PRIVATE
DEPOSITORY

SHL
WITHDRAWN

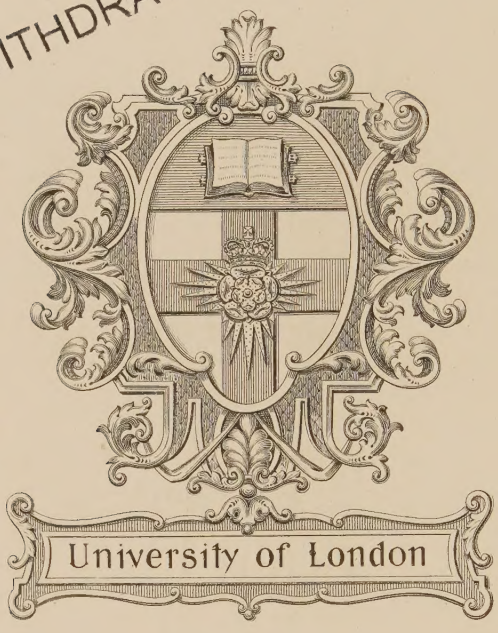

A. THOM & CO. LTD.
BINDERS.

PROCEEDINGS

OF

THE LONDON MATHEMATICAL SOCIETY

SECOND SERIES

VOLUME 7

LONDON:
PRINTED BY C. F. HODGSON & SON,
2 NEWTON STREET, KINGSWAY, W.C.;
AND PUBLISHED FOR THE SOCIETY BY
FRANCIS HODGSON, 89 FARRINGDON STREET, E.C.

1909

86/13

LONDON:
PRINTED BY C. F. HODGSON & SON,
2 NEWTON STREET, KINGSWAY, W.C.

BIBL.
LONDIN.
UNIV.

Digitized by the Internet Archive
in 2026

https://archive.org/details/london-mathematical-society-proceedings_1909_7

CONTENTS.

Records of Proceedings at Meetings, pp. iv–x.

Library [Presents to Library (p. xi), Exchanges (p. xi), International Catalogue (p. xiii)], pp. xi–xiii.

Notes and Corrections, p. xiv.

Papers published in the *Proceedings*, pp. 1–492.

Index of Proceedings at Meetings, p. 493.

Index of Papers read and Communications made during the Session 1908–1909, p. 494.

Index of Papers published in this Volume arranged according to the names of Authors, p. 495.

Index according to Subjects, p. 496.

RECORDS OF PROCEEDINGS AT MEETINGS

SESSION NOVEMBER, 1908—JUNE, 1909.

Thursday, November 12th, 1908.

ANNUAL GENERAL MEETING.

Prof. W. BURNSIDE, President, and subsequently Prof. H. M. MACDONALD, Vice-President, in the Chair.

Present twenty-one members.

Lieut.-Col. J. M. Wade was elected a member.

The President referred to the loss sustained by the Society through the death of the late Master of St. John's College, Cambridge, Dr. Charles Taylor, who was a member of the Society for thirty-six years.

The President presented the De Morgan Medal to Dr. J. W. L. Glaisher.

Mr. Grace, as Secretary, reported the number of members at the beginning of the current Session as 285. During the Session 8 new members had been elected, and 2 members had died.

Prof. Love presented the Treasurer's Report. On the motion of Mr. A. B. Basset, seconded by Lieut.-Col. A. Cunningham, the report was received.

Dr. J. G. Leathem was appointed Auditor.

The Officers and Council for the ensuing Session were elected as follows:—President, Sir Wm. Niven, K.C.B.; Vice-Presidents, Mr. A. Berry, Prof. W. Burnside, Prof. H. M. Macdonald; Treasurer, Prof. J. Larmor; Secretaries, Mr. J. H. Grace, Prof. A. E. H. Love; other members of the Council, Dr. H. F. Baker, Mr. G. T. Bennett, Mr. A. L. Dixon, Prof. E. B. Elliott, Dr. L. N. G. Filon, Dr. E. W. Hobson, Major P. A. MacMahon, Mr. H. W. Richmond, Mr. A. E. Western.

Prof. Burnside delivered his Presidential Address on the "Theory of Groups of a Finite Order."*

The following papers were communicated :—

*(i) On the Second Mean-Value Theorem of Integral Calculus, *(ii) On the Representation of a Function by a Series of Legendre's Functions : Dr. E. W. Hobson.

*The Eliminant of Three Quantics in Two Independent Variables : Mr. A. L. Dixon.

*On the Dirichlet Series and the Asymptotic Expansion of Integral Functions of Zero Order : Mr. J. E. Littlewood.

The Norm Curves on a given Base : Prof. F. Morley.

*On the Arithmetical Nature of the Coefficients in a Group of Linear Substitutions (Third Paper) : Prof. W. Burnside.

*The Conformal Transformations of a Space of Four Dimensions and their Applications to Geometrical Optics : Mr. H. Bateman.

†Periodic Properties of Partitions : Mr. D. M. Y Sommerville.

*The Solution of Integral Equations : Prof. A. C. Dixon.

*Note on the Continuity or Discontinuity of a Function defined by an Infinite Product : Mr. G. H. Hardy.

*The Energy and Momentum of an Ellipsoidal Electron : Mr. F. B. Pidduck.

(i) On q-Integration, (ii) On q-Transformations of Power Series : Rev. F. H. Jackson.

The Complete Solution in Integers of the Eulerian Equation $X^4+Y^4=U^4+V^4$: Dr. T. Stuart.

‡On Waves of Finite Amplitude : Mr. W. J. Harrison.

*An Asymptotic Formula for the Generalized Hypergeometric Series : Mr. T. J. I'A. Bromwich.

Satellite Curves of a Plane Cubic : Mr. A. C. O'Sullivan.

---

* Printed in this volume.

† Printed in this volume with the title, "On certain Periodic Properties of Cyclic Compositions of Numbers."

‡ Printed in this volume with the title, "The Influence of Viscosity and Capillarity on Waves of Finite Amplitude."

Thursday, December 10th, 1908.

Sir W. D. NIVEN, President, in the Chair.

Present twenty-one members.

Messrs. G. F. S. Hills, H. B. Heywood, W. H. Salmon were elected members.

Mr. F. M. Saxelby was admitted into the Society.

Prof. Love presented the Report of the Auditor (Dr. J. G. Leathem).

On the motion of Prof. H. Lamb, seconded by Prof. M. J. M. Hill, the Treasurer's Report was adopted, and the thanks of the Society were voted to the Treasurer and to the Auditor.

The following papers were communicated:—

*On the Theory of Waves propagated vertically in the Atmosphere: Prof. H. Lamb.

(i) *On Sir William Rowan Hamilton's Fluctuating Functions, (ii) *On the Representation of a Function by a Series of Bessel's Functions: Dr. E. W. Hobson.

*Theory of Cauchy's Principal Values (Fourth Paper): Mr. G. H. Hardy.

Note on a Continued Fraction equivalent to the Remainder after n Terms of Taylor's Series: Prof. L. J. Rogers.

Solid Angles and Potentials of Plane Discs: Mr. Balak Ram.

The Solution of the Homogeneous Linear Difference Equation of the Second Order: Mr. G. N. Watson.

*On Four Systems of Three Quaternary Quadrics that can be expressed by means of Five Squares: Prof. A. C. Dixon.

*On Differentials: Dr. W. H. Young.

(i) *On Cubic Surfaces.—The Reduction of a Quaternary Cubic from the Sum of Six Cubes to the Sum of Five, *(ii) Addition to a former Paper on the Eliminant of Three Quantics in Two Independent Variables: Mr. A. L. Dixon.

Dr. T. Stuart gave an account of a method of solution of Mersenne's problem.

---

* Printed in this volume.

Thursday, January 14th, 1909.

Sir W. D. NIVEN, President, in the Chair.

Present twenty-one members and a visitor.

Prof. H. F. Stecker was elected a member.

Mr. W. H. Salmon was admitted into the Society.

The President announced the death of Mr. G. Heppel, who was a member of the Society from 1883 to 1907.

The following papers were communicated :—

The Canonical Form of a Linear Substitution : Mr. H. Hilton.

On Octavic and Sexdecimic Residuacity : Lieut.-Col. A. Cunningham.

On Change of the Variable in a Lebesgue Integral : Dr. E. W. Hobson.

On Abel's Extension of Taylor's Series : Rev. F. H. Jackson.

*Note on the Evaluation of a certain Integral containing Bessel's Functions : Prof. H. M. Macdonald.

Mr. J. Hammond gave an account of some "Researches connected with the Solution of the Quintic Equation."

Thursday, February 11th, 1909.

Sir W. D. NIVEN, President, in the Chair.

Present seventeen members.

The following papers were communicated :—

The Conformal Transformations of a Space of Four Dimensions and the Generalization of the Lorentz-Einstein Principle : Messrs. H. Bateman and E. Cunningham.

On a certain Family of Cubic Surfaces : Mr. W. H. Salmon.

Some Fundamental Properties of a Lebesgue Integral in a Two-Dimensional Domain : Dr. E. W. Hobson.

---

* Printed in this volume.

*On the Relation between Pfaff's Problem and the Calculus of Variations: Prof. A. C. Dixon.

*(i) On Implicit Functions and their Differentials, (ii) On Indeterminate Forms: Dr. W. H. Young.

*Modular Invariants of a General System of Linear Forms: Prof. L. E. Dickson.

Thursday, March 11th, 1909.

Prof. W. BURNSIDE, Vice-President, in the Chair.

Present nineteen members.

The following papers were communicated:—

The Transformation of the Electrodynamical Equations and the Laws of Motion: Mr. H. Bateman.

The Transformation of the Electrodynamic Equations of Moving Bodies: Mr. E. Cunningham.

The Kinetic Image of a Convected Electric System formed in a Conducting Plane Sheet: Prof. J. Larmor.

*On an Integral Equation: Mr. G. H. Hardy.

On Term-by-Term Integration of Oscillating Series: Dr. W. H. Young.

Mr. A. L. Dixon gave a preliminary account of "Some Further Researches in the Theory of Elimination."

Thursday, April 22nd, 1909.

Sir W. D. NIVEN, President, in the Chair.

Present twenty members and a visitor.

The following papers were communicated:—

The Principles of the General Theory of Integral Functions: Mr. F. Tavani.

---

* Printed in this volume.

The Equations of Electrodynamics and the Null Influence of the Earth's Motion on Optical and Electrical Phenomena: Mr. H. R. Hassé.

The Solution of a certain Transcendental Equation: Mr. G. N. Watson.

The Physical Applications of certain Conformal Transformations of a Space of Four Dimensions and the Representation of a Space Time Point by means of a Sphere: Mr. H. Bateman.

Some Criteria for the Residues of Eighth and other Powers: Mr. A. E. Western.

On the Discontinuities of a Function of one or more Real Variables: Dr. W. H. Young.

Thursday, May 13*th*, 1909.

Sir W. D. NIVEN, President, in the Chair.

Present nineteen members and a visitor.

The Vicomte Robert de Montessus de Ballore was elected a member.

Mr. H. B. Heywood was admitted into the Society.

The following papers were communicated:—

Ternary Quadratic Types: Mr. H. W. Turnbull.

On Gauss's Theorem, and On the Semi-Convergence of certain Force Integrals in the Theory of Attractions: Dr. J. G. Leathem.

On the Continuity or Discontinuity of a Function defined by an Infinite Product: Mr. J. E. Littlewood.

Thursday, June 10*th*, 1909.

Sir W. D. NIVEN, President, in the Chair.

Present twelve members.

The following papers were communicated :—

On the Behaviour at the Poles of a Series of Legendre's Functions representing a Function with Infinite Discontinuities : Mr. F. J. W. Whipple.

An Analogue of Pascal's Theorem in Three Dimensions : Mr. W. H. Salmon.

Some Symbolical Expressions for the Eliminant of Two Binary Quantics : Mr. A. L. Dixon.

LIBRARY

Presents.

BETWEEN November, 1908, and October, 1909, the following presents were made to the Library, from the respective Authors or Publishers :—

Brioschi, Francesco.—"Opere Matematische," Tomo 5, Milano, 1909.
"Festskrift til H. G. Zeuthen fra venner og elever I anleding af hans 70 aars Fødseldag, 15. Februar, 1909," København, 1909.
Goupillière, Haton de la.—"Application aux mouvements Planétaire et Cométaire."
Goupillière, Haton de la.—"Surfaces Nautiloïdes," Coimbra, 1908.
Goupillière, Haton de la.—"Mémoires Divers," 2e Ed., Paris, 1909.
Schaeffer, Helen Elizabeth.—"The Study of an Electric Spark in a Magnetic Field," 1908.
Twelvetrees, W. Noble.—Simplified Methods of Calculating Reinforced Concrete Beams," 1909.

Calcutta : Indian Engineering, vol. 44, nos. 17–26, 1908 ; vol. 45 ; vol. 46, nos. 1–12, 1909.
Coimbra : Academia Polyt. de Porto, Ann. Scientificos, vol. 3, nos. 3, 4, 1908 ; vol. 4, nos. 1, 2, 1909.
Hamburg : Math. Gesellschaft Mittheilungen, bd. 4, heft 9, 1909.
Kansas : Univ. Science Bulletin, vol. 4, nos. 7–20, 1908.
London : Educational Times, vol. 61, no. 572, 1908 ; vol. 62, nos. 573–582, 1909.
London : Educational Times, Math. Questions and Solutions, vols. 14, 15, 1908–9.
London : Mathematical Gazette, vol. 4, nos. 75, 76, 1908 ; vol. 5, nos. 77–80, 1909.
London : Nautical Almanac for 1912.
London : Scientific Monthly, vol. 1, nos. 5–12 ; vol. 2, no. 1, 1908–9.
Madras : Indian Mathematical Club, Journal, vol. 1, nos. 1–4, 1909.
Madras : Indian Mathematical Club, Progress Reports, nos. 7, 8, 1908.
Paris : L'Enseignement Math., ann. 10, no. 6, 1908 ; ann. 11, nos. 1–5, 1909.
Tokyo : Sūgaku-Butsurigaku, vol. 4, nos. 14, 15, 19–22, 1908 ; vol. 5, nos. 1–6, 1909.
Warsaw : Wiadomości Matem., tom 12, zeszyt 5, 6, 1908 ; tom 13, zeszyt 1–4, 1909.

Exchanges.

Between November, 1908, and October, 1909, the following exchanges were received :—

American Journal of Mathematics, vol. 31, nos. 1–3, 1909.
American Mathematical Society, Transactions, vol. 10, nos. 1–3, 1909.
American Mathematical Society, Bulletin, vol. 15, nos. 3–10, 1908–9; vol. 16, no. 1, 1909.
American Philosophical Society, Proceedings, vol. 47, no. 190, 1908 ; vol. 48, no. 191, 1909.
Amsterdam : Nieuw Archiev, deel 81, stuk 4, 1909.
Amsterdam : Revue Semestrielle, tome 17, pt. 1, 1909.

Amsterdam: Wiskundige Opgaven, deel 10, stuk 2, 3, 1908.
Belgique: Académie Royale des Sciences, Bulletin, 1908, nos. 7–12; 1909, nos. 1–8.
Berlin: Jahrbuch über die Fortschritte, bd. 37, hefte 2, 3, 1908; bd. 38, heft 1, 1909.
Berlin: Journal für die Mathematik, bd. 133–136, 1908–9.
Berlin: Sitzungsberichte der K. Preuss. Akademie, 1908, nos. 40–53; 1909, nos. 1–29.
Bordeaux: Société des Sciences, Mémoires, sér. 6, tome 4, cah. 1, 2, 1908.
Bordeaux: Société des Sciences, Procès-Verbaux, 1907–8.
Bordeaux: Société des Sciences, Bulletin de la Commission Météorologique du Département de la Gironde, 1907, pt. 2.
Boston: American Academy of Arts and Sciences, vol. 43, no. 22, 1908; vol. 44, nos. 1–25, vol. 45, no. 1, 1909.
Calcutta: Mathematical Society, Bulletin, vol. 1, no. 1, 1909.
Cambridge Philosophical Society, Proceedings, vol. 14, pt. 6, 1908; vol. 15, pts. 1–3, 1909.
Cambridge Philosophical Society, Transactions, vol. 21, pts. 5–8, 1908.
Cambridge, Mass.: Annals of Mathematics, vol. 10, nos. 2–4, 1909.
Canadian Institute, Transactions, nos. 17, 18, 1906–9.
Catania: Accademia Gioenia, Atti, Ser. 4, vol. 20, 1907.
Catania: Accademia Gioenia, Bollettino, 1908, fasc. 3–8.
Dublin: Royal Irish Academy, Proceedings, vol. 27, nos. 3–9, 1907–8.
Edinburgh: Mathematical Society, Proceedings, vol. 25, 1907.
Edinburgh: Royal Society, Proceedings, vol. 27, 1907; vol. 28, nos. 1, 2, 1908.
Erlangen: Physik.-medicin. Societät, Sitzungsberichte, bd. 39, 1908.
France: Société Mathématique, Bulletin, tome 36, fasc. 4, 1908; tome 37, fasc. 1–3, 1909.
Göttingen: Königl. Gesell. der Wissenschaften, Nachrichten, Math. Klasse, 1908, heft 4; 1909, hefte 1–2.
Göttingen: Königl. Gesell. der Wissenschaften, Nachrichten, Geschaft. Mitth., 1908, heft 2; 1909, heft 1.
La Haye: Archives Néerlandaises, tome 14, liv. 1–4, 1909.
Leipzig: Beiblätter zu den Annalen der Physik, bd. 32, hefte 22–24, 1908; bd. 33, hefte 1–18, 1909.
Leipzig: K. Sächsische Gesell., Math. Klasse, Abhandlungen, bd. 30, nos. 4, 5, 1908.
Leipzig: K. Sächsische Gesell., Math. Klasse, Berichte, 1908, nos. 3–8; 1909, nos. 1–3.
Livorno: Periodico di Matematica, anno 24, fasc. 3–6, 1908; anno 25, fasc. 1, 1909.
Livorno: Periodico di Matematica, Supplemento, anno 12, fasc. 1–9, 1908–9.
London: Institute of Actuaries, Journal, vol. 41, pts. 2–4, 1907; vol. 42, pt. 1, 1908.
London: Institution of Naval Architects, Transactions, vol. 48, 1907.
London: Nature, vols. 79, 1908; vol. 80 and vol. 81, nos. 2070–2082, 1909.
London: Nat. Physical Laboratory, Transactions, 1907.
London: Nat. Physical Laboratory, Report for 1908.
London: Royal Society, Proceedings, Series A, vol. 81, nos. 549, 550, 1908; vol. 82, nos. 551–557, 1909.
London: Royal Society, Transactions, Series A, vol. 208, 1908.
London: Physical Society, Proceedings, vol. 21, pts. 3, 4, 1909.
Manchester Literary and Philosophical Society, Memoirs, vol. 51, pts. 2, 3, 1907; vol. 52, pt. 1, 1908.
Marseille: Annales de la Faculté des Sciences, tome 16, 1908; tome 17, 1909.
Napoli: Accademia delle Scienze, Rendiconti, vol. 14, fasc. 4–12, 1908; vol. 15, fasc. 1, 2, 1909.
Odessa: Société des Naturalistes, tome 30, 1908; tome 31, 1909.
Palermo: Rendiconti del Circolo Matematico, tome 26, fasc. 3, 1908; tome 27, 1909; tome 28, fasc. 1, 2, 1909.
Paris: Bulletin des Sciences Mathématiques, tome 32, Sept.–Dec., 1908; tome 33, Jan.–July., 1909.
Roma: Reale Accademia dei Lincei, Rendiconti, vol. 17, sem. 2, fasc. 8–12, 1908; vol. 18, sem. 1 and sem. 2, fasc. 1–4.

Roma: Reale Accademia dei Lincei, Rendiconti delle Sedute Solenni, vol. 2, pp. 395–442. 1909.
Stockholm: Acta Mathematica, bd. 32, pts. 1–3, 1909.
Torino: R. Accademia delle Scienze, Atti, vol. 44, disp. 1–15, 1909.
Torino: R. Accademia delle Scienze, Memorie, ser. 2, tome 59, 1909.
Toulouse: Faculté des Sciences, Annales, tome 10, fasc. 1, 2, 1909.
Warsaw: Prace Matematyczno-Fizyczne, tome 19, 1908.
Wien: Monatshefte für Mathematik, jahr 20, 1909.
Zurich: Vierteljahrsschrift, hefte 1–4, 1908; hefte 1, 2, 1909.

International Catalogue of Scientific Literature.

In the year April, 1908, to March, 1909 (inclusive), the following exchanges were sent in the first instance to Prof. Love to be indexed for the International Catalogue of Scientific Literature:—

"Proceedings of the Edinburgh Mathematical Society," Vol. XXVI., 1908.

"Transactions of the Institution of Naval Architects," London, 1908.

"Journal of the Institute of Actuaries," Vol. XLII., Pts. 2–4, and Vol. XLIII., Pt. 1; 1908–9.

"Proceedings of the Manchester Literary and Philosophical Society," Vol. LII., Pts. 2 and 3, Vol. LIII., Pt. 1, 1908.

"Proceedings of the Royal Society of Edinburgh," Vol. XXVIII., Pts. 3–9, Vol. XXIX., Pts. 1 and 2, 1908–9.

The following were also sent for the purposes of the Catalogue:—

"Mathematical Gazette," Nos. 71–77; London, 1908–9.

"Educational Times," Nos. 564–575; London, 1908–9.

"Journal of the Royal Statistical Society," Vol. LXXI., Pt. 4; London, 1908.

"Proceedings of the Royal Irish Academy," Vol. XXVII., Section A, No. 10, 1909.

"Transactions of the Insurance and Actuarial Society of Glasgow," Ser. 6, Nos. 6, 7, 1907–8.

"Transactions of the Royal Society of Edinburgh," Vol. XLVI., Pt. 3, No. 20, 1908.

NOTES AND CORRECTIONS.

Mr. Hardy sends the following Note on § 12 of his paper "The Multiplication of Conditionally Convergent Series" (*Proceedings*, Vol. 6, p. 410):—

Prof. Elliott has kindly pointed out to me an ambiguity in one of my statements in this section. On p. 421, l. 12, I say "the theorem is *not* true if the condition $b_n \to 0$ is removed," and a little lower down I give an example in which "*C* oscillates, but *not between the limits* prescribed by the theorem." I should have said, to make my meaning absolutely clear "but *its limits of oscillation are not those* prescribed by the theorem." As Prof. Elliott points out, it is always true, whether $b_n \to 0$ or not, that the limits of oscillation are *at most as wide* as those prescribed by the theorem. This result was proved by Prof. Elliott some time ago and set as a problem in an examination. My result gives the *exact* limits of oscillation in a particular case, viz., when $b_n \to 0$.

Dr. Hobson sends the following corrections of his paper "On the Representation of a Function by Series of Bessel's Functions" (*supra*, p. 359):—

P. 361, l. 13. The upper limit of the integral on the right-hand side should be "$\lambda^{\frac{1}{2}}$."

P. 378, l. 17. The first function in the integral should be "$\Phi(x')$," *not* "$\phi(x')$."

P. 385, l. 9. *For* "$(\alpha-\mu^2, \beta+\mu^2)$," *read* "$(\alpha-\mu^{\frac{1}{2}}, \beta+\mu^{\frac{1}{2}})$."

P. 385, ll. 16, 17. The limits in the integrals should be "$z-\mu^{\frac{1}{2}}, z+\mu^{\frac{1}{2}}$," *not* "$z-\mu^2, z+\mu^2$."

PAPERS

PUBLISHED IN THE

PROCEEDINGS OF THE LONDON MATHEMATICAL SOCIETY

ON THE THEORY OF GROUPS OF FINITE ORDER

By W. Burnside.

(*Presidential Address.*)

[Delivered at the Annual General Meeting, November 12th, 1908.]

It has been suggested to me that I should take advantage of the present occasion to give an account of the recent progress of the theory of groups of finite order. That very considerable advance has been made in the last twenty, and especially in the last ten years, is undoubtedly the case. That advance, however, has been in a great variety of directions, and it is probably too soon, as yet, to present its different parts in their proper proportion and perspective. It would not, I think, be possible to do at the present time for the theory of groups of finite order what was done so ably for the allied theory of algebraic numbers by Prof. Hilbert in his report of 1897.

But a more serious objection to any attempt on my part to give, on the present occasion, an account of the recent advance in the theory is that such an account would certainly be uninteresting to a considerable number of my audience. It is undoubtedly the fact that the theory of groups of finite order has failed, so far, to arouse the interest of any but a very small number of English mathematicians; and this want of interest in England, as compared with the amount of attention devoted to the subject both on the Continent and in America, appears to me very remarkable. I propose to devote my address to a consideration of the marked difference in the amount of

attention devoted to the subject here and elsewhere, and to some attempt to account for this difference.

It is to our younger students that one would naturally look for a shew of interest in a practically new subject, for such the theory of groups in its modern developments actually is. Unfortunately it is the case that so far one has looked almost in vain. The subject, under the head "Theory of Equations, including the Theory of Substitutions," has formed part of the schedule for Part II. of the Mathematical Tripos since 1887. In the twenty-one years during which these regulations with modifications have been in force, questions directly on the theory of groups of finite order have been proposed on four occasions only; and while this shews that except on those four occasions no candidates have taken up the subject, anyone who has had experience in examining in the Mathematical Tripos will know that there have not necessarily been even four candidates who have made a serious study of the subject. At Oxford questions on the subject have appeared on one or two occasions in the examination for the Senior Mathematical Scholarship. The evidence of examinations, then, so far as it goes, is clearly that our younger mathematicians do not study the subject. As regards teaching, the evidence is even more pronounced. So far as I have been able to learn no course of lectures has ever been delivered either at Oxford or at Cambridge on the theory of groups of finite order. Moreover, in courses on the theory of algebraic equations, the amount of group-theory introduced is very small, as also is the number of students attending such lectures. In fact, so far as the teaching of the subject in England is concerned, one may say that it does not exist. The following facts, which I owe to the kindness of correspondents, will shew that abroad and in America the state of things is very different.

In Paris, M. Jordan gives a course on the theory of groups of finite order at the Collège de France at regular intervals to an average class of six students, while the Galois theory of equations is lectured on at the Sorbonne and the Ecole Normale, as well as at one or two of the provincial Universities.

In most German Universities the regular course of lectures on algebra, attended by large classes of students, contains an exposition of the more elementary parts of the theory of groups of permutations. In addition to this there are, in all the larger Universities, special courses devoted to groups of finite order, and to discontinuous groups, which attract a considerable number of students. For instance, such special courses last year were attended at Göttingen by thirty students, and at Freiburg by twelve.

In the United States all the leading Universities offer regular courses in the theory of groups of finite order, with the exception of Harvard, where a course is given on the Galois theory of equations. In some cases

the course is a yearly one, and in others it is biennial. These courses attract from two or three up to ten or twelve students, who, in general, have already taken the B.A. degree.

As regards the teaching of the subject, then, the contrast between the state of things in this country and abroad is sufficiently striking. Though it may possibly be the case that elsewhere the demand for the teaching has been to some extent created by a persistent supply, there can be no doubt that, if even a quite small number of our senior mathematical students at the Universities wished for courses of lectures on group-theory, the supply would be forthcoming. Can any adequate reason be given, then, to account for the entire lack of any such demand? The objection that the subject has at present no obvious applications to matters of practical interest is one which may be, and has been, made to other branches of pure mathematics—for instance, to the theory of forms—which nevertheless attract a considerable number of students. The abstract nature of the subject, and the difficulty of seeing at first what it can lead to, and how it is capable of any great extent of development, have also been suggested as deterrents to a beginner; but these points again are not found to prevent students from becoming rapidly interested in other branches of pure mathematics. Moreover, the theory of groups of finite order has, from a beginner's point of view, one distinct matter in its favour, viz., that there is no complicated notation to be learnt, that used being almost self-explanatory from the start. Why, then, again the almost total neglect of the subject?

In my belief it is, to a considerable extent, due to the fact that, in the teaching of junior students, opportunities which occur for familiarising them with the ideas that are fundamental in group-theory, when those ideas present themselves in simple form, are not taken advantage of. It is the results, and not the processes which lead to the results, on which their attention is mainly fixed; *e.g.*, the product, and not the act of multiplication, when once the latter has ceased to be a vexation. So long as the processes are arithmetical or algebraical, the separation of the process from its operand, and the point of view from which the process is regarded as a definite operation that can be effected on any operand, is one which the young mind grasps with difficulty, if at all. But in the more concrete field of geometry this is, I think, not so. Thus, to take a very simple example, when inverse points with respect to a circle have been defined, the operation of inversion with respect to a circle, regarded as a process for passing from any given plane figure to its inverse, is one which the beginner should grasp at once, aided, if necessary, by the fact that there is an instrument (a Peaucillier's cell), by the use of which the

operation can always be effected ; and the statement that inversion with respect to a circle is an operation of order two should have a perfectly definite and simple geometrical meaning for him. But of the students who will use the process of inversion with skill in dealing with some particular geometrical problem, how many ever form this idea of the process and learn to regard it apart from the special result they have to prove? So with plane kinematics, translations and rotations should be presented as operations which can be carried out on any plane figure, quite independently of its size and position ; and the student would thus obtain further conceptions of operations of finite order, and of the distinction between those of finite and those not of finite order. Moreover, without going beyond the powers of a junior student, the idea of a cyclical group arising from a rotation of finite order, and of the dihedral group on which the theory of the kaleidoscope depends, might well be dealt with. The point I wish to emphasize is that, by attending to the actual processes, as well as to the results of the various elementary geometrical constructions that have to be presented to a student, he would be led to acquire quite naturally, at an early stage, ideas and points of view which at present he in general misses ; and for want of which, later on, group-theory may entirely fail to appeal to him.

At a somewhat later stage, when the student has passed from elementary to projective geometry, a projective transformation, either of the plane or of space, should be presented to him (it hardly ever is) as a definite operation to be performed on any geometrical figure, the process being independent of the figure. As a further illustration of what might be done at this stage, the set of twenty-four collineations which transform a quadrangle into itself might be considered. They form a group which is, of course, abstractly equivalent to that of the permutations of four symbols. But while in the latter form the problem presented would to many minds be almost repulsive in its naked formality, the study of the quadrangle, from the point of view of the set of collineations for which it is invariant, could hardly fail to appeal to a mind with a geometrical bent. At each stage in his progress, especially on the geometrical side, the student whose preparation has been suitable would find, without going aside from the beaten track, further problems in which geometrical and group-theory interests are combined.

The remarks that have been made are not intended to suggest that the details of group-theory are suitable subjects for teaching in the earlier parts of a student's course. Neither is the theory of forms. But just as from a quite early stage, some of the fundamental ideas of the latter, *e.g.*, the idea of invariance, is introduced ; so should be the fundamental ideas

of the former, and, when the opportunity offers, these should be illustrated by simple applications. Were this done systematically, the student's outlook would become wider than it generally is at present. He would gradually recognize that all the processes he uses may be regarded, each set in its own connection, as combining together according to definite laws; in fact, he would naturally, as a necessary result of his training, be led to what can only be described as the group-theory point of view. As things are at present a student, who approaches the study of group-theory, has in general had no such preliminary training. His mind is not already stored with a number of particular cases which lead up to interest in a general theory, and it is probable that he is often, in consequence, repelled from the subject by a too early presentment of the purely formal side of the theory.

The statement that from three symbols E, A, B obeying the associative law of multiplication, and the relations

$$E^2 = A^2 = B^3 = (AB)^5 = E,$$

$$EA = AE = A, \qquad EB = BE = B,$$

just sixty distinct products can be formed (this is a formal statement involving all the properties of the icosahedral group), looks on the face of it as affording a merely curious illustration of non-commutative multiplication, while a proposal to verify the statement appears equivalent to proposing a series of conundrums. There would be nothing here to attract the student or to suggest anything but the driest formalism utterly divorced from any of his previous mathematical studies. Now the treatises which deal directly with the theory of groups of finite order, all begin more or less from the formal side. It is not, of course, the case that the student is confronted immediately with statements like the one just made. Nevertheless he has to begin by grasping a whole series of new ideas, such as group, sub-group, conjugate set, factor-group, isomorphism, presented to him in a purely abstract form; and the concrete illustrations which will connect these new ideas, in some directions, with matters with which he is already familiar come later.

No one has yet attempted to do for the student of this subject what has been done so brilliantly by Sir George Greenhill for the student of elliptic functions. Sir George Greenhill begins with the pendulum, presenting to the reader the one physical problem which a student of pure mathematics is almost sure to know something about; and he says in effect, if not in so many words—the horizontal distance of the bob of a pendulum from the vertical through the point of support is an elliptic function of the time. The reader has before him immediately a concrete example of an elliptic function, con-

nected with more or less familiar ideas, to excite his interest and to draw him on. Sooner or later, if he is a pure mathematician, he will be led to the doubly connected Riemann's surface, the integrals upon it, and the class of algebraic functions connected with it.

It is true, as I have already stated, that no one has done for the various applications of groups of finite order what Sir George Greenhill has done for the applications of elliptic functions. Still, in this connection, a book must be referred to which offers probably the most perfect example we have of the application of a mathematical theory to a particular problem. That book is Prof. Klein's *Vorlesungen über das Icosaeder und die Auflösung der Gleichungen vom fünften Grade*. It was published twenty-four years ago, and for that reason perhaps is not very well known to our younger mathematicians. It forms the first of a series of works dealing with the general theory of automorphic functions; but, as it is exclusively concerned with the case in which the functions are algebraic, it is self-contained and makes no excessive demand for previous knowledge on the part of the reader. The latter part of the book gives a beautiful and masterly treatment of the equation of the fifth degree by means of the icosahedral function; but what I wish specially to draw attention to is that the earlier part forms an ideal introduction to the theory of groups of finite order.

The one kind of geometrical operation which can be dealt with directly and simply in an experimental way is the displacement of a solid body. One can take a solid body in one's hands and determine by actual experiment the various displacements of which it is capable without altering the position of its bounding surface. The groups of rotations of the regular solids give therefore the most concrete illustrations of groups of finite order. They are amenable to direct experimental treatment. It is these with which Prof. Klein deals. They are first considered from the geometrical, or experimental, point of view. Then the groups of linear transformations which are equivalent to them, which are, in fact, their translation into analysis, are introduced. Lastly, the functions which are invariant for these groups of linear transformations are determined, and the relations between them obtained. The reader is led naturally from the concrete to the abstract, and acquires by actual instances the new ideas necessary to the theory. He is shewn from the beginning the various lines of interest that open out and the points in which the theory is naturally connected with other branches of pure mathematics. His attention is not distracted by the purely formal developments of the theory which necessarily constitute so large a part of any treatise on the theory of finite groups in general.

The latter part of Prof. Klein's book is devoted to a special problem, viz., the solution of the quintic equation. This may or may not appeal to any given pure mathematician. I am sure, however, that such general knowledge of the theory of groups of finite order as is to be gained by a study of the first part, ought to form part of the equipment of every pure mathematician; and, until the subject is included among those lectured on at the Universities, I know of no better book from which to obtain such general knowledge than that of Prof. Klein.

I wish, in conclusion, to appeal to those who have the teaching of our younger pure mathematicians to do something to stimulate the study of group-theory in this country. If, when advice is given for the course of study to be pursued, the importance of some knowledge of group-theory for a pure mathematician (which is generally recognized elsewhere) were insisted on, there is little doubt but that a demand for the serious teaching of the subject would soon arise.

ON THE ARITHMETICAL NATURE OF THE COEFFICIENTS IN A GROUP OF LINEAR SUBSTITUTIONS

(THIRD PAPER)

By W. BURNSIDE.

[Received September 24th, 1908.—Read November 12th, 1908.]

THIS paper, though concerned with the nature of the coefficients in groups of linear substitutions, is not directly connected with my two earlier papers on the same subject. In a memoir, "Ueber die charakteristischen Einheiten der symmetrischen Gruppe" (*Berliner Sitzungsberichte*, 1903, p. 328), Herr Frobenius has shewn that every irreducible representation of the symmetric group of degree n can be presented in a form in which the coefficients are rational numbers. Quite recently (*Berliner Sitzungsberichte*, 1908, pp. 664–678), Dr. Schur, also dealing with the various representations of the symmetric group, has proved that they can always be thrown into a form in which the coefficients are rational integers. The particular result thus obtained by Dr. Schur for representations of the symmetric group is, in fact, true generally. A group of linear substitutions of finite order, whose coefficients are rational numbers, can always be transformed so that the coefficients are rational integers. The present paper gives a proof of a rather more general theorem, which contains this as a special case, together with an extension to certain cases in which the coefficients belong to a given algebraic corpus.

The method by which the theorem is proved was suggested by a process used by Herr Minkowski in his *Geometrie der Zahlen* (p. 172), which he describes as "Reduction eines Zahlengitters in Bezug auf gegebene Richtungen."

1. Let $$x_i' = \sum_{j=1}^{j=n} c_{ijk} x_j \quad (i = 1, 2, \ldots, n)$$

be the substitutions of a linear group on n variables, the suffix k distinguishing the different substitutions. Suppose, moreover, that the coefficients c_{ijk} are rational numbers with a finite least denominator d.

Any particular set of values of the variables $(a_1, a_2, \ldots, a_n)$ will be called

a point, the a's themselves being its coordinates. If the coordinates of a point and of all those points into which it is transformed by all the substitutions of the group are integers, the point will be called an "integral point." That, under the given conditions, there are integral points is obvious; in fact

$$(d,\ d,\ \ldots,\ d)$$

is an integral point. Further, it is obvious that, if

$$(a_1,\ a_2,\ \ldots,\ a_n) \quad \text{and} \quad (b_1,\ b_2,\ \ldots,\ b_n)$$

are integral points, so also is

$$(\lambda a_1+\mu b_1,\ \lambda a_2+\mu b_2,\ \ldots,\ \lambda a_n+\mu b_n),$$

where λ, μ are any integers. The totality of integral points are permuted among themselves by every substitution of the group.

Let a_{11} be the smallest positive number such that $(a_{11},\ 0,\ 0,\ \ldots,\ 0)$ is an integral point. Then, if $(\alpha,\ 0,\ 0,\ \ldots,\ 0)$ is an integral point, α is a multiple of a_{11}; for, if it were not, integers λ, μ could be found such that $\lambda a_{11}+\mu\alpha$ would be less than a_{11}.

Of all integral points of the form

$$(\alpha,\ \beta,\ 0,\ 0,\ \ldots,\ 0),$$

let

$$(a_{21},\ a_{22},\ 0,\ 0,\ \ldots,\ 0)$$

be one in which a_{22} is positive and as small as possible. Then β must be equal to or be a multiple of a_{22}; for, if not, integers λ, μ could be found such that

$$(\lambda\alpha+\mu a_{21},\ \lambda\beta+\mu a_{22},\ 0,\ 0,\ \ldots,\ 0)$$

would have its second coefficient smaller than a_{22}. Inasmuch as

$$(\lambda a_{11}+a_{21},\ a_{22},\ 0,\ 0,\ \ldots,\ 0)$$

is an integral point, a_{21} can be chosen so as to be numerically not greater than a_{11}; but this is immaterial for the present purpose.

Of all integral points of the form

$$(\alpha,\ \beta,\ \gamma,\ 0,\ \ldots,\ 0),$$

let

$$(a_{31},\ a_{32},\ a_{33},\ 0,\ \ldots,\ 0)$$

be one in which the third coefficient is positive and as small as possible. Then, as before, γ must be a multiple of a_{33}.

In this way a set of n integral points

$$\begin{gathered}(a_{11},\ 0,\ 0,\ \ldots,\ 0),\\ (a_{21},\ a_{22},\ 0,\ \ldots,\ 0),\\ \ldots\quad\ldots\quad\ldots\\ (a_{n1},\ a_{n2},\ a_{n3},\ \ldots,\ a_{nn}),\end{gathered}$$

is formed. Suppose now that

$$(A_1,\ A_2,\ \ldots,\ A_n)$$

is any integral point. Then A_n is a multiple of a_{nn}, say

$$A_n = X_n a_{nn},$$

and $$(A_1 - X_n a_{n1},\ A_2 - X_n a_{n2},\ \ldots,\ A_{n-1} - X_n a_{n,n-1},\ 0)$$

is an integral point. Hence $A_{n-1} - X_n a_{n,n-1}$ is a multiple of $a_{n-1,n-1}$; say

$$A_{n-1} = X_{n-1} a_{n-1,n-1} + X_n a_{n,n-1}.$$

Proceeding thus, it is shewn that

$$\begin{aligned} A_1 &= X_1 a_{11} + X_2 a_{21} + \ldots + X_n a_{n1}, \\ A_2 &= \qquad X_2 a_{22} + \ldots + X_n a_{n2}, \\ &\ldots \quad \ldots \quad \ldots \quad \ldots \quad \ldots \\ A_n &= \qquad\qquad\qquad X_n a_{nn}; \end{aligned}$$

so that the coordinates of every integral point can be represented in the form given by these equations with integral values for the X's; while, conversely, if the X's are integers, a point whose coordinates is given by these equations in an integral point.

Introduce now in the substitutions of the group new variables given by

$$\begin{aligned} x_1 &= X_1 a_{11} + X_2 a_{21} + \ldots + X_n a_{n1}, \\ x_2 &= \qquad X_2 a_{22} + \ldots + X_n a_{n2}, \\ &\ldots \quad \ldots \quad \ldots \quad \ldots \quad \ldots \\ x_n &= \qquad\qquad\qquad X_n a_{nn}; \end{aligned}$$

and let

$$X_i' = \sum_{j=1}^{j=n} C_{ijk} X_j \quad (i = 1,\ 2,\ \ldots,\ n)$$

be the new form of the substitutions of the group. Then, if $X_1, X_2, \ldots, X_n$ are any integers, $(x_1,\ x_2,\ \ldots,\ x_n)$ is an integral point. Therefore $(x_1',\ x_2',\ \ldots,\ x_n')$ any transformed point is also an integral point, and hence $X_1',\ X_2',\ \ldots,\ X_n'$ are integers. Put

$$X_1 = X_2 = \ldots = X_{j-1} = X_{j+1} = \ldots = X_n = 0,$$

$$X_j = 1.$$

Then $C_{ijk} = X_i'$, an integer.

In the form of the group so transformed, the coefficients are therefore all integers. Hence:

THEOREM.—If, in a group of linear substitutions on a finite number of symbols, the coefficients are rational numbers with a finite least common denominator, the group can be so transformed that the coefficients become rational integers.

COR.—A group of linear substitutions of finite order, the coefficients in which are rational numbers, can always be so transformed that the coefficients become rational integers.

For, in this case, the number of substitutions being finite, the condition that the coefficients have a finite least common denominator is necessarily satisfied.

2. Suppose now that the coefficients c_{ijk} in the substitutions of a group of linear substitutions

$$x_i' = \sum_{j=1}^{j=n} c_{ijk} x_j \quad (i = 1, 2, \ldots, n)$$

on n variables belong to a given algebraic corpus. Let $\omega_1, \omega_2, \ldots, \omega_m$ be an integral basis of the corpus, so that each coefficient can be expressed in the form

$$a_1\omega_1 + a_2\omega_2 + \ldots + a_m\omega_m,$$

where $a_1, a_2, \ldots, a_m$ are rational numbers; and suppose that all the a's entering in the coefficients of the substitutions of the group have a least common denominator d. A "point" $(a_1, a_2, \ldots, a_n)$ will here be called an "integral point" if its coordinates and those of all the points into which it is transformed by the substitutions of the group are integers of the corpus. As before

$$(d, d, \ldots, d)$$

is an integral point. Consider now the totality of the integral points of of the form

$$(a_i, 0, 0, \ldots, 0) \quad (i = 1, 2, \ldots).$$

The set of integers

$$a_1, a_2, \ldots$$

define an ideal of the corpus; and

$$(a, 0, 0, \ldots, 0)$$

is an integral point if, and only if, a belongs to this ideal. If this ideal belongs to the principal class, there is an integer a_{11} such that all numbers belonging to the ideal are integral multiples of a_{11}; and then

$$(a, 0, 0, \ldots, 0)$$

is an integral point if, and only if,

$$a = \lambda a_{11},$$

where λ is an integer of the corpus.

Consider next the totality of the integral points of the form

$$(b_i, c_i, 0, \ldots, 0) \quad (i = 1, 2, \ldots).$$

The set of integers

$$c_1, c_2, \ldots$$

again define an ideal. If this belongs to the principal class and arises

from the integer a_{22}, then among the integral points of the form considered there must be one at least

$$(a_{12},\ a_{22},\ 0,\ \ldots,\ 0)$$

in which the second coefficient is a_{22}, and

$$(b,\ c,\ 0,\ \ldots,\ 0)$$

will be an integral point if, and only if,

$$c = \lambda a_{22},$$

where λ is an integer of the corpus, while

$$b - \lambda a_{12} = \mu a_{11},$$

where μ is also an integer of the corpus.

This process may be continued and, if at each stage the ideal introduced belongs to the principal class, there is obtained a set of integral points

$$\begin{aligned}
&(a_{11},\ 0,\ \ 0,\ \ \ldots,\ 0),\\
&(a_{12},\ a_{22},\ 0,\ \ \ldots,\ 0),\\
&\quad\ldots\qquad\ldots\qquad\ldots\\
&(a_{1n},\ a_{2n},\ a_{3n},\ \ldots,\ a_{nn}),
\end{aligned}$$

such that every integral point has coordinates of the form

$$\begin{aligned}
A_1 &= X_1 a_{11} + X_2 a_{12} + \ldots + X_n a_{1n},\\
A_2 &= \qquad X_2 a_{22} + \ldots + X_n a_{2n},\\
&\ldots \quad \ldots \quad \ldots \quad \ldots \quad \ldots\\
A_n &= \qquad\qquad\qquad X_n a_{nn},
\end{aligned}$$

where $X_1, X_2, \ldots, X_n$ are integers of the corpus, while, if the X's are any integers of the corpus, the point is an integral point. It thus follows exactly as in the previous section that, when new variables are introduced, defined by

$$\begin{aligned}
x_1 &= X_1 a_{11} + X_2 a_{12} + \ldots + X_n a_{1n},\\
x_2 &= \qquad X_2 a_{22} + \ldots + X_n a_{2n},\\
&\ldots \quad \ldots \quad \ldots \quad \ldots \quad \ldots\\
x_n &= \qquad\qquad\qquad X_n a_{nn},
\end{aligned}$$

the coefficients in the group so transformed are integers of the corpus.

It is probably not possible to determine in any particular case whether the ideals in question are principal ideals or not without carrying out the actual calculations. There is, however, a not inconsiderable class of cases in which the process certainly applies—viz., those where the corpus in question has only a single class of ideals. Thus there results the following :—

THEOREM.—If the coefficients in a group of linear substitutions are

numbers of an algebraic corpus with a single ideal class, and if each coefficient can be expressed in the form γ/δ, where γ is some integer of the corpus and δ is an assigned integer of the corpus, the same for all the coefficients, then the group can be so transformed that all the coefficients are integers of the corpus.

In particular, a group of linear substitutions of finite order, whose coefficients belong to an algebraic corpus with a single ideal class, can be so transformed that its coefficients become integers of the corpus.

3. In illustration of the process described above, a simple case may be worked out in detail. The group of order 120 on two variables, which in respect of a self-conjugate operation of order 2 is isomorphic with the icosahedral group, is generated by

$$x_1' = \epsilon^3 x_1, \qquad \sqrt{5}\, x_1' = -(\epsilon-\epsilon^4)x_1 + (\epsilon^2-\epsilon^3)x_2;$$
$$x_2' = \epsilon^2 x_2, \qquad \sqrt{5}\, x_2' = \quad (\epsilon^2-\epsilon^3)x_1 + (\epsilon-\epsilon^4)x_2;$$

where ϵ is a fifth root of unity.

The totality of the substitutions* are given by

$$x_1' = \pm\epsilon^{3\mu}x_1, \qquad x_1' = \mp\epsilon^{2\mu}x_2;$$
$$x_2' = \pm\epsilon^{2\mu}x_2, \qquad x_2' = \pm\epsilon^{3\mu}x_1;$$
$$\sqrt{5}\, x_1' = \pm\epsilon^{3\nu}\left(-(\epsilon-\epsilon^4)\epsilon^{3\mu}x_1 + (\epsilon^2-\epsilon^3)\epsilon^{2\mu}x_2\right);$$
$$\sqrt{5}\, x_2' = \pm\epsilon^{2\nu}\left((\epsilon^2-\epsilon^3)\epsilon^{3\mu}x_1 + (\epsilon-\epsilon^4)\epsilon^{2\mu}x_2\right);$$
$$\sqrt{5}\, x_1' = \mp\epsilon^{2\nu}\left((\epsilon^2-\epsilon^3)\epsilon^{3\mu}x_1 + (\epsilon-\epsilon^4)\epsilon^{2\mu}x_2\right);$$
$$\sqrt{5}\, x_2' = \pm\epsilon^{3\nu}\left(-(\epsilon-\epsilon^4)\epsilon^{3\mu}x_1 + (\epsilon^2-\epsilon^3)\epsilon^{2\mu}x_2\right).$$

Since $\sqrt{5} = (\epsilon+\epsilon^2)(1-\epsilon)^2$, where $\epsilon+\epsilon^2$ is a unit of the corpus, it is obvious that a_{11} is $1-\epsilon$. Further, it is found on trial that a_{22} is 1, while a_{12} is congruent to $-3 \pmod{1-\epsilon}$.

The substitution, therefore, is

$$x_1 = (1-\epsilon)X_1 - 3X_2, \qquad x_2 = X_2.$$

The two generating substitutions, expressed in terms of the new variables, are

$$X_1' = \epsilon^3 X_1 + 3\epsilon^2 X_2, \qquad X_1' = (1+2\epsilon+2\epsilon^3)X_1 - 2(\epsilon-\epsilon^2+\epsilon^3)X_2;$$
$$X_2' = \qquad \epsilon^2 X_2, \qquad X_2' = (1+\epsilon+\epsilon^3)X_1 - (\epsilon-\epsilon^2+\epsilon^3-\epsilon^4)X_2,$$

and have integral coefficients, as they should.

* Cf. Klein's *Vorlesungen über das Icosaeder*.

ON THE SECOND MEAN-VALUE THEOREM OF THE INTEGRAL CALCULUS

By E. W. HOBSON.

[Received October 4th, 1908.—Read November 12th, 1908.]

THE second mean-value theorem in the two forms, one of which is due to Bonnet, and the other to Du Bois-Reymond and Weierstrass, is a very valuable instrument in analysis as affording a means of estimating the values of definite integrals. The theorem relates to the integral of the product of two functions $f(x)$, $\phi(x)$ defined for an interval (a, b); the first of these functions being limited and monotone in the interval. A considerable number of proofs of the theorem have been given,* of varying degrees of generality as regards the nature of the function $\phi(x)$.

In the first part of the present communication a simple proof of the theorem is given, in which the only restriction imposed upon the function $\phi(x)$ is that it possesses a Lebesgue integral in the interval (a, b).

The only other case which remains for consideration is that in which $\phi(x)$ possesses only a non-absolutely convergent improper integral in (a, b). The definition usually employed, of late years, for such integrals is that of Harnack, which is applicable to both absolutely and non-absolutely convergent integrals. It has been regarded as doubtful by various writers whether the existence of such a non-absolutely convergent integral in the interval (a, b) necessarily entails the existence of the integral of the same function in a sub-interval (a', b') contained in (a, b). For example, it was denied by Stolz that this is the case.† All doubt upon the matter was however removed by E. H. Moore,‡ who proved that, if $\int_a^b \phi(x)dx$ exists in accordance with Harnack's definition, then also $\int_{a'}^{b'} \phi(x)dx$ also exists, where

$$a \leqslant a' < b' \leqslant b.$$

* For references, see my work *Theory of Functions of a Real Variable*, pp. 359, 360.

† See *Grundzüge*, Vol. III. p. 277.

‡ *Trans. Amer. Math. Soc.*, Vol. II., p. 296 and p. 459.

He also proved that the second integral is uniformly convergent for all values of a', b'; and that the relation

$$\int_a^x \phi(x)\,dx + \int_x^b \phi(x)\,dx = \int_a^b \phi(x)\,dx$$

is valid. I have, in a former paper, introduced an extension of Harnack's definition, in which the improper integral is defined as the limit of a sequence of Lebesgue integrals, instead of that of a sequence of Riemann integrals. I have elsewhere* pointed out that E. H. Moore's results are applicable when this extension is taken instead of Harnack's original definition; and I have shewn that, in accordance with this extended definition, $\int_a^x \phi(x)$ is a continuous function of x.

In the second part of the present paper it is shewn that the existence of $\int_a^b \phi(x)\,dx$ as a non-absolutely convergent integral, in accordance with either Harnack's definition or its extension, entails as a necessary consequence the existence of $\int_a^b f(x)\,\phi(x)\,dx$, where $f(x)$ is limited and monotone in (a, b); or more generally when $f(x)$ is of limited total fluctuation (*à variation bornée*). This general result I believe to be new.† Lastly, it is shewn that the second mean-value theorem holds for the case of such a function $\phi(x)$ as possesses only a non-absolutely convergent improper integral in the interval (a, b).

1. Let $\phi(x)$ be a function which, whether it be limited or unlimited in the interval (a, b), possesses a Lebesgue integral in that interval. Let $f(x)$ be limited and monotone in (a, b), and let it never increase as x increases from a to b; and suppose it to have no negative values in the interval.

Let ϵ_r be an arbitrarily chosen positive number $< f(a+0)-f(b-0)$, and let the function $f_r(x)$ be defined for the interval (a, b) as follows:—

An interval (a, x_1) can be determined such that $f(a+0)-f(x) < \epsilon_r$, for $a \leqslant x < x_1$, and such that $f(a+0)-f(x_1) \geqslant \epsilon_r$. In case x_1 is a point of continuity of $f(x)$, we shall have $f(a+0)-f(x_1) = \epsilon_r$; but, if x_1 is point of discontinuity, we may have $f(a+0)-f(x_1) > \epsilon_r$. Next determine an interval (x_1, x_2) such that $f(x_1+0)-f(x) < \epsilon_r$, for $x_1 \leqslant x < x_2$, and that $f(x_1+0)-f(x_2) \geqslant \epsilon_r$. Proceed in this manner to determine intervals

* See "Functions of a Real Variable," p. 558.

† The special case in which the set of points of infinite discontinuity is finite is given by Dini; see *Grundlagen*, p. 424. He employs the older definition of Cauchy.

(x_2, x_3), (x_3, x_4), ... ; then for some finite value of n not exceeding $\frac{f(a+0)-f(b-0)}{\epsilon_r}$, the point x_n must coincide with b.

Let $f_r(x) = f(a+0)$ for $a \leqslant x < x_1$; let $f_r(x) = f(x_1+0)$ for $x_1 \leqslant x < x_2$; and, in general $f_r(x) = f(x_s+0)$ for $x_s \leqslant x < x_{s+1}$. The function $f_r(x)$ has only a finite number of values in the interval (a, b) ; it is monotone, never increases as x increases, and is never negative. Moreover, we have $0 \leqslant f_r(x)-f(x) < \epsilon_r$ for every value of x except for the values $a, x_1, x_2, \ldots, x_{n-1}, b$.

We have now

$$\int_a^b f_r(x)\,\phi(x)\,dx$$
$$= f(a+0)\int_a^{x_1}\phi(x)\,dx + f(x_1+0)\int_{x_1}^{x_2}\phi(x)\,dx + \ldots + f(x_{n-1}+0)\int_{x_{n-1}}^{b}\phi(x)\,dx.$$

Denote $\int_a^x \phi(x)\,dx$ by $F(x)$, then

$$\int_a^b f_r(x)\,\phi(x)\,dx$$
$$= f(a+0)F(x_1) + f(x_1+0)\{F(x_2)-F(x_1)\} + \ldots + f(x_{n-1}+0)\{F(b)-F(x_{n-1})\}$$
$$= \{f(a+0)-f(x_1+0)\}F(x_1) + \{f(x_1+0)-f(x_2+0)\}F(x_2) + \ldots$$
$$+ \{f(x_{n-2}+0)-f(x_{n-1}+0)\}F(x_{n-1}) + f(x_{n-1}+0)F(b).$$

Since $f(a+0)-f(x_1+0),\ f(x_1+0)-f(x_2+0),\ \ldots,\ f(x_{n-1}+0)$

are all positive, the expression on the right hand will be unaltered if $F(x_1), F(x_2), \ldots, F(b)$ be all replaced by some number N which lies between the greatest and the least of these n numbers. The expression then becomes $Nf(a+0)$. Moreover, it is known that $F(x)$ is continuous in the interval (a, b), and it therefore follows that some value ξ_r of x exists such that $N = F(\xi_r)$. It has, therefore, been proved that

$$\int_a^b f_r(x)\,\phi(x)\,dx = f(a+0)\int_a^{\xi_r}\phi(x)\,dx,$$

where ξ_r is some point in the interval (a, b).

Also $$\left|\int_a^b f_r(x)\,\phi(x)\,dx - \int_a^b f(x)\,\phi(x)\,dx\right| < \epsilon_r\int_a^b|\,\phi(x)\,|\,dx\ ;$$

the integral on the right-hand side being existent, because every Lebesgue integral is absolutely convergent. It follows that

$$\left|\int_a^b f(x)\,\phi(x)\,dx - f(a+0)\int_a^{\xi_r}\phi(x)\,dx\right| < \eta_r,$$

where $$\eta_r = \epsilon_r\int_a^b|\,\phi(x)\,|\,dx.$$

Let $r = 1, 2, 3, \ldots$, where $\epsilon_1, \epsilon_2, \epsilon_3, \ldots, \epsilon_r, \ldots$ is a sequence which converges to zero; also $\eta_1, \eta_2, \eta_3, \ldots, \eta_r, \ldots$ is a sequence which converges to zero. The points $\xi_1, \xi_2, \ldots, \xi_r, \ldots$ form a sequence which has at least one limiting point, and it is clear that the sequence $\{\epsilon_r\}$ may be so chosen by neglecting, if necessary, a part, that the sequence $\{\xi_r\}$ has a single limiting point $\bar{\xi}$.

We have then

$$\left| \int_a^b f(x)\,\phi(x)\,dx - f(a+0) \int_a^{\bar{\xi}} \phi(x)\,dx \right| < \eta_r + f(a+0) \left| \int_{\xi_r}^{\bar{\xi}} \phi(x)\,dx \right|.$$

If ζ be an arbitrarily chosen positive number, as small as we please, a value r_1 of r may be so chosen that $\eta_r < \frac{1}{2}\zeta$, and such that

$$f(a+0) \left| \int_{\xi_r}^{\bar{\xi}} \phi(x)\,dx \right| < \tfrac{1}{2}\zeta,$$

provided $r \geqslant r_1$. Then we have

$$\left| \int_a^b f(x)\,\phi(x)\,dx - f(a+0) \int_a^{\bar{\xi}} \phi(x)\,dx \right| < \zeta;$$

and therefore, since ζ is arbitrarily small, we must have

$$\int_a^b f(x)\,\phi(x)\,dx = f(a+0) \int_a^{\bar{\xi}} \phi(x)\,dx. \tag{1}$$

In a precisely similar manner, when $f(x)$ never diminishes as x increases from a to b, and is never negative, it may be shewn that

$$\int_a^b f(x)\,\phi(x)\,dx = f(b-0) \int_{\bar{\eta}}^b \phi(x)\,dx, \tag{2}$$

where $\bar{\eta}$ is some point in the interval (a, b).

In case

$$f(a) = f(a+0), \qquad f(b) = f(b-0),$$

these results are equivalent to Bonnet's form of the second mean-value theorem.

Next let $f(x)$ be only restricted to be limited and monotone in (a, b), but unrestricted as regards sign. In case $f(x)$ diminishes as x increases, we may apply the theorem (1) to the function $f(x) - f(b-0)$, and we thus have

$$\int_a^b f(x)\,\phi(x)\,dx = f(a+0) \int_a^{\bar{\xi}} \phi(x)\,dx + f(b-0) \int_{\bar{\xi}}^b \phi(x)\,dx.$$

In case $f(x)$ increases as x increases, we may apply the theorem (2) to the function $f(x)-f(a+0)$, and we thus have

$$\int_a^b f(x)\,\phi(x)\,dx = f(a+0)\int_a^{\bar{\eta}} \phi(x)\,dx + f(b-0)\int_{\bar{\eta}}^b \phi(x)\,dx.$$

The following theorem has now been established :—

If $f(x)$ be limited and monotone in the interval (a, b), and if $\phi(x)$ be any function, limited or unlimited, which has a Lebesgue integral in the interval (a, b), then

$$\int_a^b f(x)\,\phi(x)\,dx = f(a+0)\int_a^X \phi(x)\,dx + f(b-0)\int_X^b \phi(x)\,dx,$$

where X is some point in the interval (a, b).

In order to obtain the more general form of this theorem, let A and B be numbers such that $A \geqslant f(a+0)$, $B \leqslant f(b-0$, when $f(x)$ diminishes as x increases from a to b ; or else, let $A \leqslant f(a+0)$, $B \geqslant f(b-0)$, when $f(x)$ increases as x increases from a to b.

Consider an interval $(a-\lambda, b+\lambda)$ which contains (a, b) in its interior, and let $f(x) = A$, for $a-\lambda \leqslant x < a$, and $f(x) = B$, for $b < x \leqslant b+\lambda$, the function $f(x)$ being already defined for $a \leqslant x \leqslant b$. Let $\phi(x) = 0$, for $a-\lambda \leqslant x < a$ and for $b < x \leqslant b+\lambda$, where $\phi(x)$ has already been defined for $a \leqslant x \leqslant b$. Now apply the theorem established above to the interval $(a-\lambda, b+\lambda)$, for which $f(a-\lambda+0) = A$, $f(b+\lambda-0) = B$. We then have

$$\int_a^b f(x)\,\phi(x)\,dx = A\int_a^X \phi(x)\,dx + B\int_X^b \phi(x)\,dx,$$

where X is some point in the interval $(a-\lambda, b+\lambda)$, and which clearly lies in (a, b).

This general theorem may now be stated as follows :—

If $f(x)$ be a function which is limited and monotone in the interval (a, b), and if $\phi(x)$ be any function, limited or unlimited, which has a Lebesgue integral in (a, b) ; then, if A, B be numbers such that

$$A \geqslant f(a+0), \qquad B \leqslant f(b-0),$$

or

$$A \leqslant f(a+0), \qquad B \geqslant f(b-0),$$

according as $f(x)$ diminishes or increases from a to b,

$$\int_a^b f(x)\,\phi(x)\,dx = A\int_a^X \phi(x)\,dx + B\int_X^b \phi(x)\,dx,$$

where X is some number in the interval (a, b). The number X will

depend on the values of A and B. In particular we may have $A = f(a)$, $B = f(b)$, or also $A = f(a+0)$, $B = f(b-0)$.

In case the function $f(x)$ is never negative in the interval (a, b), we may take $B = 0$ if $f(x)$ is a diminishing function; and we may take $A = 0$ if $f(x)$ is an increasing function. We obtain thus the following generalization of Bonnet's theorem:—

If $f(x)$ be a limited monotone function which is never negative in the interval (a, b), and if $\phi(x)$ be any limited, or unlimited, function which has a Lebesgue integral in (a, b), then

$$\int_a^b f(x)\,\phi(x)\,dx = A\int_a^X \phi(x)\,dx,$$

where A is any number such that $A \geqslant f(a+0)$, and X is a number in the interval (a, b), dependent on A, provided $f(x)$ diminishes as x increases from a to b. Also, when $f(x)$ increases as x increases from a to b, we have

$$\int_a^b f(x)\,\phi(x)\,dx = B\int_X^b \phi(x)\,dx,$$

where B is any number $\geqslant f(b-0)$, and X is some number in the interval (a, b) dependent on the value of B. In particular, we may take $A = f(a)$, $B = f(b)$, in the two cases.

2. The mean-value theorem has been proved above for the case in which the function $\phi(x)$ is restricted only by the assumption that it possesses a Lebesgue integral in the interval (a, b). In particular, $\phi(x)$ may have a Riemann integral, or may have an absolutely convergent improper integral in accordance with the definition of Harnack. There remains for consideration only the case in which $\phi(x)$ has a non-absolutely convergent improper integral in the interval (a, b). Harnack's extension of Riemann's definition is applicable to define such improper integrals, but a wider definition is obtained by extending Harnack's definition, so that the improper integral is taken to be the limit of a sequence of Lebesgue integrals instead of that of a sequence of Riemann integrals.*

This extension of Harnack's definition, which applies both to absolutely

* I have given the extension of Harnack's definition in *The Theory of Functions of a Real Variable*, p. 557.

and to non-absolutely convergent improper integrals may be stated as follows:—

Let $\phi(x)$ be a function which has a non-dense closed set G of points of infinite discontinuity; the content of the set G being zero. Also let $\phi(x)$ be such that, in any interval whatever contained in (a, b) which contains, in its interior and at its extremities, no point of the set G, it has an integral in accordance with the definition of Lebesgue, or in particular in accordance with that of Riemann. Let the points of G be enclosed in the interiors of intervals of a finite set $\delta_1, \delta_2, \ldots, \delta_n$, so that each interval of the set contains at least one point of G. Let the remaining part of (a, b) consist of the intervals $\eta_1, \eta_2, \ldots, \eta_{\bar{n}}$ which are free in their interiors and at their ends from points of G. Let $S_{\bar{n}}$ denote the integral of $\phi(x)$ taken through the set of intervals $\{\eta\}$. Let a sequence of such sets of intervals $\{\delta\}$ be taken such that $\sum_1^n \delta$ converges to zero as n is indefinitely increased; $\bar{n}$ having the values in a sequence of numbers which increase indefinitely. If the numbers $S_{\bar{n}}$ converge, as $\bar{n}$ is indefinitely increased, to a definite number S, independent of the particular sequence of sets of intervals $\{\delta\}$ chosen, subject only to the condition

$$\lim_{n=\infty} \sum_1^n \delta = 0,$$

then the number S is defined to be the improper integral $\int_a^b \phi(x)\,dx$.

Whenever an improper integral, so defined, is absolutely convergent, the definition is in accordance with that of Lebesgue.* We need therefore consider only the case in which the integral is non-absolutely convergent. It is known† that, if $\int_a^b \phi(x)dx$ exist as a non-absolutely convergent integral, $\int_a^x \phi(x)$ also exists, and is a continuous function of x. Moreover, it is known‡ that the convergence of $\int_a^x \phi(x)\,dx$ is uniform for all values of x in the interval (a, b).

It will now be shewn that, if $\int_a^b \phi(x)\,dx$ exists in accordance with the above definition, or in particular in accordance with that of Harnack,

* See *Theory of Functions of a Real Variable*, p. 397.
† *Ibid.*, p. 558.
‡ *Ibid.*, p. 383.

then $\int_a^b f(x)\,\phi(x)\,dx$ also exists; where $f(x)$ denotes as before a function which is monotone and limited in (a, b).

Let $\phi_\delta(x)$ denote a function which is equal to zero at all interior points of the intervals of a finite set $\{\delta\}$ which enclose the points of G, and which is equal to $\phi(x)$ at all points of (a, b) not in the interior of the intervals δ. Let $\phi_{\delta'}(x)$ denote the corresponding function for another such set of intervals $\{\delta'\}$. The condition of uniform convergence of $\int_a^c \phi(x)\,dx$ is expressed by the statement that, corresponding to any arbitrarily chosen positive number ϵ, a number ξ can be determined such that for any two sets of intervals $\{\delta\}$, $\{\delta'\}$ whatever, of the kind specified in the definition, and such that $\Sigma\delta < \xi$, $\Sigma\delta' < \xi$, the condition

$$\left| \int_a^x \phi_\delta(x)\,dx - \int_a^x \phi_{\delta'}(x)\,dx \right| < \epsilon$$

is satisfied, for all values of x in (a, b).

Let $F(x)$ denote the limited function defined by

$$F(x) \equiv \phi_\delta(x) - \phi_{\delta'}(x);$$

we may then apply the second mean-value theorem to the function $F(x)$. Thus

$$\int_a^b f(x)\,F(x)\,dx = f(a)\int_a^\xi F(x)\,dx + f(b)\int_\xi^b F(x)\,dx,$$

where ξ is some point in the interval (a, b).

We have therefore

$$\left| \int_a^b f(x)\,\phi_\delta(x)\,dx - \int_a^b f(x)\,\phi_{\delta'}(x)\,dx \right| < \epsilon\,\{|f(a)| + |f(b)|\}.$$

Denoting the expression on the right-hand side by ϵ', we see that, corresponding to the arbitrariiy chosen positive number ϵ', the number ξ can be so chosen that for any two sets of intervals $\{\delta\}$, $\{\delta'\}$, such that $\Sigma\delta < \xi$, $\Sigma\delta' < \xi$, the condition

$$\left| \int_a^b f(x)\,\phi_\delta(x)\,dx - \int_a^b f(x)\,\phi_{\delta'}(x)\,dx \right| < \epsilon'$$

is satisfied. This is, however, the necessary and sufficient condition for the existence of $\int_a^b f(x)\,\phi(x)\,dx$, in accordance with the above definition.

The following theorem has now been established :—

If $\phi(x)$ have an improper integral in (a, b), either absolutely or non-absolutely convergent, in accordance with the above definition, or in

particular, in accordance with the definition of Harnack, and if $f(x)$ be any limited and monotone function defined for the same interval, then $f(x)\,\phi(x)$ also has an improper integral in (a, b) in accordance with the same definition.

Since any function of limited total fluctuation is expressible as the difference of two monotone functions $f_1(x)$, $f_2(x)$, and since the two functions $f_1(x)\,\phi(x)$, $f_2(x)\,\phi(x)$ have the same set G of points of infinite discontinuity as $\phi(x)$ has, we obtain the following general theorem :—

If $\phi(x)$ have an improper integral in (a, b), either absolutely or non-absolutely convergent, and if $f(x)$ be any function with limited total fluctuation (à variation bornée) in (a, b), then $\int_a^b f(x)\,\phi(x)\,dx$ exists as an improper integral.

This theorem is, of course, well known for the case in which $\int_a^b \phi(x)\,dx$ is absolutely convergent, but is, in its generality, so far as I know, new for the case in which the integral of $\phi(x)$ is non-absolutely convergent.

It will be found useful in deciding as to the existence of non-absolutely convergent integrals of special functions. For example, if the Fourier coefficient $\frac{1}{2\pi}\int_{-\pi}^{\pi} \phi(x)\,dx$, corresponding to $\phi(x)$, exists as a non-absolutely convergent improper integral, then all the other coefficients $\frac{1}{\pi}\int_{-\pi}^{\pi} \phi(x)\cos nx\,dx$, $\frac{1}{\pi}\int_{-\pi}^{\pi} \phi(x)\sin nx\,dx$ necessarily exist.

3. It will now be shewn that the second mean-value theorem holds for any function $\phi(x)$ which has a non-absolutely convergent improper integral in (a, b).

Applying the mean-value theorem to the limited function $\phi_\delta(x)$, we have

$$\int_a^b f(x)\,\phi_\delta(x)\,dx = A\int_a^{X_\delta} \phi_\delta(x)\,dx + B\int_{X_\delta}^b \phi_\delta(x)\,dx,$$

where A and B are subject to the same conditions as in § 1. Now

$$\int_a^{X_\delta} \phi_\delta(x)\,dx - \int_a^{X_\delta} \phi(x)\,dx, \qquad \int_{X_\delta}^b \phi_\delta(x)\,dx - \int_{X_\delta}^b \phi(x)\,dx,$$

are both numerically less than an arbitrarily chosen number ϵ, provided $\Sigma\delta$ is sufficiently small. This follows from the uniform convergence of $\int_a^x \phi(x)\,dx$.

Also $\int_a^b f(x)\,\phi_\delta(x)\,dx$ differs from $\int_a^b f(x)\,\phi(x)\,dx$ by less than ϵ, if $\Sigma\delta$ is sufficiently small. Hence we have

$$\int_a^b f(x)\,\phi(x)\,dx = A\int_a^{X_\delta}\phi(x)\,dx + B\int_{X_\delta}^b \phi(x)\,dx + \eta,$$

where $|\eta|$ is arbitrarily small. By similar reasoning to that employed at the end of § 1, it follows from the continuity of $\int_a^{X_\delta}\phi(x)dx$, $\int_{X_\delta}^b \phi(x)\,dx$ with respect to x, that a number ξ in (a, b) exists, such that

$$\int_a^b f(x)\,\phi(x)dx = A\int_a^{\xi}\phi(x)dx + B\int_{\xi}^b \phi(x)dx.$$

Bonnet's form of the theorem may be deduced as in § 1. The complete generality of the second mean-value theorem has accordingly been established.

ON THE REPRESENTATION OF A FUNCTION BY A SERIES OF LEGENDRE'S FUNCTIONS

By E. W. HOBSON.

[Received October 4th, 1908.—Read November 12th, 1908.]

IN my paper* "On a General Convergence Theorem and the Theory of the Representation of a Function by Series of Normal Functions" I considered the convergence of the series of Legendre's functions which represents a function $f(x)$ defined for the interval $(-1, 1)$ of the real variable x. It was there shewn that, if $f(x)$ have a Lebesgue integral in the interval $(-1, 1)$, then the series converges to the value

$$\tfrac{1}{2}\{f(x+0)+f(x-0)\}$$

at any interior point x of the interval $(-1, 1)$, for which a neighbourhood exists in which $f(x)$ is of limited total fluctuation (*à variation bornée*) provided the sufficient condition be satisfied, that there exist neighbourhoods of the end-points -1, 1, in which $f(x)$ is of limited total fluctuation. The chief object of the present communication is to shew that this last condition may be replaced by the less stringent one, that it is sufficient that $\frac{f(x)}{(1-x^2)^{\frac{1}{4}}}$ have a Lebesgue integral in the interval $(-1, 1)$. This is equivalent to the condition that both $\frac{f(x)}{(1-x)^{\frac{1}{4}}}$ and $\frac{f(x)}{(1+x)^{\frac{1}{4}}}$ should have Lebesgue integrals in $(-1, 1)$. The condition is satisfied, in particular if $|f(x)|$ have finite upper limits in neighbourhoods of the points -1, 1; and more generally when those points are points of infinite discontinuity of $f(x)$, of types limited by the necessity for the convergence of the integrals of $\frac{f(x)}{(1-x^2)^{\frac{1}{4}}}$. The difficulty in connection with the end-points of the interval arises from the fact that the asymptotic expressions for the Legendre's functions are applicable only for values of x in an interval $(-1+\epsilon, 1-\epsilon)$, and not for all values of x in the interval $(-1, 1)$. This difficulty is here surmounted by the establish-

* *Proc.*, Ser. 2, Vol. 6, p. 349.

ment of the theorem that $n^{\frac{1}{2}}(1-x^2)^{\frac{1}{4}} P_n(x)$ is numerically less than a fixed positive number, independent of n and x, for all (integral) values of n, and for all values of x in the interval $(-1, 1)$.

In the latter part of this paper, the question of the convergence of the series at the end-points of the interval $(-1, 1)$ is treated in some detail. It is shewn that, for such convergence, much more stringent conditions as regards the nature of the function $f(x)$ are requisite than for the convergence of the series at an interior point of the interval. This investigation may prove of interest as exhibiting the effect of the singularities of a differential equation, in this case Legendre's equation, upon the series of normal functions.

1. It is known that, in any interval $(\eta, \pi-\eta)$, where η is an arbitrarily small positive number, $P_n(\cos\theta)$ is represented by

$$\left(\frac{2}{n\pi\sin\theta}\right)^{\frac{1}{2}}\left[\cos\left\{(n+\tfrac{1}{2})\theta-\frac{\pi}{4}\right\}+\frac{\alpha(n,\theta)}{n}\right],$$

where $\alpha(n, \theta)$ is, for all values of n and θ, numerically less than some fixed positive number. It is, however, necessary for the purpose of estimating the limiting value of an integral taken through the neighbourhood of either of the points $\theta = 0$, $\theta = \pi$, when the integral involves $P_n(\cos\theta)$, to have information as to the mode in which $P_n(\cos\theta)$ varies with n and θ for all integral values of n and for all values of θ in the interval $(0, \pi)$. It will will here be proved that $(n\sin\theta)^{\frac{1}{2}} P_n(\cos\theta)$ is numerically less than some fixed positive number for all values of θ in the interval $(0, \pi)$, and for all positive integral values of n.

It is known that $\frac{1}{4}\pi P_n(\cos\theta)$ is given for every value of θ such that $0 < \theta < \pi$ by the convergent series

$$\frac{2.4\ldots 2n}{3.5\ldots 2n+1}\left[\sin(n+1)\theta+\frac{1.n+1}{1.2n+3}\sin(n+3)\theta\right.$$
$$\left.+\frac{1.3}{1.2}\frac{(n+1)(n+2)}{(2n+3)(2n+5)}\sin(n+5)\theta+\ldots\right],$$

which may be written in the form

$$\Pi(\tfrac{1}{2})\left[\frac{\Pi(n)}{\Pi(n+\frac{1}{2})}\sin(n+1)\theta+\tfrac{1}{2}\frac{\Pi(n+1)}{\Pi(n+\frac{3}{2})}\sin(n+3)\theta+\ldots\right.$$
$$\left.+\frac{1.3\ldots 2r-1}{2.4\ldots 2r}\frac{\Pi(n+r)}{\Pi(n+r+\frac{1}{2})}\sin(n+2r+1)\theta+\ldots\right]$$

Since $$\Pi(x) = e^{-x}x^x(2\pi x)^{\frac{1}{2}}\left(1+\frac{A}{\sqrt{x}}\right),$$

where $|A|$ is limited for all positive values of x, we have

$$\frac{\Pi(n+r)}{\Pi(n+r+\frac{1}{2})} = e^{\frac{1}{2}} \frac{(n+r)^{\frac{1}{2}}}{n+r+\frac{1}{2}} \left[1+\frac{1}{2(n+r)}\right]^{-(n+r)} \left(1+\frac{A}{\sqrt{n+r}}\right) \left(1+\frac{A'}{\sqrt{n+r+\frac{1}{2}}}\right)^{-1},$$

where $|A|$, $|A'|$ are limited for all values of n and r.

We have

$$\frac{A'}{\sqrt{n+r+\frac{1}{2}}} = \frac{A''}{\sqrt{n+r}},$$

where $|A''|$ is limited, and $\left(1+\frac{A''}{\sqrt{n+r}}\right)^{-1}$ lies between $1-\frac{A''}{\sqrt{n+r}}$ and 1, for all sufficiently large values of $n+r$; therefore

$$\left(1+\frac{A'}{\sqrt{n+r+\frac{1}{2}}}\right)^{-1} = 1+\frac{A'''}{\sqrt{n+r}},$$

where $|A'''|$ is limited for all values of n and r. Again, we have

$$\left(1+\frac{A}{\sqrt{n+r}}\right)\left(1+\frac{A'''}{\sqrt{n+r}}\right) = 1+\frac{1}{\sqrt{n+r}}\left(A+A'''+\frac{AA'''}{n+r}\right) = 1+\frac{B}{\sqrt{n+r}},$$

where $|B|$ is limited for all values of n and r.

The expression

$$\frac{e^{\frac{1}{2}}}{\sqrt{n+r}}\left[1+\frac{1}{2(n+r)}\right]^{-(n+r+1)}\left(1+\frac{B}{\sqrt{n+r}}\right)$$

is equivalent to

$$\frac{e^{\frac{1}{2}}}{\sqrt{n+r}}\left[1+\frac{1}{2(n+r)}\right]e^{-x\log(1+1/2x)}\left(1+\frac{B}{\sqrt{n+r}}\right),$$

where $x=n+r$. Also $e^{-x\log(1+1/2x)} = e^{-x(1\ 2x-\theta/8x^2)}$,

where $0<\theta<1$, and this is equivalent to $e^{\frac{1}{2}}\left(1+\frac{a}{x}\right)$, where a is limited for all positive values of x greater than 1. It now follows that

$$\frac{\Pi(n+r)}{\Pi(n+r+\frac{1}{2})} = \frac{1}{\sqrt{n+r}}\left\{1+\frac{1}{2(n+r)}\right\}\left(1+\frac{a}{n+r}\right)\left(1+\frac{B}{\sqrt{n+r}}\right)$$

$$= \frac{1}{\sqrt{n+r}}\left(1+\frac{\gamma}{\sqrt{n+r}}\right),$$

when $|\gamma|$ is less than some fixed positive number, for all values of n and r (>0).

We have now obtained for $P_n(\cos\theta)$ the expression

$$\frac{2}{\sqrt{\pi}}\left[\left(\frac{1}{n^{\frac{1}{2}}}+\frac{\gamma}{n^{\frac{3}{2}}}\right)\sin(n+1)\theta + \sum_{r=1}^{\infty}\frac{1.3\ldots 2r-1}{2.4\ldots 2r}\left\{\frac{1}{(n+r)^{\frac{1}{2}}}+\frac{\gamma}{(n+r)^{\frac{3}{2}}}\right\}\sin(n+2r+1)\theta\right],$$

where γ depends on n and r, but is numerically less than some fixed number independent of n, r, and θ. This holds for every value of θ except for $\theta=0$ and $\theta=\pi$.

To sum the series

$$\frac{1}{n^{\frac{1}{2}}}\sin(n+1)\theta+\sum_{r=1}^{\infty}\frac{1.3\ldots 2r-1}{2.4\ldots 2r}\frac{1}{(n+r)^{\frac{1}{2}}}\sin(n+2r+1)\theta,$$

we observe that, if $|h|<1$,

$$e^{(n+1)\iota\theta}(1-he^{2\iota\theta})^{-\frac{1}{2}}=e^{(n+1)\iota\theta}+\sum_{r=1}^{\infty}\frac{1.3\ldots 2r-1}{2.4\ldots 2r}h^r e^{(n+2r+1)\iota\theta},$$

with a similar equality in case the sign of ι is changed. Writing $h=e^{-u^2}$, we deduce that

$$\frac{1}{2\iota}e^{-nu^2}\left\{e^{(n+1)\iota\theta}(1-e^{-u^2}e^{2\iota\theta})^{-\frac{1}{2}}-e^{-(n+1)\iota\theta}(1-e^{-u^2}e^{-2\iota\theta})^{-\frac{1}{2}}\right\}$$
$$=e^{-nu^2}\sin(n+1)\theta+\sum_{r=1}^{\infty}\frac{1.3.5\ldots 2r-1}{2.4.6\ldots 2r}e^{-(n+r)u^2}\sin(n+2r+1)\theta,$$

where $u>0$.

We now employ the known theorem* that, if Σa_r be any convergent series, and if $u_1(x)$, $u_2(x)$, ..., $u_r(x)$, ... be defined for the interval (α, β) of x, and be limited and positive in that interval, and such that $u_r(x)\geqslant u_{r+1}(x)$ for every value of r and x, then $\Sigma a_n u_n(x)$ converges uniformly in the interval (α, β). Since $e^{-ru^2}\geqslant e^{-(r+1)u^2}$ for all values of u in any interval $(0, \lambda)$, we see that the above series converges uniformly for all values of u in such interval. It follows that the above series may be integrated term by term, between the limits 0 and λ of u, and that the series so obtained converges to the integral of the sum of the above series. In order to shew that we may integrate term by term with respect to u from 0 to ∞, it is sufficient† to shew that the additional condition is satisfied that λ and r_1 can be so chosen, corresponding to an arbitrarily chosen positive number ϵ, that

$$\int_{\lambda}^{\lambda'}\left[e^{-nu^2}\sin(n+1)\theta+\sum_{s=1}^{s=r}\frac{1.3.5\ldots 2s-1}{2.4.6\ldots 2s}e^{-(n+s)u^2}\sin(n+2s+1)\theta\right]du$$

---

* See *Functions of a Real Variable*, p. 479.

† *Ibid.*, p. 546.

is numerically less than ϵ, for every value of $\lambda' > \lambda$, and for every value of $r \geqslant r_1$. This expression is clearly less numerically than

$$\int_\lambda^{\lambda'} \left[e^{-nu^2} + \sum_{s=1}^{s=r} e^{-(n+s)u^2} \right] du$$

or than $\int_\lambda^{\lambda'} \frac{e^{-nu^2}}{1-e^{-u^2}}\, du$, and this is less than $\frac{1}{1-e^{-1}} \int_\lambda^\infty e^{-nu^2} du$, if $\lambda > 1$. Hence, since $\int_\lambda^\infty e^{-nu^2} du$ is convergent, it is clear that λ can be so chosen that, for every value of r, the above expression is numerically less than ϵ. Remembering that

$$\int_0^\infty e^{-(n+r)u^2} du = \frac{\sqrt{\pi}}{2\sqrt{(n+r)}},$$

we now find that

$$\frac{\sqrt{\pi}}{2} \left\{ \frac{1}{n^{\frac{1}{2}}} \sin(n+1)\theta + \sum_{r=1}^{\infty} \frac{1.3 \ldots 2r-1}{2.4 \ldots 2r} \frac{1}{(n+r)^{\frac{1}{2}}} \sin(n+2r+1)\theta \right\}$$

$$= \frac{1}{2\iota} \int_0^\infty e^{-nu^2} \left\{ e^{(n+1)\iota\theta} (1-e^{-u^2} e^{2\iota\theta})^{-\frac{1}{2}} - e^{-(n+1)\iota\theta} (1-e^{-u^2} e^{-2\iota\theta})^{-\frac{1}{2}} \right\} du$$

$$= \frac{1}{2\iota n^{\frac{1}{2}}} \int_0^\infty e^{-v^2} \left[e^{(n+1)\iota\theta} (1-e^{-v^2/n} e^{2\iota\theta})^{-\frac{1}{2}} - e^{-(n+1)\iota\theta} (1-e^{-v^2/n} e^{-2\iota\theta})^{-\frac{1}{2}} \right] dv.$$

Writing $1-e^{-v^2/n} \cos 2\theta = R \cos\phi$, $e^{-v^2/n} \sin 2\theta = R \sin\phi$, the expression on the right-hand side becomes $\frac{1}{n^{\frac{1}{2}}} \int_0^\infty \frac{e^{-v^2}}{R^{\frac{1}{2}}} \sin\left\{(n+1)\theta + \frac{1}{2}\phi\right\} dv$.

It is now seen that

$$\frac{2}{\sqrt{\pi}} \left[\frac{1}{n^{\frac{1}{2}}} \sin(n+1)\theta + \sum_{r=1}^{\infty} \frac{1.3 \ldots 2r-1}{2.4 \ldots 2r} \frac{1}{(n+r)^{\frac{1}{2}}} \sin(n+2r+1)\theta \right]$$

is numerically less than $\frac{4}{\pi} \frac{1}{n^{\frac{1}{2}}} \int_0^\infty \frac{1}{R^{\frac{1}{2}}} e^{-v^2} dv$.

Also $$\frac{\sin^2\theta}{R^2} = \frac{\sin^2\theta}{(1-e^{-v^2/n})^2 + 4e^{-v^2/n} \sin^2\theta} \leqslant \frac{1}{4e^{-v^2/n}};$$

hence, choosing a number δ between 0 and 1, we see that $\frac{\sin^2\theta}{R^2} \leqslant \frac{1}{4\delta}$, if $e^{-v^2/n}$ is between 1 and δ. If $e^{-v^2/n}$ lies between δ and 0, we see that

$$\frac{\sin^2\theta}{R^2} < \frac{\sin^2\theta}{(1-e^{-v^2/n})^2} < \frac{\sin^2\theta}{(1-\delta)^2}, \quad \text{or} \quad \frac{\sin^2\theta}{R^2} < \frac{1}{(1-\delta)^2}.$$

It thus appears that $\frac{\sin^2\theta}{R^2}$ is less than some fixed positive number K', for every value of θ and r. Therefore

$$\sqrt{n\sin\theta}\,\frac{2}{\sqrt{\pi}}\left[\frac{1}{n^{\frac{1}{2}}}\sin(n+1)\theta+\sum_{r=1}^{\infty}\frac{1.3\ldots 2r-1}{2.4\ldots 2r}\,\frac{1}{(n+r)^{\frac{1}{2}}}\sin(n+2r+1)\theta\right]$$

is numerically less than a fixed positive number independent of n and θ; for

$$\int_0^{\infty}\left(\frac{\sin\theta}{R}\right)^{\frac{1}{2}}e^{-v^2}dv<K^{\frac{1}{4}}\int_0^{\infty}e^{-v^2}dv<\frac{\sqrt{\pi}}{2}K^{\frac{1}{4}}.$$

We have next to consider the expression

$$\frac{2}{\sqrt{\pi}}\left[\frac{\gamma}{n^{\frac{3}{2}}}\sin(n+1)\theta+\sum_{r=1}^{\infty}\frac{1.3\ldots 2r-1}{2.4\ldots 2r}\,\frac{\gamma}{(n+r)^{\frac{3}{2}}}\sin(n+2r+1)\theta\right],$$

where the numbers γ are less than some fixed number A independent of n, r, and θ. This expression is numerically less than

$$\frac{2A}{\sqrt{\pi}}\left[\frac{1}{n^{\frac{3}{2}}}+\sum_{r=1}^{\infty}\frac{1.3\ldots 2r-1}{2.4\ldots 2r}\,\frac{1}{(n+r)^{\frac{3}{2}}}\right]$$

or than

$$\frac{2A}{\sqrt{\pi}}\left[\frac{1}{n^{\frac{3}{2}}}+\int_0^1\frac{1}{(n+x)^{\frac{3}{2}}}dx+\int_1^2\frac{1}{(n+x)^{\frac{3}{2}}}dx+\ldots\right],$$

which is

$$\frac{2A}{\sqrt{\pi}}\left(\frac{1}{n^{\frac{3}{2}}}+\int_0^{\infty}\frac{1}{(n+x)^{\frac{3}{2}}}dx\right)\quad\text{or}\quad\frac{2A}{\sqrt{\pi}}\left(\frac{1}{n^{\frac{3}{2}}}+\frac{1}{2n^{\frac{1}{2}}}\right).$$

If the expression be multiplied by $(n\sin\theta)^{\frac{1}{2}}$, we see that it is then numerically less than $\frac{2A}{\sqrt{\pi}}\left(\frac{1}{2}+\frac{1}{n}\right)$, or than $\frac{3A}{\sqrt{\pi}}$, if $n\geqslant 1$.

It has now been proved that $(n\sin\theta)^{\frac{1}{2}}P_n(\cos\theta)$ *is numerically less than some fixed positive number, independent of* n *and* θ. This has been proved, on the assumption that $0<\theta<\pi$; but as the expression vanishes when $\theta=0$, or $\theta=\pi$, the result clearly holds for $0\leqslant\theta\leqslant\pi$.

If $0<\theta<\pi$, and if n and θ vary in such a way that $n\theta$ becomes indefinitely great, it follows from the above result that $P_n(\cos\theta)$ tends to the limit zero. This result has been otherwise established by Bruns.* It is well known that, if, as n increases indefinitely, $n\theta$ tends to a finite limit ρ, then

$$\lim_{n=\infty}P_n(\cos\theta)=J_0(\rho).$$

---

* *Crelle's Journal*, Vol. xc., p. 322. See also Heine's *Kugelfunctionen*, Vol. II., pp. 361–363.

2. The sum of the first $n+1$ terms of the series for the representation of a function $f(x)$ by means of Legendre's functions is*

$$\int_{-1}^{1} \frac{n+1}{2} \frac{P_{n+1}(x)\,P_n(x') - P_n(x)\,P_{n+1}(x')}{x-x'} f(x')\,dx'.$$

We have here to consider the values of

$$\int_{-1}^{-1+\epsilon} \frac{n+1}{2} \frac{P_{n+1}(x)\,P_n(x') - P_n(x)\,P_{n+1}(x')}{x-x'} f(x')\,dx',$$

with the similar integral taken between the limits $1-\epsilon$ and 1. The point x is taken to be interior to the interval $(-1, 1)$. We may assume ϵ to be so small that $x+1-\epsilon \geqslant \mu$, where μ is a fixed positive number.

We have

$$(n+1)^{\frac{3}{2}} \int_{-1}^{-1+\epsilon} \frac{P_n(x')}{x-x'} f(x')\,dx' = (n+1)^{\frac{3}{2}} \int_{-1}^{-1+\epsilon} \frac{(1-x'^2)^{\frac{1}{4}}\,P_n(x')}{x-x'} \frac{f(x')}{(1-x'^2)^{\frac{1}{4}}}\,dx';$$

now let it be assumed that $\dfrac{f(x')}{(1-x'^2)^{\frac{1}{4}}}$ has a Lebesgue integral in the whole interval $(-1, 1)$; then the above expression is numerically less than

$$\frac{k}{\mu} \int_{-1}^{-1+\epsilon} \left| \frac{f(x')}{(1-x'^2)^{\frac{1}{4}}} \right| dx',$$

where k is a positive number, such that

$$(n+1)^{\frac{1}{2}}\,(1-x'^2)^{\frac{1}{4}}\,P_n(x') < k,$$

for all values of n and x', in accordance with the theorem established in § 1. It follows that ϵ may be so chosen that the numerical value of

$$(n+1)^{\frac{1}{2}} \int_{-1}^{-1+\epsilon} \frac{P_n(x')}{x-x'} f(x')\,dx'$$

is less than an arbitrarily chosen positive number, for all values of n, and for all values of x in an interval interior to $(-1, 1)$.

Since $(n+1)^{\frac{1}{2}}\,P_{n+1}(x)$ is numerically less than a fixed positive number, for all points x in such an interval, we see that ϵ can be so chosen that

$$\int_{-1}^{-1+\epsilon} \frac{n+1}{2} \frac{P_{n+1}(x)\,P_n(x')}{x-x'} f(x')\,dx'$$

is, in numerical value, less than an arbitrarily chosen positive number ζ.

* See *Proc.*, Ser. 2, Vol. 6, pp. 388-395.

As the same argument applies to

$$\int_{-1}^{-1+\epsilon} \frac{n+1}{2} \frac{P_n(x)\,P_{n+1}(x')}{x-x'}\,dx',$$

we see that ϵ can be so chosen that

$$\left| \int_{-1}^{-1+\epsilon} \frac{n+1}{2} \frac{P_{n+1}(x)\,P_n(x')-P_n(x)\,P_{n+1}(x')}{x-x'} f(x')\,dx' \right| < \xi$$

for all values of n, and for all values of x in a prescribed interval interior to $(-1, 1)$. A similar proof applies to the case when the limits of integration are $1-\epsilon$ and 1.

Let $f_1(x)$ be a function such that $f_1(x) = f(x)$ in the interval $(-1+\epsilon, 1-\epsilon)$, and such that $f_1(x) = 0$ when $-1 \leqslant x < -1+\epsilon$, and when $1-\epsilon < x \leqslant 1$. Since the function $f_1(x)$ is of limited total fluctuation in the neighbourhoods of the points -1, $+1$, the result obtained in my earlier paper (*loc. cit.*, p. 395) is applicable to this function. Therefore

$$\int_{-1+\epsilon}^{1-\epsilon} \frac{n+1}{2} \frac{P_{n+1}(x)\,P_n(x')-P_n(x)\,P_{n+1}(x')}{x-x'} f(x')\,dx'$$

differs from $\frac{1}{2}\{f(x+0)+f(x-0)\}$ by less than ξ, provided n is not less than some fixed integer n_1, and provided x is a point in the interval $(-1+\epsilon+\mu, 1-\epsilon-\mu)$ for which point a neighbourhood exists in which the function is of limited total fluctuation.

It now follows that

$$\int_{-1}^{1} \frac{n+1}{2} \frac{P_{n+1}(x)\,P_n(x')-P_n(x)\,P_{n+1}(x')}{x-x'} f(x')\,dx'$$

differs from $\frac{1}{2}\{f(x+0)+f(x-0)\}$ by less than 3ξ, for $n \geqslant n_1$, where x satisfies the condition just stated.

The following theorem has now been established :—

Let $f(x)$ be a function [limited or unlimited in $(-1, 1)$] such that $\frac{f(x)}{(1-x^2)^{\frac{1}{4}}}$ has a Lebesgue integral in the interval $(-1, +1)$. It is sufficient for the convergence of the series

$$\sum_{n=0} \frac{2n+1}{2} P_n(x) \int_{-1}^{1} f(x')\,P_n(x')\,dx'$$

to the value $\frac{1}{2}\{f(x+0)+f(x-0)\}$, at any point x in the interior of the interval $(-1, 1)$, that a neighbourhood of the point x should exist in which $f(x)$ is of limited total fluctuation.

In any interval in which $f(x)$ is continuous, and which is contained

in the interior of another interval in which the function has limited total fluctuation, the convergence of the series to the value of $f(x)$ is uniform.

The condition that $\frac{f(x)}{(1-x^2)^{\frac{1}{4}}}$ should have a Lebesgue integral is equivalent to the conditions that $f(x)$ should have a Lebesgue integral in $(-1, 1)$, and that the two Lebesgue integrals $\int_{-1}^{-1+\eta} \frac{f(x)}{(1+x)^{\frac{1}{4}}}\,dx$, $\int_{1-\eta}^{1} \frac{f(x)}{(1-x)^{\frac{1}{4}}}\,dx$ should also exist.

In case $|f(x)|$ has finite upper limits in neighbourhoods of the points $1, -1$, the existence of $\int_{-1}^{1} f(x)\,dx$ is sufficient to ensure that $\int_{-1}^{1} \frac{f(x)}{(1-x^2)^{\frac{1}{4}}}\,dx$ also exists.

More generally, it is sufficient that $f(x)$ should have a Lebesgue integral in $(-1, 1)$, and that $|f(x)| < \frac{A}{(1+x)^k}$ in a neighbourhood of the point -1, and $|f(x)| < \frac{A'}{(1-x)^{k'}}$ in a neighbourhood of the point 1, where k and k' are each less than $\frac{3}{4}$, and A, A' are positive numbers. The known logarithmic conditions for the convergence of an integral in the neighbourhood of a singularity are also sufficient.

A particular case of this theorem has been given by Darboux,* who shewed that, if $f(x)$ has the values $\frac{A}{(1+x)^k}$, $\frac{A'}{(1-x)^{k'}}$, where $k < \frac{3}{4}$, $k' < \frac{3}{4}$, in neighbourhoods of the points $-1, 1$, the series is so far convergent.

It may be observed that the above general theorem may be proved directly by employing the general convergence theorem (*loc. cit.*, p. 350), and proceeding as in my earlier paper.

For this purpose we take

$$F(x', x, n) = \frac{n+1}{2}(1-x'^2)^{\frac{1}{2}} \frac{P_{n+1}(x)\,P_n(x') - P_n(x)\,P_{n+1}(x')}{x-x'},$$

and verify that $|F(x', x, n)|$ is less than a fixed positive number for all values of x' in the interval $(-1, 1)$, for all values of x in an interval $(-1+\epsilon, 1-\epsilon)$, and such that $|x-x'| \geqslant \mu$, and for all values of n. It can then be verified, as before (*loc. cit.*, pp. 389, 390) that

$$\left| \int_{\alpha_1}^{\beta_1} F(x', x, n)\,dx' \right| < \frac{1}{\mu n^{\frac{1}{2}}} |\alpha(n)|,$$

* See *Liouville's Journal*, Ser. 3, Vol. IV., p. 393.

only a slight modification of method being necessary on account of the existence of the factor $(1-x'^2)^{\frac{1}{4}}$. In the rest of the work, the function $f(x)$ must then be replaced by $\frac{f(x)}{(1-x^2)^{\frac{1}{4}}}$, and the convergence of

$$\frac{n+1}{2}\int_{-1}^{1}\frac{P_{n+1}(x)\,P_n(x')-P_n(x)\,P_{n+1}(x')}{x-x'}f(x')\,dx'$$

is then established, subject to the conditions stated in the theorem.

3. It will now be shewn that, if in the neighbourhood of the point -1, $f(x')$ is of the form $\frac{A}{(1+x')^k}+f_1(x')$, where $k \geqslant \frac{3}{4}$, and $f_1(x')$ is limited in the neighbourhood, then the series does not converge at the point x interior to the interval $(-1, 1)$. It is clear that, in a sufficiently small neighbourhood of the point -1, $\frac{f(x')}{x-x'}$ is of the form

$$\frac{B}{(1+x')^k}+f_2(x'),$$

where $f_2(x')$ is limited in the neighbourhood.

It will be sufficient to prove that

$$\int_{-1}^{1}\frac{n^{\frac{1}{2}}P_n(x')}{(1+x')^k}\,dx'$$

does not converge to a definite limit, when n is indefinitely increased, provided $k \geqslant \frac{3}{4}$; the condition that $k < 1$ is necessary for the existence of the integral. For it then follows that $\int_{-1}^{-1+\epsilon}\frac{n^{\frac{1}{2}}P_n(x')}{(1+x')^k}\,dx$ does not converge to a definite limit, when n is indefinitely increased, and therefore the same holds of

$$\frac{n+1}{2}\int_{-1}^{1}\frac{P_{n+1}(x)\,P_n(x')}{(1+x')^k}\,dx'.$$

We have $P_n(x') = A_0+A_1\left(\frac{1+x'}{2}\right)+A_2\left(\frac{1+x'}{2}\right)^2+\ldots+A_n\left(\frac{1+x'}{2}\right)^n$,

where $$A_0+A_1+\ldots+A_n = 1.$$

Hence, we find that

$$n^{\frac{1}{2}}\int_{-1}^{1}\frac{P_n(x')}{(1+x')^k}\,dx' = n^{\frac{1}{2}}.2^{1-k}\left[\frac{A_0}{1-k}+\frac{A_1}{2-k}+\ldots+\frac{A_n}{n+1-k}\right]$$

$$= n^{\frac{1}{2}}.2^{1-k}(-1)^n\frac{k(k+1)\ldots(k+n-1)}{(1-k)(2-k)\ldots(n+1-k)},$$

since the integral vanishes for the values $0, -1, -2, \ldots -(n-1)$, of k. The expression on the right-hand side may be written in the form

$$(-1)^n n^{\frac{1}{2}} . 2^{1-k} \frac{\Pi(k+n-1)}{\Pi(k-1)} \frac{\Pi(-k)}{\Pi(n+1-k)};$$

and the asymptotic value of this is $(-1)^n e^{-2k+2} . 2^{1-k} \frac{\Pi(-k)}{\Pi(k-1)} n^{2(k-1)+\frac{1}{2}}$. If $k > \frac{3}{4}$, this increases indefinitely as n does so; and if $k = \frac{3}{4}$, it has no determinate value. If $k < \frac{3}{4}$, it converges to zero, when n is indefinitely increased.

It therefore appears that, *if the function $f(x)$ is of the form*

$$\frac{A}{(1+x)^k} + f_1(x)$$

in the neighbourhood of the point -1, where $k \geqslant \frac{3}{4}$, then the series does not converge at any point x interior to the interval $(-1, 1)$.

That the convergence of the series may be, throughout the interval, destroyed by the effect of the values of the function in the neighbourhoods of the points $-1, 1$, is illustrated by this result.*

4. There remains the consideration of the convergence of the series at the end-points of the interval $(-1, 1)$. This is a matter of some importance, because, in accordance with the usual method of investigating the convergence of the expansion of a function in spherical surface harmonics, the convergence of the expansion of a certain subsidiary function in a series of Legendre's functions at one of the ends of the interval of representation is decisive in relation to the convergence of the series of surface harmonics.

It appears that, if $f(x)$ be a function which possesses a Lebesgue integral in the interval $(-1, 1)$, the existence of neighbourhoods of the points $-1, 1$ in which $f(x)$ is of limited total fluctuation is not sufficient to ensure that the series

$$\sum_{n=0} \frac{2n+1}{2} P_n(x) \int_{-1}^{1} f(x') P_n(x') dx'$$

converges at those points. It is however sufficient, although not necessary, that $f(x)$ should be of limited total fluctuation in the whole interval $(-1, 1)$.

* This result was given by Darboux. See *Liouville's Journal*, Ser. 3, Vol. VIII., p. 393.

Let us consider the series at the point $x = 1$; the sum of the first $2n+1$ terms is

$$\frac{n+1}{2}\int_{-1}^{1}\frac{P_n(x')-P_{n+1}(x')}{1-x'}f(x')\,dx'.$$

We shall first estimate the limit, when n is indefinitely increased, of

$$\frac{n+1}{2}\int_{\alpha}^{\beta}\frac{P_n(x')-P_{n+1}(x')}{1-x'}f(x')\,dx',$$

where $$-1 < \alpha < \beta < 1.$$

On substitution of the expressions for $P_n(x')$, $P_{n+1}(x')$ given in § 1, and which are valid for the interval (α, β) of x', it is easily seen that the limit is the same as that of

$$\frac{n^{\frac{1}{2}}}{2}\left(\frac{2}{\pi}\right)^{\frac{1}{2}}\int_{\alpha}^{\beta}\left[\cos\left\{(n+\tfrac{1}{2})\theta'-\frac{\pi}{4}\right\}\right.$$
$$\left.-\cos\left\{(n+\tfrac{3}{2})\theta'-\frac{\pi}{4}\right\}\right](\sin\theta')^{-\frac{1}{2}}\frac{f(x')}{1-x'}\,dx',$$

where $x' = \cos\theta'$; and this is of the form

$$n^{\frac{1}{2}}\left(\frac{2}{\pi}\right)^{\frac{1}{2}}\int_{p}^{q}\sin\left\{(n+1)\theta'-\frac{\pi}{4}\right\}F(\theta')\,d\theta',$$

where $0 < p < q < \pi$.

If $f(x')$ have a Lebesgue integral in the interval (α, β), then $F(\theta')$ has a Lebesgue integral in the interval (p, q). It then follows, from a corollary to the fundamental convergence theorem given in my earlier paper (p. 355), that

$$\lim_{n=\infty}\int_{p}^{q}\sin\left\{(n+1)\theta'-\frac{\pi}{4}\right\}F(\theta')\,d\theta' = 0,$$

but it does not necessarily follow that

$$\lim_{n=\infty} n^{\frac{1}{2}}\int_{p}^{q}\sin\left\{(n+1)\theta'-\frac{\pi}{4}\right\}F(\theta')\,d\theta' = 0.$$

If, however, $f(x')$ is of limited total fluctuation in the interval (α, β), in which case $F(\theta')$ is of limited total fluctuation in (p, q), the latter equality holds. To see this we may take $F(\theta')$ to be the difference of two functions $F_1(\theta')$, $F_2(\theta')$, each of which is monotone in (p, q). We have then

$$\int_{p}^{q}\sin\left\{(n+1)\theta'-\frac{\pi}{4}\right\}F_1(\theta')\,d\theta'$$
$$= F_1(p+0)\int_{p}^{\lambda}\sin\left\{(n+1)\theta'-\frac{\pi}{4}\right\}d\theta' + F_1(q-0)\int_{\lambda}^{q}\sin\left\{(n+1)\theta'-\frac{\pi}{4}\right\}d\theta',$$

where λ is a number such that $p \leqslant \lambda \leqslant q$. The integral on the left-hand side is consequently not greater, in absolute value, than

$$\frac{2}{n+1}\{|F_1(p+0)|+|F_1(q-0)|\}.$$

It therefore follows that

$$\lim_{n=\infty} n^{\frac{1}{2}}\int_p^q \sin\left\{(n+1)\theta'-\frac{\pi}{4}\right\} F_1(\theta')\,d\theta' = 0.$$

We may clearly substitute $F_2(\theta')$, and therefore also $F(\theta')$ in this result. It follows that, if $f(x')$ have limited total fluctuation in (α, β), then

$$\lim_{n=\infty} \frac{n+1}{2}\int_\alpha^\beta \frac{P_n(x')-P_{n+1}(x')}{1-x'} f(x')\,dx' = 0.$$

Let us next suppose that, in the neighbourhood $(\xi-\eta, \xi+\eta)$ of a point ξ in the interior of the interval (α, β), $f(x)$ is of the form $\frac{A}{(x-\xi)^k}+\phi(x)$, where $0 < k < 1$, and $\phi(x)$ is of limited total fluctuation in the interval $(\xi-\eta, \xi+\eta)$. We may assume that in the intervals $(\alpha, \xi-\eta)$, $(\xi+\eta, \beta)$ the function $f(x)$ is of limited total fluctuation; thus $f(x)$ has a single infinite discontinuity at the point ξ.

In this case, we see that in $(\xi-\eta, \xi+\eta)$ the function $F(\theta')$ is of the form $\frac{B}{(\theta'-\gamma)^k}+F_1(\theta')$, where $\cos\gamma = \xi$, and where $F_1(\theta')$ is of limited total fluctuation in $(\xi-\eta, \xi+\eta)$.

We then see that, to estimate the effect of the infinite discontinuity we have to evaluate

$$\lim_{n=\infty} n^{\frac{1}{2}}\int_{\gamma-\eta_1}^{\gamma+\eta_2} \frac{B}{(\theta'-\gamma)^k}\sin\left\{(n+1)\theta'-\frac{\pi}{4}\right\} d\theta'$$

or

$$\lim_{n=\infty} Bn^{\frac{1}{2}}\int_{-\eta_1}^{\eta_2} \frac{1}{u^k}\sin\left\{(n+1)u+(n+1)\gamma-\frac{\pi}{4}\right\} du.$$

Writing $(n+1)u = v$, we see that the limit is dependent upon

$$\lim_{n=\infty} n^{k-\frac{1}{2}}\int_{-(n+1)\eta_1}^{(n+1)\eta_2} \frac{\sin v}{v^k}\,dv \quad \text{and} \quad \lim_{n=\infty} n^{k-\frac{1}{2}}\int_{-(n+1)\eta_1}^{(n+1)\eta_2} \frac{\cos v}{v^k}\,dv.$$

If $k < \frac{1}{2}$, both these latter limits exist, and are zero. If $k = \frac{1}{2}$, the required limit has no definite value. In case $\frac{1}{2} < k < 1$, the expression increases indefinitely as n does so.

It has now been shewn that, in case there is an infinite discontinuity of the function $f(x)$ at a point ξ, of order $\geqslant \frac{1}{2}$, it is impossible that

$$\lim_{n=\infty} \frac{n+1}{2} \int_{\alpha}^{\beta} \frac{P_n(x') - P_{n+1}(x')}{1-x'} f(x')\, dx' = 0,$$

it being assumed that the function is of limited total fluctuation, except in the neighbourhood of the point ξ. In this case, although $f(x)$ may have a Lebesgue integral in the whole interval $(-1, 1)$, and, although the function may have limited total fluctuation in neighbourhoods of the points -1, 1, it is impossible that the series should converge at those points.

It may also happen that the above limit does not exist, and therefore that the series does not converge at the point 1, when $f(x)$ is limited in (α, β) without being of limited total fluctuation. Therefore the series corresponding to a function which is limited in $(-1, 1)$ and has a Lebesgue integral in that interval does not necessarily converge at the point 1.

For the purpose of considering those parts of the integral which represents the sum of the first $n+1$ terms of the series at $x = 1$ which are in the neighbourhood of the points 1, -1, it is convenient to replace $\frac{n+1}{2} \frac{P_n(x') - P_{n+1}(x')}{1-x'}$ by the equivalent expression

$$\tfrac{1}{2} \left(\frac{dP_n(x')}{dx'} + \frac{dP_{n+1}(x')}{dx'} \right).$$

We have then to consider the integrals

$$\tfrac{1}{2} \int_{-1}^{-1+\epsilon} \left\{ \frac{dP_n(x')}{dx'} + \frac{dP_{n+1}(x')}{dx'} \right\} f(x')\, dx',$$

$$\tfrac{1}{2} \int_{-1-\epsilon}^{1} \left\{ \frac{dP_n(x')}{dx'} + \frac{dP_{n+1}(x')}{dx'} \right\} f(x')\, dx'.$$

Let it be assumed that $f(x')$ is monotone in each of the intervals $(-1, -1+\epsilon)$, $(1-\epsilon, 1)$. The first integral is then equivalent to

$$\tfrac{1}{2} \{P_n(-1+\mu) + P_{n+1}(-1+\mu)\} \{f(-1+0) - f(-1+\epsilon)\}$$
$$+ \tfrac{1}{2} \{P_n(-1+\epsilon) + P_{n+1}(-1+\epsilon)\} f(-1+\epsilon),$$

where μ is such that $\theta \leqslant \mu \leqslant \epsilon$. This expression is numerically less than

$$\zeta + \tfrac{1}{2} |f(-1+\epsilon) \{P_n(-1+\epsilon) + P_{n+1}(-1+\epsilon)\}|,$$

if ϵ be so chosen that $|f(-1+0) - f(-1+\epsilon)| < \zeta$.

The number ϵ having been fixed, corresponding to an arbitrarily fixed positive number ξ, and also so that

$$|f(1-0)-f(1-\epsilon)| < \xi,$$

we can determine a number n_1 such that

$$\left| \tfrac{1}{2} \int_{-1}^{-1+\epsilon} \left\{ \frac{dP_n(x')}{dx'} + \frac{dP_{n+1}(x')}{dx'} \right\} f(x')\,dx' \right| < 2\xi,$$

when $n \geqslant n_1$.

In a similar manner, we have

$$\begin{aligned} \tfrac{1}{2} \int_{1-\epsilon}^{1} & \left\{ \frac{dP_n(x')}{dx'} + \frac{dP_{n+1}(x')}{dx'} \right\} f(x')\,dx' \\ &= f(1-0) + \tfrac{1}{2} \{P_n(1-\mu') + P_{n+1}(1-\mu')\} \{f(1-\epsilon) - f(1-0)\} \\ &\quad - \tfrac{1}{2} f(1-\epsilon) [P_n(1-\epsilon) + P_{n+1}(1-\epsilon)]. \end{aligned}$$

It then follows that a number n_2 can be so determined that

$$\left| \tfrac{1}{2} \int_{1-\epsilon}^{1} \left\{ \frac{dP_n(x')}{dx'} + \frac{dP_{n+1}(x')}{dx'} \right\} f(x')\,dx' - f(1-0) \right| < 2\xi, \quad \text{for } n \geqslant n_2.$$

If now $f(x)$ satisfies sufficient conditions that

$$\lim_{n=\infty} \int_{-1+\epsilon}^{1-\epsilon} \frac{n+1}{2} \frac{P_n(x') - P_{n+1}(x')}{1-x'} f(x')\,dx' = 0,$$

an integer n_3 can be determined such that

$$\left| \int_{-1+\epsilon}^{1-\epsilon} \frac{n+1}{2} \frac{P_n(x') - P_{n+1}(x')}{1-x'} f(x')\,dx' \right| < \xi, \quad \text{for} \quad n \geqslant n_3.$$

Let n' be the greatest of the three integers n_1, n_2, n_3; we have then

$$\left| \int_{-1}^{1} \frac{n+1}{2} \frac{P_n(x') - P_{n+1}(x')}{1-x'} f(x')\,dx' - f(1-0) \right| < 5\xi,$$

if $n \geqslant n'$. Since ξ is arbitrarily small, it has thus been shewn that, subject to the conditions assumed to be satisfied,

$$\lim_{n=\infty} \int_{-1}^{1} \frac{n+1}{2} \frac{P_n(x') - P_{n+1}(x')}{1-x'} f(x')\,dx' = f(1-0).$$

The case of the convergence of the series at the point -1 may be treated in an exactly similar manner.

The following theorem has now been established :—

Let $f(x)$ be a function which is of limited total fluctuation in neighbourhoods of the points $x = 1$, $x = -1$. For the convergence of the series of Legendre's functions corresponding to $f(x)$, at the points 1, -1 to the values $f(1-0)$, $f(-1+0)$, it is insufficient that $f(x)$ have a Lebesgue integral in the whole interval $(-1, 1)$. It is, however, sufficient that $f(x)$ be of limited total fluctuation in $(-1, 1)$. It is also sufficient that $f(x)$ be of limited total fluctuation when the neighbourhoods of a finite number of points in the interior of $(-1, 1)$ are excluded, provided also that in each such neighbourhood of such a point ξ, $f(x)$ is of the form $\frac{A}{(x-\xi)^k} + \phi(x)$, where $0 < k < \frac{1}{2}$, and where $\phi(x)$ is of limited total fluctuation. In case, for such a point ξ, $k \geqslant \frac{1}{2}$, the series does not converge to $f(1-0)$, $f(-1+0)$ at the points 1, -1.

A NOTE ON THE CONTINUITY OR DISCONTINUITY OF A FUNCTION DEFINED BY AN INFINITE PRODUCT

By G. H. HARDY.

[Received October 15th, 1908.—Read November 12th, 1908.]

1. Abel's well known theorem on the continuity of power series naturally suggests the question as to whether a similar theorem holds for infinite products. Does the convergence of the product

$$P = \prod_0^\infty (1+a_n) \tag{1}$$

involve the absolute convergence of the product

$$P_1(x) = \prod_0^\infty (1+a_n x^n) \tag{2}$$

for all values of x whose modulus is less than unity, and the truth of the equation

$$P_1(x) \to P$$

as $x \to 1$? The path along which $x \to 1$ is here supposed to be any such path as is permitted in Stolz's extension of Abel's theorem, that is to say, any path which lies inside the unit circle, has a tangent at every point, and does not touch the circle. Such a path we shall describe for brevity as a *standard* path.*

This question immediately suggests another: does the convergence of (1) involve that of

$$P_2(x) = \prod_0^\infty (1+a_n x) \tag{3}$$

for all values of x, and the truth of the equation

$$P_2(x) \to P \tag{4}$$

when $x \to 1$ in any manner?

2. If the product (1) is absolutely convergent, that is to say, if the series Σa_n is absolutely convergent, it can be shown at once that all these questions must be answered in the affirmative.

---

* Paths which have no tangents may be dismissed from consideration; no interest attaches to them, and the only result of admitting them is a little unnecessary complication of our definitions.

The question stated above was, if I remember rightly, first suggested to me personally by Prof. V. Ramaswami Aiyar of Gooty, India, in a letter which I received from him a year or two ago.

The simplest proof of this depends upon what Mr. Bromwich has called Tannery's theorem—viz., that, if

$$|g_n(x)| < M_n,$$

where M_n is independent of x, and ΣM_n is convergent, throughout any region D of values of x, then

$$\Pi\{1+g_n(x)\} \tag{5}$$

is uniformly convergent throughout D. If every $g_n(x)$ is continuous, the product is, of course, also continuous.

We shall denote by D_1 any region bounded by a standard curve beginning and ending at the point $x = 1$; and by D_2 any region bounded by a closed curve and including the point $x = 1$. Then

$$|a_n x^n| \leqslant |a_n|$$

throughout D_1; and

$$|a_n x| \leqslant R|a_n|$$

throughout D_2, R being the greatest distance of any point of D_2 from the origin; and it follows at once that $P_1(x)$ and $P_2(x)$ are uniformly convergent throughout D_1 and D_2 respectively, the boundaries of the regions included.

A theorem similar to Tannery's, rather more general, but rather less simple and natural, was given by Arzelà.* This theorem asserts that, if

(i.) $g_n(x)$ tends uniformly to zero, as $n \to \infty$, for all values of x in D;

(ii.) $\sum_{\nu=0}^{n} |g_\nu(x)| < K$ for all values of n and x;†

then the uniform convergence of $\Sigma g_n(x)$ is a *sufficient* condition for that of $\Pi\{1+g_n(x)\}$.‡

---

* *Mem. di Bologna*, ser. 4, t. IV. (1883), p. 427; Stolz und Gmeiner, *Einleitung in die Funktionentheorie*, bd. II, p. 431.

† If Tannery's condition $|g_n(x)| < M_n$, where ΣM_n is convergent, is satisfied, it is evident that Arzelà's two conditions are satisfied. The converse is not true. Suppose, for example, that

$$g_0(x) = 1 \quad (0 \leqslant x < \tfrac{1}{2}), \qquad g_0(x) = 0 \quad (\textit{otherwise});$$
$$g_1(x) = \tfrac{1}{2} \quad (\tfrac{1}{2} \leqslant x < \tfrac{3}{4}), \qquad g_1(x) = 0 \quad (\textit{otherwise});$$
$$g_2(x) = \tfrac{1}{3} \quad (\tfrac{3}{4} \leqslant x < \tfrac{7}{8}), \qquad g_2(x) = 0 \quad (\textit{otherwise});$$
$$\cdots \quad \cdots \quad \cdots \qquad \cdots \quad \cdots \quad \cdots$$
$$g_n(x) = \frac{1}{n+1} \quad (1-2^{-n} \leqslant x < 1-2^{-n-1}), \qquad g_n(x) = 0 \ (\textit{otherwise}).$$

Then it is clear that $\sum_{\nu=0}^{n} |g_\nu(x)| < 1$, and that $g_n(x) \to 0$ uniformly; but Tannery's condition is not satisfied, since $\Sigma(1/n)$ is divergent. There is no difficulty in constructing a similar example in which every g_n is continuous.

‡ If x and $g_n(x)$ are restricted to be real, the condition is also *necessary*.

It is plain that our results concerning the products $\Pi(1+a_n x^n)$, $\Pi(1+a_n x)$ can be deduced at once from Arzelà's as well as from Tannery's theorem.

3. We may now pass on to consider the more interesting case in which the product (1) is only *conditionally* convergent. So far as I am aware, the only general tests of any importance that have ever been given for the conditional convergence of a product are Cauchy's test—viz.,

> *the product* $\Pi(1+a_n)$ *is convergent if* Σa_n *is convergent and* Σa_n^2 *absolutely convergent;*

and Pringsheim's extension of Cauchy's test—viz.,

> *the product is convergent if* Σa_n, Σa_n^2, ..., Σa_n^{k-1} *are convergent and* Σa_n^k *absolutely convergent.**

A product which is convergent in virtue of Cauchy's or Pringsheim's tests we shall call a *regularly convergent* product.

4. THEOREM A.—*If the product* (1) *is regularly convergent, all the questions of* § 1 *may be answered in the affirmative.*

This result I shall deduce from the following general theorem:—

THEOREM B.—*If the series*†

$$\Sigma g_n(x),\ \Sigma g_n^2(x),\ \ldots,\ \Sigma g_n^{k-1}(x),\ \Sigma |g_n^k(x)|$$

are uniformly convergent throughout any region D in the plane of x, *then the product*

$$\Pi\{1+g_n(x)\}$$

is uniformly convergent throughout D.

This theorem is very easy to prove. We can choose n_0 so that, for $n \geqslant n_0$, $|g_n| < \delta < 1$, for all values of x in question. We can then ignore the first n_0 factors, so that nothing is lost by supposing $|g_n| < \delta$

---

* Pringsheim, *Math. Annalen*, bd. XXII., p. 482; Stolz und Gmeiner, *l.c.*, p. 436. The latter test may be stated in the more general form "the product is convergent if

$$\Sigma\left(a_n - \tfrac{1}{2}a_n^2 + \ldots \pm \frac{1}{k-1}\, a_n^{k-1}\right)$$

is convergent and Σa_n^k absolutely convergent," but the extension seems of but little interest.

If a_n is real, Σa_n^2 can, of course, only converge absolutely or diverge to $+\infty$; the product converges or diverges to 0 accordingly. In this case Pringsheim's extension cannot be needed.

† More generally, if $\Sigma\left(g_n - \tfrac{1}{2}g_n^2 + \ldots \pm \frac{1}{k-1}\, g_n^{k-1}\right)$, $\Sigma |g_n^k|$ are uniformly convergent.

for all values of n and x. Then

$$\log(1+g_n) = g_n - \tfrac{1}{2}g_n^2 + \ldots + \frac{(-1)^k}{k-1}\, g_n^{k-1} + (-1)^{k+1}\phi_n,$$

where

$$\phi_n = \frac{g_n^k}{k} - \frac{g_n^{k+1}}{k+1} + \ldots,$$

so that

$$|\phi_n| < \frac{|g_n|^k}{k}(1+\delta+\delta^2+\ldots) < \frac{|g_n^k|}{k(1-\delta)}.$$

Hence $\Sigma\phi_n$ is uniformly convergent, and so therefore is $\Sigma\log(1+g_n)$.

5. From Theorem B the truth of Theorem A follows almost immediately.

(i.) Let $g_n = a_n x^n$, and let D be the region D_1 of § 2. Then

$$\Sigma a_n,\ \Sigma a_n^2,\ \ldots,\ \Sigma a_n^{k-1},\ \Sigma|a_n^k|$$

are convergent, and therefore, by Stolz's extension of Abel's theorem,

$$\Sigma a_n x^n,\ \Sigma a_n^2 x^{2n},\ \ldots,\ \Sigma a_n^{k-1} x^{(k-1)n},\ \Sigma|a_n^k||x^{kn}|$$

are uniformly convergent throughout D_1.

(ii.) Let $g_n = a_n x$, and let D be the region D_2 of § 2. Then

$$\Sigma a_n x,\quad \Sigma a_n^2 x^2,\quad \ldots,\quad \Sigma a_n^{k-1} x^{k-1},\quad \Sigma\,|a_n^k|\,|x^k|$$

are uniformly convergent throughout D_2.

It is easy to deduce, from Theorem B and from the known extensions of Abel's theorem, more general results concerning products of the types

$$\Pi\{1+a_n f_n(x)\};$$

but the cases in which $f_n(x) = x^n$ or x seem so much the most interesting that it is hardly worth while to set any others out at length.

6. There still remains the case in which the product (1) is convergent but not regularly convergent, or, as we may say, *irregularly convergent.*

As regards such irregular convergence one may distinguish two possibilities.

(*a*) It is possible that the product $\Pi(1+a_n)$ may be convergent, although the series Σa_n is not convergent, and indeed even if the series diverges to $+\infty$. The following examples of this are interesting, and we shall have occasion to make use of them later on.

(i.) Consider the product*

$$\prod_{0}^{\infty}\left\{\left(1+\frac{1}{\sqrt{n-\frac{1}{2}}}\right)\left(1-\frac{1}{\sqrt{n+\frac{1}{2}}}\right)\right\}, \tag{6}$$

for which $$a_{2\nu}=\frac{1}{\sqrt{\nu-\frac{1}{2}}}, \qquad a_{2\nu+1}=-\frac{1}{\sqrt{\nu+\frac{1}{2}}}.$$

Here $(1+a_{2\nu})(1+a_{2\nu+1})=1$, so that the product is convergent, and has the value 1, although $\Sigma(a_{2\nu}+a_{2\nu+1})$ or

$$\Sigma\frac{1}{\nu-\frac{1}{4}}$$

diverges to $+\infty$.

(ii.) The product $$\Pi\left(1+\frac{e^{n\theta i}}{\sqrt{n}}\right)$$

is convergent, unless θ is a multiple of π,† since the series

$$\Sigma\frac{e^{n\theta i}}{\sqrt{n}}, \qquad \Sigma\frac{e^{2n\theta i}}{n}, \qquad \Sigma\frac{1}{n\sqrt{n}}$$

are convergent.

It follows that

$$\Pi\left|1+\frac{e^{n\theta i}}{\sqrt{n}}\right|^2=\Pi\left(1+\frac{2\cos n\theta}{\sqrt{n}}+\frac{1}{n}\right) \tag{7}$$

is convergent. But $$\Sigma\left(\frac{2\cos n\theta}{\sqrt{n}}+\frac{1}{n}\right)$$

plainly diverges to $+\infty$.

The product may also converge when some of the later members of the sequence of series

$$\Sigma a_n, \quad \Sigma a_n^2, \quad \ldots, \quad \Sigma a_n^{k-1}$$

oscillate or diverge. All such cases afford illustrations of our first possibility with respect to irregular convergence.

(*b*) The second possibility with respect to irregular convergence is that it should not be possible to find a value of k for which

$$\Sigma|a_n|^k$$

is convergent. Suppose, for example, that

$$a_n=\frac{e^{n\theta i}}{\log n},$$

where θ/π is *irrational*. Then Σa_n^k is convergent for *all* values of k, but

* This product is used by Pringsheim (*Math. Annalen*, bd. XXXIII., p. 154) for another purpose.

† The product diverges to infinity if θ is a multiple of 2π, to 0 if θ is an odd multiple of π.

never absolutely. And, so far as the tests at our disposal at present go, the question of the convergence of the product

$$\Pi\left(1+\frac{e^{n\theta i}}{\log n}\right) \tag{8}$$

remains open.

7. I shall return to the second possibility in a moment. But first I wish to show, by means of examples drawn from the first class of irregularly convergent products, that the *mere* convergence of the product (1) is *not* sufficient to ensure an affirmative answer to the questions of § 1.

(i.) *The convergence of* (1) *does not necessarily involve the convergence of* $\Pi(1+a_n x)$ *for any value of* x *other than* $x=0$ *and* $x=1$. We saw above that the product

$$\prod_0^\infty \left\{\left(1+\frac{1}{\sqrt{n}-\frac{1}{2}}\right)\left(1-\frac{1}{\sqrt{n}+\frac{1}{2}}\right)\right\}$$

is convergent. But

$$\prod_0^\infty \left\{\left(1+\frac{x}{\sqrt{n}-\frac{1}{2}}\right)\left(1-\frac{x}{\sqrt{n}+\frac{1}{2}}\right)\right\}$$

is convergent only if $\prod_{\nu=0}^\infty \left(1+\frac{a_\nu}{\nu-\frac{1}{4}}\right)$

is convergent, where $a_\nu = \frac{1}{4}-(x-\frac{1}{2})^2$;

and this is so only if $a_\nu = 0$, *i.e.*, if $x=0$ or $x=1$.

(ii.) The convergence of (1) does, of course, imply the absolute convergence of $\Pi(1+a_n x^n)$ for any value of x numerically less than unity. *But it does not imply the truth of the equation*

$$\Pi(1+a_n x^n) \to \Pi(1+a_n)$$

as $x \to 1$, *even by real values and when* a_n *is real.*

We saw in § 6 that the product

$$\prod_1^\infty \left(1+\frac{2\cos n\theta}{\sqrt{n}}+\frac{1}{n}\right) \tag{7}$$

is convergent, provided θ is not a multiple of π. Let us denote its value by ϖ. Then I shall prove that if

$$a_n = \frac{2\cos n\theta}{\sqrt{n}}+\frac{1}{n}$$

then

$$\prod_1^\infty (1+a_n x^n) \to 2\varpi \tag{8}$$

as $x \to 1$ by real values.

In order to prove this we observe that since $\Pi\left(1+\frac{e^{n\theta i}}{\sqrt{n}}\right)$ is *regularly* convergent

$$\Pi\left(1+\frac{e^{n\theta i}}{\sqrt{n}}\, x^n\right) \to \Pi\left(1+\frac{e^{n\theta i}}{\sqrt{n}}\right)$$

as $x \to 1$. It follows that the same relation holds between the products formed by taking the modulus of every factor, and therefore that

$$\Pi\left(1+\frac{2x^n \cos n\theta}{\sqrt{n}}+\frac{x^{2n}}{n}\right) \to \varpi.$$

Our conclusion will therefore be established if we prove that

$$\prod_1^\infty \left\{\frac{1+\frac{2x^n \cos n\theta}{\sqrt{n}}+\frac{x^n}{n}}{1+\frac{2x^n \cos n\theta}{\sqrt{n}}+\frac{x^{2n}}{n}}\right\} = \prod_1^\infty (1+\beta_n),$$

where

$$\beta_n = \frac{x^n(1-x^n)}{n+2x^n \cos n\theta \sqrt{n}+x^{2n}},$$

tends to the limit 2 as $x \to 1$. Now β_n is positive and less than K/n, and so the series $\Sigma\beta_n^2$ is uniformly convergent for $0 \leqslant x \leqslant 1$. Hence also the series

$$\Sigma\{\log(1+\beta_n)-\beta_n\}$$

is uniformly convergent, and so

$$\log \Pi(1+\beta_n)-\Sigma\beta_n \to 0.$$

We therefore require only to show that

$$\Sigma\beta_n \to \log 2.$$

But, if

$$\gamma_n = x^n(1-x^n)/n,$$

we have

$$\gamma_n-\beta_n = \frac{x^n(1-x^n)}{n}\,\frac{2x^n \cos n\theta \sqrt{n}+x^{2n}}{n+2x^n \cos n\theta \sqrt{n}+x^{2n}};$$

so that

$$|\gamma_n-\beta_n| < Kn^{-\frac{3}{2}}.$$

Hence $\Sigma(\gamma_n-\beta_n)$ is absolutely and uniformly convergent, and so

$$\Sigma\gamma_n-\Sigma\beta_n \to 0,$$

But
$$\Sigma\gamma_n = \Sigma\frac{x^n}{n} - \Sigma\frac{x^{2n}}{n} = \log\left(\frac{1}{1-x}\right) - \log\left(\frac{1}{1-x^2}\right)$$
$$= \log(1+x) \to \log 2;$$

and so our conclusion follows, viz., that

$$\Pi(1+a_n x^n) \to 2\Pi(1+a_n)$$

as $x \to 1$.

8. In conclusion, I wish to say something about the second possibility mentioned in § 6. This possibility seems to me very interesting. But I know of no example of such a product, and I am unable to construct one. Indeed, I cannot determine whether the product (8) is ever convergent or not; and the considerations which follow show, I think, that the question is not one which can be settled without considerable difficulty.

Let us consider first a simpler product, viz.,

$$\prod_1^\infty\left(1+\frac{e^{n\theta i}}{n^\alpha}\right) \quad (0<\alpha<1).$$

Let k be the least integer such that $k\alpha > 1$. The series Σa_n^k is absolutely convergent, the series

$$\Sigma a_n, \quad \Sigma a_n^2, \quad \ldots, \quad \Sigma a_n^{k-1}$$

are convergent unless one of $\theta, 2\theta, \ldots, (k-1)\theta$ is a multiple of 2π. Thus the product is regularly convergent unless θ/π has one of a limited number of rational values; if, *e.g.*, $\alpha = \frac{1}{2}$, $k = 3$, it is regularly convergent unless θ/π is an integer.

Now, let us consider the product (8), for which

$$a_n = e^{n\theta i}/\log n;$$

and let us suppose that θ/π is a rational fraction p/q. The series

$$\Sigma a_n^k = \Sigma\frac{e^{kn\theta i}}{(\log n)^k}$$

is conditionally convergent except for such values of k as make $k\theta/\pi$ an even integer.

First suppose p even. Then q is odd, and Σa_n^k is convergent, except for

$$k = q, 2q, 3q, \ldots,$$

while
$$a_n^q = (\log n)^{-q}.$$

Also
$$\log(1+a_n) = a_n - \tfrac{1}{2}a_n^2 + \ldots - \frac{1}{q-1}a_n^{q-1} + \frac{1}{q}a_n^q(1+\epsilon_n),$$

where $\epsilon_n \to 0$ with n. It follows at once that *the product* (8) *diverges* (*its*

associated product of moduli diverging to $+\infty$) *whenever* θ/π *is a rational fraction with an even numerator.*

Secondly, suppose p odd. Then Σa_n^k is convergent, except for

$$k = 2q,\ 4q,\ 6q,\ \ldots;$$

and an argument similar to that used above shows that *the product* (8) *diverges to* 0 *whenever* θ/π *is a rational fraction with an odd numerator.*

Thus the product (8) is certainly never convergent when θ/π is rational. Is it ever convergent? That, it seems to me, is a very interesting question; but I must confess myself entirely unable to answer it. I can only suggest the problem: *to find a product* $\Pi(1+a_n)$, *such that* Σa_n^k *is always convergent, but never absolutely, and whose convergence, divergence, or oscillation is capable of proof.*

It is hardly necessary to point out that the argument given above applies to any product $\Pi(1+a_n e^{n\theta i})$, where a_n is a positive function of n which tends steadily to 0 as $n \to \infty$, and which is such that

$$\Sigma a_n^{-k}$$

is divergent for all values of k.

THE ELIMINANT OF THREE QUANTICS IN TWO INDEPENDENT VARIABLES

By A. L. DIXON.

[Received October 14th, 1908.—Read November 12th, 1908.]

THE methods for finding the eliminant of three quantics ϕ, ψ, χ, which are discussed in this paper—with the exception of the straightforward application of Sylvester's dialytic method—depend on the function

$$(\phi(x, y),\ \lambda\psi(x, b)+\mu\psi(a, y),\ \chi(a, b))/(x-a)(y-b),$$

which takes the place of the corresponding function

$$(\phi(x)\,\psi(a)-\phi(a)\,\psi(x))/(x-a)$$

in the theory of the eliminant of two equations in a single variable, the importance of which was pointed out by Cayley.

It is noteworthy that if the standard form of a quantic in two variables be taken to be $\Sigma A_{rs}x^r y^s$ $(r \leqslant n,\ s \leqslant m)$, determinants strictly analogous to those of Bezout and Sylvester can be obtained (§§ 9–15), and that similar results can be found for quantics in any number of variables (§ 22).

The first eight paragraphs deal with the more usual standard form $\Sigma A_{rs}x^r y^s$ $(r+s \not> n)$; a method is given for finding the pure eliminant of any three such quantics, of the same or different degrees, but I have not been able to adapt this to quantics in more than two independent variables.

The other section of the paper (§§ 17–21) deals with the expression of the eliminant as a determinant whose constituents are functions of sets of pairs of arbitrary quantities, the results being analogous to those of my paper on a "Form of the Eliminant of Two Quantics," recently published by the Society.*

* *Proc. London Math. Soc.*, Ser. 2, Vol. 6, pp. 468–478.

CONTENTS.

§ 1.—The function $F(x, y, a, b)$, p. 51.
2.—The eliminant of three quantics ϕ, ψ, χ of degree n, as a determinant of order $2n^2 - n$, p. 52.
3.—Modifications when the quantics are of different degrees, p. 52.
4, 5, 6.—Calculation of the constituents of the determinant in terms of the coefficients of ϕ, ψ, χ, p. 54.
7.—The eliminant of three cubics, three quadratics, &c., p. 58.
Table of the eliminant of three cubics, pp. 56, 57.
8.—Another eliminant of similar form, p. 58.
9.—Quantics of the form $\Sigma A_{rs} x^r y^s$ ($r \leqslant n$, $s \leqslant m$), p. 59.
10.—First method. Determinant of order $2mn$, p. 59.
Table when $n = m = 2$, p. 60.
11.—Second method. Determinant of order $3mn$, p. 61.
Modifications for quantics of different degrees in one of the variables.
12.—Third method (dialytic). Determinant of order $6mn$, p. 61.
13.—Fourth method. Determinant of order $4mn$, p. 62.
14.—The square of the eliminant as a determinant, p. 63.
15.—Modifications when the quantics are of different degrees, p. 63.
16.—Dialytic determinant for a special form of unicursal curves, p. 65.
Eliminant of the equations of three conics, one point on each being known.
17.—Eliminants as determinants whose constituents are $F(a, b, \alpha, \beta)$, $\theta(\alpha, \beta)\,\phi(\alpha, \beta)$, ..., p. 66.
18.—Verification, p. 66.
19.—Direct proof, p. 67.
20.—Restrictions on the choice of a, b, α, β, p. 67.
21.—Special forms, p. 68.
22.—Analogous results for a greater number of variables, p. 68.

Cayley pointed out the importance of the function

$$(\phi(x)\,\psi(a) - \phi(a)\,\psi(x))/(x-a)$$

in the theory of elimination between two equations in one variable; the methods of elimination discussed in this paper depend for the most part on the use of an analogous function

$$(\phi(x, y),\ \psi(a, y),\ \chi(a, b))/(x-a)(y-b).$$

In this investigation of various expressions for the eliminant, I have used the language of algebra, or of geometry, just as I have found it convenient. As a notation for determinants I have used indifferently, (a_1, b_2, c_3) where a_1, b_2, c_3 is the principal diagonal, or $|a_1, a_2, a_3|$ where a_1, a_2, a_3 is the top row. Generally I have taken the quantics as not homogeneous in two variables x, y, but occasionally as homogeneous in three variables x, y, z.

1. Three quantics of the nth degree, $\phi(x, y)$, $\psi(x, y)$, $\chi(x, y)$ being given, consider the function

$$\begin{vmatrix} \phi(x, y), & \psi(x, y), & \chi(x, y) \\ \lambda\phi(x, b)+\mu\phi(a, y), & \lambda\psi(x, b)+\mu\psi(a, y), & \lambda\chi(x, b)+\mu\chi(a, y) \\ \phi(a, b), & \psi(a, b), & \chi(a, b) \end{vmatrix}$$

where λ, μ are two arbitrary constants.

If in this we put $x = a$, it vanishes, and also if we put $y = b$, and so it is divisible by $(x-a)(y-b)$. Call the quotient $F(x, y, a, b)$. Then $F(x, y, a, b)$ is of degree $2n-2$ in x and y, and also in a and b, and vanishes for a common solution of $\phi = 0$, $\psi = 0$, $\chi = 0$. Since a, b are arbitrary, $F(x, y, a, b) = 0$ is equivalent to as many equations as there are terms in a quantic of degree $2n-2$ in a, b, that is to $2n^2-n$ equations in general, each of them of degree $2n-2$, or less, in x and y.

Again, considering in the first place only the coefficient of λ, and changing columns into rows, we may write the determinant as

$$| \phi(x, y), \ \phi(x, b)-\phi(x, y), \ \phi(a, b)-\phi(x, b) |,$$

and now, expanding by Taylor's theorem, we have

$$\phi(a, b) = \phi(x, y)+(a-x)\frac{\partial\phi}{\partial x}+(b-y)\frac{\partial\phi}{\partial y}+\ldots,$$

$$\phi(x, b) = \phi(x, y)+(b-y)\frac{\partial\phi}{\partial y}+\frac{1}{2!}(b-y)^2\frac{\partial^2\phi}{\partial y^2}+\ldots,$$

so that, dividing the second column by $a-x$ and the third by $b-y$, we have

$$\left| \phi(x, y), \ \frac{\partial\phi}{\partial y}+\tfrac{1}{2}(b-y)\frac{\partial^2\phi}{\partial y^2}+\ldots, \ \frac{\partial\phi}{\partial x}+\tfrac{1}{2}(a-x)\frac{\partial^2\phi}{\partial x^2}+(b-y)\frac{\partial^2\phi}{\partial x\,\partial y}+\ldots \right|.$$

We see then from this, that $F(x, y, a, b)$ is of the form

$$\phi(x, y)\,\Phi(x, y, a, b)+\psi(x, y)\,\Psi(x, y, a, b)+\chi(x, y)\,\mathrm{X}(x, y, a, b),$$

where Φ, Ψ, X are of degree $2n-2$ in x, y, a, b altogether.

Thus the coefficient of $a^r b^s$ in $F(x, y, a, b)$ may be written

$$A(x, y)\,\phi(x, y)+B(x, y)\,\psi(x, y)+C(x, y)\,\chi(x, y),$$

where A, B, C are of degree $2n-2-(r+s)$, and we shall have occasion immediately to use the fact that if $r+s > n-1$, the coefficient of $a^r b^s$ will be included in the general form $A\phi+B\psi+C\chi$, where A, B, C are arbitrary functions of x, y of degree $n-2$.

2. Suppose now that we try and get the eliminant by taking a certain number, say ξ, of these equations derived from F, and 3η equations formed by multiplying ϕ, ψ, χ, by different powers and products of x and y, and then eliminating the various powers and products of x and y, as if they were independent variables.

Since the degree of the eliminant in the coefficients of each equation $\phi = 0$, $\psi = 0$, $\chi = 0$ is n^2, and the degree of F is $2n-2$, we must have

$$\xi+\eta = n^2, \qquad \xi+3\eta = 2n^2-n,$$

which give $$\eta = \tfrac{1}{2}n(n-1), \qquad \xi = \tfrac{1}{2}n(n+1).$$

Thus, as in Sylvester's method (Salmon, *Higher Algebra*, p. 86), we form $\frac{3}{2}n(n-1)$ equations by multiplying ϕ, ψ, χ by the $\frac{1}{2}n(n-1)$ terms of an equation of degree $n-2$, and add to these the $\frac{1}{2}n(n+1)$ equations obtained from F by equating to zero the coefficients of $a^r b^s$, where $r+s < n$, since, as has just been shewn, the other equations derived from F are not linearly independent of the $\frac{3}{2}n(n-1)$ equations already formed.

In general the result will be much simplified by taking either λ or μ equal to zero, for then $F(x, y, a, b)$ will contain one of the variables x, y to the power $n-1$ only, and the number of terms which occur in the $\frac{1}{2}n(n+1)$ equations will be $\frac{1}{2}n(3n-1)$ instead of $2n^2-n$, so that a block of $\frac{1}{2}n(n-1)\,\frac{1}{2}n(n+1)$ constituents of the resulting determinant will all be zero.

3. I go on to consider how far this method is applicable to quantics of different degrees. Let the degree of ϕ be n, of ψ be $n+p$, and of χ be $n+q$, and suppose that the eliminant is formed from ξ equations derived from $F(x, y, a, b)$ containing the coefficients of ϕ, ψ, χ in the third degree, one from each, and from η_1 equations of the first degree in the coefficients of ϕ, and η_2, η_3 equations of the first degree in the coefficients of ψ, χ, respectively. Then we must have

$$\xi+\eta_1 = n^2+np+nq+pq, \qquad \xi+\eta_2 = n^2+nq, \qquad \xi+\eta_3 = n^2+np.$$

The degree of

$$F(x, y, a, b) \equiv (\phi(x, y),\ \lambda\psi(x, b)+\mu\psi(a, y),\ \chi(a, b))$$

will be $2n+p+q-2$ in x, y, and the number of terms which occur in it is therefore $\frac{1}{2}(2n+p+q)(2n+p+q-1)$ which I will call M.

Now, if I take ξ equal to $\frac{1}{2}n(n+1)$ I shall have

$$\eta_1 = \tfrac{1}{2}(n+p+q)(n+p+q-1)-\tfrac{1}{2}p(p-1)-\tfrac{1}{2}q(q-1),$$
$$\eta_2 = \tfrac{1}{2}(n+q)(n+q-1)-\tfrac{1}{2}q(q-1),$$
$$\eta_3 = \tfrac{1}{2}(n+p)(n+p-1)-\tfrac{1}{2}p(p-1),$$
$$M = \xi+\eta_1+\eta_2+\eta_3+\tfrac{1}{2}p(p-1)+\tfrac{1}{2}q(q-1),$$
$$\xi = \tfrac{1}{2}n(n+1).$$

From this set of equations we see that, if p and q have either of the values zero or one, the eliminant may be formed in exactly the same way as before, namely, by adding to the $\frac{1}{2}n(n+1)$ equations obtained from the coefficients of $a^r b^s$ $(r+s<n)$ in $F(x, y, a, b)$ the equations formed by multiplying ϕ by the terms of a quantic of degree $n+p+q-2$, ψ by those of a quantic of degree $n+q-2$, and χ by those of a quantic of degree $n+p-2$.

But, further, if it should happen that ψ has a multiple point of order p, which we will take at the point $y=0$, $z=0$, and χ a multiple point of order q, which we will take at the point $x=0$, $z=0$ (or, in the language of algebra, if the highest power of x which occurs in ψ is x^n, and of y which occurs in χ is y^n), then it is not difficult to see that $F(x, y, a, b)$ has also at $y=0$, $z=0$, and $x=0$, $z=0$ multiple points of orders $p-1$ and $q-1$ respectively. Thus the effective number of terms of $F(x, y, a, b)$ when expanded in x, y is

$$M-\tfrac{1}{2}p(p-1)-\tfrac{1}{2}q(q-1) \quad (=\xi+\eta_1+\eta_2+\eta_3),$$

and to obtain the η_1 equations we must multiply ϕ by the terms of a quantic of degree $n+p+q-2$, in which the highest power of x is x^n, and of y, y^n; for the η_2 equations, ψ by those of a quantic of degree $n+q-2$, the highest power of y being y^n; for the η_3, χ by those of a quantic of degree $n+p-2$, the highest power of x being x^n. Thus for this case also the eliminant may be written down. But also, from this particular case, a general method applicable to all cases may be evolved.

Let α, β be two quantics in x and y of degrees p and q respectively. Then the eliminant of ϕ, $\psi-\alpha\phi$, $\chi-\beta\phi$ must be identical with the eliminant of ϕ, ψ, χ. For the intersections of $\psi-\alpha\phi$, $\chi-\beta\phi$, with ϕ are exactly those, and no others, of ψ, χ with ϕ, so that the pure eliminant of ϕ, $\psi-\alpha\phi$, $\chi-\beta\phi$ is also the pure eliminant of ϕ, ψ, χ. But α may be so determined that the highest power of x in $\psi-\alpha\phi$ may be x^n (or x^{n-1}), and β so that the highest power of y in $\chi-\beta\phi$ may be y^n (or y^{n-1}), the simplest way of obtaining the result being to divide ψ by ϕ, arranged in descending powers of x, and χ by ϕ, arranged in descending powers of y, and to take the remainders.

4. The constituents of the determinant found in this way can be obtained, and the result is a form of the eliminant analogous to Bezout's determinant for the eliminant of equations in two variables.

Cayley* noticed that the constituents of Bezout's determinant were the coefficients of the expansion of $(\phi(x)\,\psi(a)-\psi(x)\,\phi(a))/(x-a)$; a

* Salmon, *Higher Algebra*, p. 83, § 87.

simple investigation of this is given in my paper just published by the Society ("A Form of the Eliminant of Two Quantics," *Proc. London Math. Soc.*, Ser. 2, Vol. 6, p. 475). I shall now consider the more complicated case of three variables in the same manner.

With a double suffix notation, let

$$\phi(x, y) = A_{00} + \Sigma A_{rs} x^r y^s,$$
$$\psi(x, y) = B_{00} + \Sigma B_{rs} x^r y^s,$$
$$\chi(x, y) = C_{00} + \Sigma C_{rs} x^r y^s.$$

Then

$$F(x, y, a, b)(x-a)(y-b)$$
$$= \begin{vmatrix} \phi(x, y), & \psi(x, y), & \chi(x, y) \\ \lambda\phi(x, b)+\mu\phi(a, y), & \lambda\psi(x, b)+\mu\psi(a, y), & \lambda\chi(x, b)+\mu\chi(a, y) \\ \phi(a, b), & \psi(a, b), & \chi(a, b) \end{vmatrix}$$
$$= \Sigma \begin{vmatrix} A_{pq}, & A_{rs}, & A_{tu} \\ B_{pq}, & B_{rs}, & B_{tu} \\ C_{pq}, & C_{rs}, & C_{tu} \end{vmatrix} \begin{vmatrix} x^p y^q, & x^r y^s, & x^t y^u \\ \lambda x^p b^q + \mu a^p y^q, & \lambda x^r b^s + \mu a^r y^s, & \lambda x^t b^u + \mu a^t y^u \\ a^p b^q, & a^r b^s, & a^t b^u \end{vmatrix},$$

so that the coefficient of any term $x^f y^g a^h b^k$ in $F(x, y, a, b)$ can be expressed as a sum of terms of the form (A_{pq}, B_{rs}, C_{tu}), where $f+h = p+r+t-1$, $g+k = q+s+u-1$. Notice that no terms will occur for which either $p = r = t$ or $q = s = u$, since the coefficient of (A_{pq}, B_{rs}, C_{tu}) vanishes identically for these cases.

5. The actual calculation of the coefficient of $x^f y^g a^h b^k$ must now be considered.

To simplify it as much as possible I take $\mu = 0$, $\lambda = 1$, so that

$$F(x, y, a, b) = (\phi(x, y), \psi(x, b), \chi(a, b))/(x-a)(y-b).$$

If, in this, we interchange x and a, y and b, we have the same result as if we put $\lambda = 0$, $\mu = -1$ in the original form of $F(x, y, a, b)$, so that no further calculation is needed for the coefficient of μ.

Also, the interchange of x and b, y and a, will change (A_{pq}, B_{rs}, C_{tu}) into (A_{qp}, B_{ut}, C_{sr}), so that the coefficient of $x^k y^h a^g b^f$ can be written down when that of $x^f y^g a^h b^k$ is found.

This I have done as follows. Replace $\phi(x, y)$ by $1/(1-\phi_1 x)(1-\phi_2 y)$, $\psi(x, y)$ by $1/(1-\psi_1 x)(1-\psi_2 y)$, $\chi(x, y)$ by $1/(1-\chi_1 x)(1-\chi_2 y)$. Then the coefficient of (A_{pq}, B_{rs}, C_{tu}) in the original $F(x, y, a, b)$ will be the

coefficient of $(\phi_1^p \phi_2^q,\ \psi_1^r \psi_2^s,\ \chi_1^t \chi_2^u)$ in the new form. We have then to expand in powers of $x,\ y,\ a,\ b$ the function

$$\frac{1}{(x-a)(y-b)} \begin{vmatrix} \frac{1}{(1-\phi_1 x)(1-\phi_2 b)}, & \frac{1}{(1-\phi_1 x)(1-\phi_2 y)}, & \frac{1}{(1-\phi_1 a)(1-\phi_2 b)} \\ \frac{1}{(1-\psi_1 x)(1-\psi_2 b)}, & \frac{1}{(1-\psi_1 x)(1-\psi_2 y)}, & \frac{1}{(1-\psi_1 a)(1-\psi_2 b)} \\ \frac{1}{(1-\chi_1 x)(1-\chi_2 b)}, & \frac{1}{(1-\chi_1 x)(1-\chi_2 y)}, & \frac{1}{(1-\chi_1 a)(1-\chi_2 b)} \end{vmatrix}.$$

But, subtracting the first column from each of the last two, this becomes —writing only the first row—

$$\left| \frac{1}{(1-\phi_1 x)(1-\phi_2 b)}, \quad \frac{\phi_2}{(1-\phi_1 x)(1-\phi_2 y)(1-\phi_2 b)}, \right.$$

$$\left. \frac{\phi_1}{(1-\phi_1 x)(1-\phi_1 a)(1-\phi_2 b)} \right|.$$

The coefficient of $y^g a^h$ in this is

$$\left| \frac{1}{(1-\phi_1 x)(1-\phi_2 b)}, \quad \frac{\phi_2^{g+1}}{(1-\phi_1 x)(1-\phi_2 b)}, \quad \frac{\phi_1^{h+1}}{(1-\phi_1 x)(1-\phi_2 b)} \right|,$$

and therefore, finally, the coefficient of

$$| \phi_1^r \phi_2^s, \quad \phi_1^{r'} \phi_2^{s'+g+1}, \quad \phi_1^{r''+h+1} \phi_2^{s''} |$$

is $$x^{r+r'+r''} b^{s+s'+s''} y^g a^h ;$$

and, conversely, the coefficient of $x^f y^g a^h b^k$ is

$$\Sigma(\phi_1^r \phi_2^s,\ \psi_1^{r'} \psi_2^{s'+g+1},\ \chi_1^{r''+h+1} \chi_2^{s'})$$

for all solutions of $r+r'+r''=f, \quad s+s'+s''=k.$

6. Now consider, in the first place, the terms which do not contain b, that is, for which k, and therefore $s,\ s',\ s''$, are all zero.

Then, if $r=h+1+\alpha,\ r'=\beta,\ r''=\gamma$ is one solution of $r+r'+r''=f$, another is $r=h+1+\gamma,\ r'=\beta,\ r''=\alpha$, and the determinants corresponding to these two solutions will cancel one another, so that it is unnecessary to consider values of r greater than h.

Thus giving r in succession all the values from zero to h, the values of r' and r'' can be at once written down, and the coefficient of $x^f y^g a^h$ has been found.

From this we may write down the coefficient of $b^f a^g y^h$ by changing $(A_{pq},\ B_{rs},\ C_{tu})$ into $(A_{qp},\ B_{ut},\ C_{sr})$, as I have already said.

Further, representing each determinant $(\phi_1^r \phi_2^s,\ \psi_1^{r'} \psi_2^{s'+g+1},\ \chi_1^{r''+h+1} \chi_2^{s''})$ by

$F(x, y, a, b) \equiv (\phi(x, y), \psi(x, b), \chi(a, b))/(x-a)(y-b)$.

		x	y	x^2	xy	y^2	x^3
	00.10.01	00.10.11 00.20.01	00.10.02	00.10.21 00.20.11 00.30.01	00.10.12 00.20.02	00.10.03	00.20.21 00.30.11
a	00.20.01	10.20.01 00.30.01 00.20.11	00.20.02	00.20.21 10.30.01 10.20.11 00.30.11	10.20.02 00.20.12 00.30.02	00.20.03	00.30.21 10.30.11 10.20.21
b	00.11.01 00.10.02	01.10.11 00.10.12 00.21.01 00.20.02	00.10.03 00.11.02 01.10.02	00.30.02 00.20.12 01.10.21 01.20.11	00.20.03 00.21.02 00.11.12 01.20.02 01.10.12	01.10.03 00.11.03	00.30.12 20.21.01 30.11.01
a^2	00.30.01	10.30.01 00.30.11	00.30.02	20.30.01 00.30.21 10.30.11	10.30.02 00.30.12	00.30.03	20.30.11 10.30.21
ab	00.21.01 00.20.02	00.30.02 00.20.12 00.21.11 10.20.02 10.21.01	01.20.02 00.20.03 00.21.02	00.30.12 10.30.02 10.20.12 10.21.11 20.21.01	00.30.03 00.21.12 10.20.03 10.21.02 01.30.02 01.20.12 11.20.02	01.20.03 00.21.03	10.30.12 20.21.11 30.21.01
b^2	00.12.01 00.11.02 00.10.03	00.20.03 00.21.02 01.10.12 02.10.11	00.12.02 01.10.03 01.11.02 00.11.03	00.30.03 01.20.12 02.10.21 02.20.11	00.21.03 01.20.03 01.21.02 01.11.12 02.10.12	02.10.03 00.12.03 01.11.03	01.30.12 02.30.11 02.20.21
ϕ	A_{00}	A_{10}	A_{01}	A_{20}	A_{11}	A_{02}	A_{30}
ψ	B_{00}	B_{10}	B_{01}	B_{20}	B_{11}	B_{02}	B_{30}
χ	C_{00}	C_{10}	C_{01}	C_{20}	C_{11}	C_{02}	C_{30}
$x\phi$		A_{00}		A_{10}	A_{01}		A_{20}
$x\psi$		B_{00}		B_{10}	B_{01}		B_{20}
$x\chi$		C_{00}		C_{10}	C_{01}		C_{20}
$y\phi$			A_{00}		A_{10}	A_{01}	
$y\psi$			B_{00}		B_{10}	B_{01}	
$y\chi$			C_{00}		C_{10}	C_{01}	
		x	y	x^2	xy	y^2	x^3

The eliminant of three ternary cubics $A_{00}+\Sigma A_{rs}x^r y^s$, $B_{00}+\Sigma B_{rs}x^r y^s$, $C_{00}+\Sigma C_{rs}x^r y^s$, the expanded forms of which are given in the seventh, eighth, and ninth rows of the table. The symbol 00.10.01 is used for the determinant

$$\begin{vmatrix} A_{00} & A_{10} & A_{01} \\ B_{00} & B_{10} & B_{01} \\ C_{00} & C_{10} & C_{01} \end{vmatrix},$$

x^2y	xy^2	y^3	x^4	x^3y	x^2y^2	xy^3	y^4	
00.20.12 00.30.02	00.20.03		00.30.21	00.30.12	00.30.03			
10.30.02 10.20.12 00.30.12	10.20.03 00.30.03		10.30.21	10.30.12	10.30.03			a
00.30.03 00.21.12 01.30.02 01.20.12	00.21.03 01.20.03		01.30.21	01.30.12	01.30.03			b
20.30.02 10.30.12	10.30.03		20.30.21	20.30.12	20.30.03			a^2
10.30.03 10.21.12 01.30.12 11.30.02 11.20.12	01.30.03 10.21.03 11.20.03		11.30.21	11.30.12	11.30.03			ab
01.30.03 02.20.12	02.20.03 01.21.03		02.30.21	02.30.12	02.30.03			b^2
A_{21}	A_{12}	A_{03}						ϕ
B_{21}	B_{12}	B_{03}						ψ
C_{21}	C_{12}	C_{03}						χ
A_{11}	A_{02}		A_{30}	A_{21}	A_{12}	A_{03}		$x\phi$
B_{11}	B_{02}		B_{30}	B_{21}	B_{12}	B_{03}		$x\psi$
C_{11}	C_{02}		C_{30}	C_{21}	C_{12}	C_{03}		$x\chi$
A_{20}	A_{11}	A_{02}		A_{30}	A_{21}	A_{12}	A_{03}	$y\phi$
B_{20}	B_{11}	B_{02}		B_{30}	B_{21}	B_{12}	B_{03}	$y\psi$
C_{20}	C_{11}	C_{02}		C_{30}	C_{21}	C_{12}	C_{03}	$y\chi$
x^2y	xy^2	y^3	x^4	x^3y	x^2y^2	xy^3	y^4	

$F(x, y, a, b) = (\phi(x, y), \psi(x, y), \chi(a, b))(x-a)(y-b).$

and the determinants denoted by the symbols in any one compartment of the table are to be added together to give the corresponding constituent of the eliminant determinant.

the corresponding product $\phi_1^r\psi_1^{r'}\chi_1^{r''+h+1}\phi_2^s\psi_2^{s'+g+1}\chi_2^{s''}$ we may write down H_f the sum of homogeneous products of ϕ_1, ψ_1, χ_1 of degree f, and H'_k that of ϕ_2, ψ_2, χ_2 of degree k, and multiply by $\chi_1^{h+1}\psi_2^{g+1}$, and then in $H_fH'_k\chi_1^{h+1}\psi_2^{g+1}$ we must, since the products are merely representatives of determinants, strike out any term which is symmetrical in two of the letters ϕ, ψ, χ or any set of terms which together are symmetrical.

Since $\psi_2^{g+1}H'_k$ is symmetrical in ϕ_2 and χ_2, we may first calculate $H_f\chi_1^{h+1}$, and strike out of this any set of terms symmetrical with respect to ϕ_1 and χ_1, and then multiply by $\psi_2^{g+1}H'_k$; in the latter expression, however, we may only strike out terms symmetrical in all three ϕ_2, ψ_2, χ_2.

Thus dividing $H_f\chi_1^{h+1}$ into two parts $P+Q$, where Q contains the terms symmetrical with respect to ϕ_1 and χ_1; and, similarly, $H'_k\psi_2^{g+1}$ into $R+S$, where S contains the terms symmetrical with respect to ϕ_2 and ψ_2, we want $(P+Q)(R+S)$, which is reduced to $PR+PS$. Now P and R are already known from the coefficients of x^fa^h and b^ky^g, so that it is, in fact, only necessary to find S—viz., the terms in $H'_k\psi_2^{g+1}$ which are symmetrical with respect to ϕ_2 and ψ_2. If $k < g+1$, there will be no such terms. This being done, $PR+PS$ may be written down and then reduced by the cancelling of symmetrical terms or sets of terms.

7. I have calculated in this way the eliminant of three cubics as a determinant of order fifteen; the result is given on pp. 56, 57. The same table may be used to give the eliminant for three quadratics or for two cubics and a quadratic—in fact, for any three quantics when the degree is not greater than three. Thus for three quadratics we take the first six columns, under 0, x, y, x^2, xy, y^2, and the first, second, third, seventh, eighth, and ninth rows, striking out in these any term in which the sum of the suffixes is 3; the determinant of the sixth order formed from these rows and columns is the eliminant of three quadratics.

In the determinant of order fifteen $[2n^2-n]$, we may, if we please, make the block of the first six $[\frac{1}{2}n(n+1)]$ rows and columns symmetrical by taking $\lambda = 1$, $\mu = -1$ in $F(x, y, a, b)$, which, as far as this block is concerned, means replacing any constituent a_{rs} by $\frac{1}{2}(a_{rs}+a_{sr})$. If we were to take $\lambda = \mu = 1$, the block would be skew symmetrical, and the whole determinant must vanish identically, which is a curious result. This may be tested easily by taking three cubics in which the only terms which occur are x^3, y^3, z^3.

8. There is a remark of very general application which should be made here. In most, if not all, of the cases considered, in which the eliminant appears as a determinant some of whose constituents are

of the third degree in the coefficients, and some of the first, it is possible to get a result of a slightly different form.

Taking the simplest case, § 2, with the notation there used, it is possible to take

$$\xi = \tfrac{1}{2}n(n-1), \qquad \eta = \tfrac{1}{2}n(n+1),$$

which give

$$\xi+\eta = n^2, \qquad \xi+3\eta = 2n^2+n,$$

and thus to form an eliminant from $\frac{1}{2}n(n-1)$ equations derived from F, and $\frac{3}{2}n(n+1)$ equations got by multiplying ϕ, ψ, χ by the terms of a quantic of degree $n-1$.

9. I now go on to the discussion of the eliminant of three quantics of degree $n+m$, in which the highest powers of x and y respectively are x^n and y^m, each quantic being of the form

$$\Sigma A_{rs}x^r y^s \quad (r = 0, 1, 2, \ldots, n\,;\ s = 0, 1, 2, \ldots, m).$$

In this investigation infinite values of either x or y are not to be considered, so that the degree of the eliminant in the coefficients of any one of the three quantics will be $2mn$ (in general, if the degrees of ϕ, ψ, χ in x and y are m_1, n_1; m_2, n_2; m_3, n_3 respectively, the degree of the eliminant in the coefficients of ϕ will be $m_2n_3+m_3n_2$).

In the language of geometry, each of the curves $\phi = 0$, $\psi = 0$, $\chi = 0$, of degree $m+n$, has a multiple point of order m at the point $x = 0$, $z = 0$, and another of order n at the point $y = 0$, $z = 0$, and the vanishing of the eliminant is the condition that they should have another common point, besides these points on $z = 0$ which account for m^2+n^2 intersections.

10. *First Method.*

Having given the three quantics

$$\phi(x, y) = \Sigma A_{rs}x^r y^s, \qquad \psi(x, y) = \Sigma B_{rs}x^r y^s, \qquad \chi(x, y) = \Sigma C_{rs}x^r y^s$$
$$(r = 0, 1, 2, 3, \ldots, n\,;\ s = 0, 1, 2, 3, \ldots, m),$$

consider, as before,

$$F(x, y, a, b) \equiv (\phi(x, y),\ \psi(x, b),\ \chi(a, b))/(x-a)(y-b).$$

In this case F is of degree $2n-1$ in x, $m-1$ in y, $n-1$ in a, $2m-1$ in b, so that, equating to zero the coefficient of $a^r b^s$, for all values of r and s, $F = 0$ is equivalent to $2mn$ equations in x and y, and the number of terms in these equations is also $2mn$. Thus the eliminant can be at once written down as a determinant of order $2mn$, each constituent of

which is the sum of determinants of the third order of the type (A_{pq}, B_{rs}, C_{tu}).

It may be noticed that we get the same result if we take the complementary form of F, viz.,

$$(\phi(x, y),\ \psi(a, y),\ \chi(a, b))/(x-a)(y-b),$$

since this will give the same determinant when rows and columns are interchanged.

I give here the eliminant formed by this method of three quantics, each of the second degree in x and y separately,

$$\Sigma A_{rs}x^r y^s, \quad \Sigma B_{rs}x^r y^s, \quad \Sigma C_{rs}x^r y^s \quad (r = 0, 1, 2;\ s = 0, 1, 2).$$

The symbols are to be interpreted as on pp. 56, 57.

		y	x	xy	x^2	x^2y	x^3	x^3y	
	00.10.01	00.10.02	00.10.11 00.20.01	00.10.12 00.20.02	00.10.21 00.20.11	00.10.22 00.20.12	00.20.21	00.20.22	
a	00.20.01	00.20.02	00.20.11 10.20.01	00.20.12 10.20.02	00.20.21 10.20.11	00.20.22 10.20.12	10.20.21	10.20.22	a
b	00.11.01 00.10.02	00.11.02 01.10.02	00.10.12 00.21.01 00.20.02 01.10.11	00.11.12 00.21.02 01.10.12 01.20.02	00.10.22 00.20.12 01.10.21 01.20.11	00.11.22 00.21.12 01.10.22 01.20.12	00.20.22 01.20.21	00.21.22 01.20.22	b
ab	00.21.01 00.20.02	00.21.02 01.20.02	00.21.11 00.20.12 10.21.01 10.20.02	00.21.12 10.21.02 01.20.12 11.20.02	00.20.22 10.20.12 10.21.11 01.20.21	00.21.22 10.21.12 01.20.22 11.20.12	10.20.22 11.20.21	10.21.22 11.20.22	ab
b^2	00.12.01 00.11.02	00.12.02 01.11.02	00.22.01 00.21.02 10.12.01 10.11.02	00.22.02 01.21.02 01.11.12 10.12.02	01.20.12 01.10.22 02.20.11 02.10.21	02.10.22 02.20.12 01.11.22 01.21.12	02.20.21 01.20.22	01.21.22 02.20.22	b^2
ab^2	00.22.01 00.21.02	00.22.02 01.21.02	00.22.11 00.21.12 10.22.01 10.21.02	00.22.12 01.21.12 10.22.02 11.21.02	10.22.11 10.21.12 20.22.01 20.21.02	10.22.12 01.21.22 11.21.12 02.20.22	12.20.21 11.20.22	12.20.22 22.11.21	ab^2
b^3	00.12.02	01.12.02	00.22.02 10.12.02	01.22.02 11.12.02	20.12.02 10.22.02	21.12.02 11.22.02	02.20.22	02.21.22	b^3
ab^3	00.22.02	01.22.02	00.22.12 10.22.02	01.22.12 11.22.02	10.22.12 20.22.02	21.22.02 22.12.11	20.22.12	12.21.22	ab^3

11. *Second Method.*

The eliminant may also be written as a determinant of order $3mn$, each constituent being of order 2 in the coefficients of ϕ, ψ, χ.

For consider the function

$$[\phi, \psi] = \begin{vmatrix} \phi(x, y), & \psi(x, y) \\ \phi(x, b), & \psi(x, b) \end{vmatrix} \Big/ (y-b).$$

This is of degree $2n$ in x, $m-1$ in y and b; and therefore represents m equations of degree $2n$ in x, $m-1$ in y. If we multiply each by $1, x, x^2, \ldots, x^{n-1}$, we have mn equations, the number of terms in which is $3mn$. We may, in the same way, get $2mn$ other equations, by forming the functions $[\psi, \chi]$ and $[\phi, \chi]$ and the eliminant is at once obtained.

A combination of these two methods will give the eliminant in all cases where ϕ, ψ, χ are of the same degree in one of the variables.

For, if ϕ, ψ, χ are of degree m in y, and of degrees $n, n+p, n+r$, respectively in x,

F is of degree $m-1$ in y and b, $2n+p+r-1$ in x,

$[\phi, \psi]$,, $m-1$ in y and b, $2n+p$ in x,

$[\phi, \chi]$,, $m-1$ in y and b, $2n+r$ in x.

Multiply $[\phi, \psi]$ by $1, x, \ldots, x^{r-1}$, $[\phi, \chi]$ by $1, x, \ldots, x^{p-1}$, and we have $rm+pm$ equations, add to these the $2mn$ equations derived from F by taking the coefficients of $a^k b^l$ ($k < 2n$, $l < m$), and we have $m(2n+p+r)$ equations from which we can write down a determinant. Also the degree of the determinant in the coefficients of ϕ is

$$2mn+rm+pm \quad \text{or} \quad m(n+p)+m(n+r),$$

which is right, and in those of ψ, χ is $mn+m(n+r)$, $mn+m(n+p)$, respectively.

12. *Third Method.*

A third form of the eliminant may be obtained by multiplying each equation $\phi = 0$, $\psi = 0$, $\chi = 0$, by the terms of a quantic of degree $2n-1$ in x and $m-1$ in y. We shall in this way get from ϕ, $2mn$ equations of degree $3n-1$ in x, and $2m-1$ in y, that is to say, $2mn$ equations of $6mn$ terms, and from these and the corresponding equations formed from ψ and χ we may eliminate "dialytically," and thus obtain a determinant of order $6mn$, each constituent of which is a coefficient in ϕ, ψ, or χ.

Thus, for example, the condition that the three hyperbolas

$$a_1xy+b_1x+c_1y+d_1 = 0,$$
$$a_2xy+b_2x+c_2y+d_2 = 0,$$
$$a_3xy+b_3x+c_3y+d_3 = 0,$$

should have another common point besides the two at infinity, may be written

$$\begin{vmatrix} d_1c_1b_1a_1 & \\ d_2c_2b_2a_2 & \\ d_3c_3b_3a_3 & \\ & d_1c_1b_1a_1 \\ & d_2c_2b_2a_2 \\ & d_3c_3b_3a_3 \end{vmatrix} = 0.$$

The eliminant of the same equations formed by the second method would be

$$\begin{matrix} (a_1b_2), & (a_1d_2)+(c_1b_2), & (c_1d_2) \\ (a_2b_3), & (a_2d_3)+(c_2b_3), & (c_2d_3) \\ (a_3b_1), & (a_3d_1)+(c_3b_1), & (c_3d_1) \end{matrix} .$$

Formed by the first method it would be

$$\begin{vmatrix} (c_1b_2a_3), & (c_1d_2a_3) \\ (a_1d_2b_3), & (c_1d_2b_3) \end{vmatrix} .$$

This method also may be extended to all cases where ϕ, ψ, χ are of the same degree m in y. For, if the degrees in x are n_1, n_2, n_3 respectively, we may multiply ϕ by the terms of a quantic of degree n_2+n_3-1 in x, and $m-1$ in y, ψ by those of one of degree n_3+n_1-1 in x, and $m-1$ in y, χ by those of one of degree n_1+n_2-1 in x, and $m-1$ in y; thus obtaining $2m(n_1+n_2+n_3)$ equations in the same number of terms.

13. *Fourth Method.*

There is yet a fourth method, which is of importance in that it can be extended so as to give the eliminant in some cases when the highest powers of x and y in ϕ, ψ, χ are not the same for all the quantics. Take $F(x, y, a, b)$ in its more general form

$$(\phi(x, y),\ \lambda\psi(x, b)+\mu\psi(a, y),\ \chi(a, b))/(x-a)(y-b),$$

in which we may take λ to be a function of y of the m-th degree, and μ a function of x of the n-th degree.

This will be of degree $2n-1$ in x, and $2m-1$ in y. Then, if we take mn equations derived from it, viz., the coefficients of a^rb^s for $r<n$, $s<m$, these will have $4mn$ terms when expanded in x, y. To these we add $3mn$ other equations formed by multiplying ϕ, ψ, χ by the mn terms of a quantic of degree $n-1$ in x, and $m-1$ in y. The deter-

minants, of order $4mn$, formed from these $4mn$ equations will then be the eliminant, as it contains the coefficients of each of ϕ, ψ, χ to the order $2mn$.

Instead of the function F we may use the function

$$(\phi(x, y),\ \psi(x, b),\ \chi(a, y)) / (x-a)(y-b),$$

from which mn equations may be derived.

14. An interesting corollary to this is that the square of the eliminant of any three quantics, all of the n-th degree, may be written in any of the four forms just considered.

For, if we make the (1, 2) substitution

$$x = xz, \qquad y = yz, \qquad z = xy + cz^2,$$

where c is an arbitrary constant, the eliminant of the transformed equations will be the square of the eliminant of the original equations, since to a common point of two (or three) original curves will correspond two common points of two (or three) transformed curves. But this substitution transforms a quantic of degree n into one of degree $2n$, in which x^n, y^n are the highest powers of x and y which occur, that is, into one of the form just considered when $m = n$.

15. I will now show, just as in § 3, how far this fourth method is applicable to quantics in which the indices of the highest powers of x and y are not the same in all three.

Let the highest powers of x and y in ϕ be $x^n y^m$,

" " " ψ be $x^{n+p} y^{m+q}$,

" " " χ be $x^{n+r} y^{m+s}$,

so that ϕ is of the lowest degree in both x and y. Then, if, as before, ξ, η_1, η_2, η_3 are the numbers of equations derived from $F(x, y, a, b)$, ϕ, ψ, χ respectively, I must have

$$\xi + \eta_1 = (n+p)(m+s) + (n+r)(m+q),$$
$$\xi + \eta_2 = n(m+s) + m(n+r),$$
$$\xi + \eta_3 = n(m+q) + m(n+p).$$

Taking then $\xi = mn$, I have

$$\eta_1 = (n+p+r)(m+q+s) - pq - rs,$$
$$\eta_2 = (n+r)(m+s) - rs,$$
$$\eta_3 = (n+p)(m+q) - pq.$$

Also the equations derived from $F(x, y, a, b)$ will be of degree $2n+p+r-1$ in x and $2m+q+s-1$ in y, so that the number of terms is $(2n+p+r)(2m+q+s)$, which is equal to $\xi+\eta_1+\eta_2+\eta_3+pq+rs$. Thus the method is at once applicable to equations for which either $p=0$, $r=0$ or $s=0$, $q=0$, that is, for three quantics in which the highest power of one of the variables is the same in all three, it being unnecessary, after what has gone before, to give the details of the process.

Or, again, we may take $p=0$, $s=0$ or $q=0$, $r=0$, so that, if the highest power of one variable is the same in ϕ and ψ, and the highest power of the other variable the same in ϕ and χ, the method is still applicable.

If only one of p, q, r, s is zero, say $q=0$, so that ϕ and ψ are both of the m-th degree in y, we may replace χ by $\chi-\beta\phi$, where β, a quantic of degree r in x and s in y, is determined so that no term $x^k y^l$ shall occur in $\chi-\beta\phi$ in which both $k>n$ and $l>m$ ($\chi-\beta\phi$ being obtained as a remainder after simple division). This being done, the effective number of terms in F, and the equations derived from it, will be reduced by rs, since no terms will occur in which, at the same time, the index of x is greater than $2n+p$ and the index of y greater than $2m$, and we have again the proper number of equations.

The other case for consideration is when

the highest powers of x and y in ϕ are $x^n y^{m+q}$,

" " " " " " ψ are $x^{n+p} y^m$,

" " " " " " χ are $x^{n+r} y^{m+s}$.

in this case, taking $\xi = mn$, we have

$$\eta_1 = (m+s)(n+p+r)-rs,$$

$$\eta_2 = (m+q+s)(n+r)-rs,$$

$$\eta_3 = (m+q)(n+p),$$

$$\xi+\eta_1+\eta_2+\eta_3 = (2n+p+r)(2m+q+s)-rs\,;$$

so that if either r or s is zero, the eliminant can be found.

Taking all these cases together, the eliminant can be found by this method whenever two of the quantics are of the same degree in either of the variables, whilst the third is of higher degree.

In other cases the eliminant can be found as a quotient. If ϕ' be of degree n in x and ψ of degree $n+p$, put $\phi = (x-a)^p \phi'$. Then the eliminant of ϕ', ψ, χ is the quotient of the eliminant of ϕ, ψ, χ by the eliminant of $\psi(a, y)$ and $\chi(a, y)$, raised to the power p.

16. I have found a curious result, not directly connected with the development of the theory of this paper, which seems worthy of notice.

If $\phi = 0$ is a curve of degree n with a multiple point of order $n-1$, say at the point $y = 0$, $z = 0$, $\psi = 0$ a curve of order m with a multiple point of order $m-1$ at $x = 0$, $z = 0$, $\chi = 0$ a curve of order p with a multiple point of order $p-1$ at $x = 0$, $y = 0$, then the eliminant can be at once written down by Sylvester's dialytic method as a determinant of order $mn+np+pm$.

Multiply ϕ by the terms which occur in the general equation of a curve of degree $m+p-2$, which has a multiple point of order $m-1$ at $x = 0$, $z = 0$, and another of order $p-1$ at $x = 0$, $y = 0$.

The number of these terms is

$$\tfrac{1}{2}(m+p)(m+p-1)-\tfrac{1}{2}m(m-1)-\tfrac{1}{2}p(p-1),$$

that is, mp. Also all the terms of the equations obtained in this way from the three quantics ϕ, ψ, χ are included in the terms of the general equation of a curve of order $m+n+p-2$, with three multiple points at $y = 0$, $z = 0$; $x = 0$, $z = 0$; $x = 0$, $y = 0$ of orders $n-1$, $m-1$, $p-1$ respectively, the number of these terms being $mn+np+pm$. Thus a determinant of order $mn+np+pm$ can be written down.

As an example, the condition that three conics

$$\begin{aligned}
\phi &\equiv \quad b_1y^2+c_1z^2+f_1yz+g_1xz+h_1xy = 0,\\
\psi &\equiv a_2x^2 \quad +c_2z^2+f_2yz+g_2xz+h_2xy = 0,\\
\chi &\equiv a_3x^2+b_3y^2 \quad +f_3yz+g_3xz+h_3xy = 0
\end{aligned}$$

should have a common point is given by the vanishing of the determinant,

	x^3y	x^3z	y^3x	y^3z	z^3x	z^3y	x^2y^2	x^2z^2	y^2z^2	x^2yz	y^2xz	z^2xy
$x^2\phi$	h_1	g_1					b_1	c_1		f_1		
$y^2\psi$			h_2	f_2			a_2		c_2		g_2	
$z^2\chi$					g_3	f_3		a_3	b_3			h_3
$yz\phi$				b_1		c_1			f_1		h_1	g_1
$yz\psi$						c_2			f_2	a_2	h_2	g_2
$yz\chi$				b_3					f_3	a_3	h_3	g_3
$xz\phi$					c_1			g_1		h_1	b_1	f_1
$xz\psi$		a_2			c_2			g_2		h_2		f_2
$xz\chi$		a_3						g_3		h_3	b_3	f_3
$xy\phi$			b_1				h_1			g_1	f_1	c_1
$xy\psi$	a_2						h_2			g_2	f_2	c_2
$xy\chi$	a_3		b_3				h_3			g_3	f_3	

17. All these investigations of the expression of eliminants as determinants may be adapted so as to give determinants whose constituents contain sets of arbitrary parameters, the results being analogous to those given for equations in a single variable in my paper already quoted (*Proc. London Math. Soc.*, Ser. 2, Vol. 6, pp. 468–478).

I will give two examples, (i.), (ii.), corresponding to the results of § 10 and § 2 of this paper.

(i.) If (a_r, b_r) and (α_r, β_r) are two sets of $2mn$ points such that the (a, b) points do not all lie on a curve of the form

$$\Sigma\lambda_{rs}x^r y^s = 0 \quad (r = 0, 1, 2, \ldots, 2n-1,\ s = 0, 1, 2, \ldots, m-1)$$

nor the (α, β) points on a curve of the form

$$\Sigma\mu_{rs}x^r y^s = 0 \quad (r = 0, 1, 2, \ldots, n-1,\ s = 0, 1, 2, \ldots, 2m-1),$$

but otherwise arbitrary, the eliminant of

$$\phi(x, y) = \Sigma A_{rs}x^r y^s, \qquad \psi(x, y) = \Sigma B_{rs}x^r y^s, \qquad \chi(x, y) = \Sigma C_{rs}x^r y^s$$
$$(r = 0, 1, 2, \ldots, n,\ s = 0, 1, 2, \ldots, m)$$

may be written as a determinant of order $2mn$ whose constituents are

$$F(a_r, b_r, \alpha_s, \beta_s) = (\phi(a_r, b_r), \psi(a_r, \beta_s), \chi(\alpha_s, \beta_s))/(a_r-\alpha_s)(b_r-\beta_s),$$

a_r, b_r being the same for each row, and α_s, β_s the same for each column.

(ii.) If (a_r, b_r) is a set of $\frac{1}{2}n(n+1)$ points which do not all lie on a curve of degree $n-1$, and (α_r, β_r) a set which do not all lie on a curve of degree $2n-1$, the eliminant of three equations $\phi = 0$, $\psi = 0$, $\chi = 0$ all of degree n, may be written as a determinant of order $2n^2-n$, which has $\frac{1}{2}n(n+1)$ rows whose constituents are

$$F(a_r, b_r, \alpha_s, \beta_s) = (\phi(a_r, b_r), \lambda\psi(a_r, \beta_s)+\mu\psi(\alpha_s, b_r), \chi(\alpha_s, \beta_s))/(a_r-\alpha_s)(b_r-\beta_s),$$

$\frac{1}{2}n(n-1)$ rows whose constituents are $\theta_r(\alpha_s, \beta_s)\,\phi(\alpha_s, \beta_s)$, where $\theta_r(x, y)$ represents $\frac{1}{2}n(n-1)$ arbitrary functions of degree $n-2$, and the same number of rows whose constituents are

$$\theta_r(\alpha_s, \beta_s)\,\psi(\alpha_s, \beta_s), \qquad \theta_r(\alpha_s, \beta_s)\,\chi(\alpha_s, \beta_s),$$

a_r, b_r, θ_r being the same for each row, and α_s, β_s the same for each column.

18. These results may be verified by the method of my former paper (§ 7, p. 475).

Taking (i.), suppose E the determinant found in § 10, D the determinant order of $2mn$ whose rows are

$$|\ 1,\ a_r,\ b_r,\ a_r^2,\ \ldots,\ a_r^{2n-1}b_r^{m-1}\ |,$$

the constituents being the terms of $\Sigma\lambda_{rs}x^r y^s$ ($r = 0, 1, 2, \ldots, 2n-1$, $s = 0, 1, 2, \ldots, m-1$), and D' the similar determinant

$$| 1, \alpha_s, \beta_s, \alpha^2, \ldots, \alpha_s^{n-1}\beta_s^{2m-1} |.$$

Then, if we multiply E successively by D and D', we see that the determinant of (i.) is equal to EDD'.

19. The determinants in the form now considered may also be found directly by the help of the following simple theorem.

Let $\omega(x, y) = 0$ be the general equation of a curve determined by $M-1$ points, so that the left-hand side when expanded contains M terms —in the most usual case ω is a curve of the n-th degree determined by $\frac{1}{2}n(n+3)$ points and having $\frac{1}{2}(n+1)(n+2)$ terms—and take M sets of points (a_r, b_r) which do not all lie on any curve ω.

Let $\omega_r(x, y) = 0$ be the equation of the curve determined by passing through all the M points except a_r, b_r. Then, if $\phi(x, y) = 0$ be a particular curve of the family ω, we have the identity

$$\phi(x, y) = \Sigma \frac{\omega_r(x, y)}{\omega_r(a_r, b_r)} \phi(a_r, b_r),$$

analogous to the formula of partial fractions for functions of one variable.

A simple way of obtaining this result is to write down the expansions of $\phi(x, y)$, $\phi(a_r, b_r)$, and to eliminate the coefficients of ϕ; the result, which is the vanishing of a certain determinant, is then easily reduced to the above form, the denominators $\omega_r(a_r, b_r)$ being essentially identical for all values of r.

By the help of this, the required results can be written down at once. For example, taking $\omega(x, y)$ in the appropriate form, we have, for (i.),

$$F(a_r, b_r, x, y) = \sum_s F(a_r, b_r, a_s, \beta_s)\, \omega_s(x, y) / \omega_s(a_s, \beta_s),$$

where s has $2mn$ values, and, by giving $2mn$ values to r, we may eliminate linearly the $2mn$ quantities $\omega_s(x, y)/\omega_s(a_s, \beta_s)$, on the supposition that x, y is the common solution of $\phi = 0$, $\psi = 0$, $\chi = 0$, which we know satisfies $F(a, b, x, y) = 0$.

20. The restriction on the freedom of choice for (a_r, b_r) and (a_r, β_r) will explain the difficulties experienced if we try to deduce from these results, the corresponding results when the degrees in x and y are not the same in all three quantics (cf. § 8, p. 476, of my former paper). For instance, taking (ii.), we may deduce from this eliminant of quantics of

degrees n, n, n, that of quantics of degrees n, n, $n-1$. For, take $\chi = (x-a)\chi'$. Then the result already obtained must be divided by the eliminant of $\phi(a, y)$ and $\psi(a, y)$, in order to get the eliminant of ϕ, ψ, χ'. But, putting $a_r = a$ for $r = 1, 2, \ldots, n$, and also $\lambda = 1$, $\mu = 0$, it will be found that the eliminant of $\phi(a, y)$ and $\psi(a, y)$ can be divided out from the first n rows, leaving these rows with constituents of the form

$$(b_r - \beta_s)^{n-1} \chi'(a_s, \beta_s).$$

Now this will be all right, since if out of $\frac{1}{2}n(n+1)$ points we have n on a straight line, the remaining $\frac{1}{2}n(n-1)$ are one more than is enough to determine a curve of degree $n-2$, which, together with the straight line, would make up a curve of degree $n-1$. But, if we put two sets of n points on two straight lines, or $2n$ points on a conic, a curve of order $n-3$ can be drawn through the remaining $\frac{1}{2}n(n-3)$ points, and so the process cannot be continued any further without modifications.

21. The general form of the eliminant which has just been found can obviously be specialised in a great number of ways. For example, in (ii.), we may take $\frac{1}{2}n(n-1)$ of the (a, β) points, and choose the $\frac{1}{2}n(n-1)$ arbitrary functions $\theta(x, y)$ (of degree $n-2$), so that each θ curve shall pass through all but one of this set of (a, β) points. Then a block of $[\frac{1}{2}n(n-1]^2$ constituents of the determinant will consist of a principal diagonal only, $\theta_r(a_s, \beta_s)\phi(a_s, \beta_s)$, all the other terms vanishing, and the same thing is true of the constituents $\theta\psi$, $\theta\chi$.

22. Some of the methods of this paper are applicable to the problem of elimination when the number of variables is greater than two.

Thus, if we have four quantics $\phi(x, y, z)$, ... of degree n in x, m in y, p in z, we write down the determinant of the fourth order whose first row is

$$| \phi(x, y, z), \quad \phi(a, y, z), \quad \phi(a, b, z), \quad \phi(a, b, c) | .$$

This is divisible by $(x-a)(y-b)(z-c)$, and the quotient is of degree $n-1$ in x, $2m-1$ in y, $3p-1$ in z, $3n-1$ in a, $2m-1$ in b, $p-1$ in c, and thus when equated to zero is equivalent to $6mnp$ equations in $6mnp$ terms, so that the eliminant can be written down, as a determinant of order $6mnp$ each of whose constituents is of the first degree in the coefficients of each quantic.

Or, again, we may get a determinant of order $8mnp$ by using the functions

$$(\phi(x, y, z), \quad \psi(x, b, z), \quad \chi(x, b, c)) / (y-b)(z-c),$$

where ϕ, ψ, χ are three of the given quantics. For this, when multiplied by $1, x, \ldots, x^{n-1}$, will give $n \times 2mp$ equations in $8mnp$ terms. (Cf. § 11.)

It is not difficult to find other results analogous to those of §§ 11, 12, for quantics of this form

$$\Sigma A_{rst} x^r y^s z^t \quad (r \leqslant n,\ s \leqslant m,\ t \leqslant p);$$

but I have not succeeded in getting any result for the eliminant of four quantics of the ordinary standard type—that is, in geometrical language, for the condition that four surfaces of degree n should have a common point.

It would seem to follow from this, that we may obtain results entirely analogous to those of Bezout and Sylvester for the algebraical eliminant of quantics in any number of variables, $x, y, z, \ldots$, when the highest term of each quantic is $Ax^n y^m z^p \ldots$, where $x^n, y^m, z^p, \ldots$ are respectively the highest powers of $x, y, z, \ldots$ which occur; I say, "algebraical eliminant," because the analogy is algebraical and not geometrical, infinite values of the variables being left out of consideration.

THE CONFORMAL TRANSFORMATIONS OF A SPACE OF FOUR DIMENSIONS AND THEIR APPLICATIONS TO GEOMETRICAL OPTICS

By H. BATEMAN.

[Received October 9th, 1908.—Read November 12th, 1908.]

CONTENTS.

§ 1. Introduction.
§ 2. The Conformal Transformations of a Space of Four Dimensions.
§ 3. The Relation between Riemann's general Hypergeometric Function and the Conformal Transformations of a Space of Four Dimensions.
§ 4. Applications to Geometrical Optics.
§ 5. Applications of the preceding results to a Symmetrical Optical Instrument.

1. The method of inversion which was first applied to problems in electrostatics by Lord Kelvin,* and which forms the basis of his theory of electric images, has also been applied with success in other branches of mathematical physics, as, for instance, in hydrodynamics. In geometrical optics, however, the method has been seldom used, probably because the necessary developments are not to be found in books on geometrical optics. The object of this paper is to show that the method can be of real value in both geometrical and physical optics. It is found that the transformation which is really needed is an inversion in a space of four dimensions, the transition to three-dimensional space being made by replacing the fourth coordinate by ict, where t is the time and c the velocity of light.

The first part of the paper is devoted to the general conformal transformation of a space of four dimensions. Shortly after Lord Kelvin's discovery of the method of transforming electrostatical problems by means of inversion,† Liouville‡ obtained the most general transformation that can be used for three-dimensional problems in this way.

* In a letter to Liouville dated October 8th, 1845. Liouville's *Journal de Mathématiques* 1845).

† The method of inversion had been used in geometry some time before. It apparently originated with Ptolemy. Quetelet used it in 1827 and Bellavatis gave a general statement of it in 1836. In 1843–4 it was propounded afresh by Ingram and Stubbs (*Transactions of the Dublin Philosophical Society*, Vol. I., pp. 58, 145, 159; *Philosophical Magazine*, Vol. XXIII., p. 338, Vol. XXV., p. 208).

‡ *Journal de Mathématiques* (1845); T. XV. (1850), p. 103.

The group of tranformations of this kind is known as the group of conformal transformations of space,* it preserves the angles between two surfaces and changes a sphere into either a sphere or a plane.†

The property, however, upon which the applications to electrostatical problems depends is that the transformations enable us to pass from one solution of the equation

$$\frac{\partial^2 V}{\partial x^2} + \frac{\partial^2 V}{\partial y^2} + \frac{\partial^2 V}{\partial z^2} = 0$$

to another.‡

Now the group of conformal transformations in a space of four dimensions possesses the analogous property in connection with the two differential equations

$$\frac{\partial^2 V}{\partial x^2} + \frac{\partial^2 V}{\partial y^2} + \frac{\partial^2 V}{\partial z^2} = \frac{1}{c^2}\frac{\partial^2 V}{\partial t^2},$$

$$\left(\frac{\partial V}{\partial x}\right)^2 + \left(\frac{\partial V}{\partial y}\right)^2 + \left(\frac{\partial V}{\partial z}\right)^2 = \frac{1}{c^2}\left(\frac{\partial V}{\partial t}\right)^2,$$

which are fundamental in the wave theory of light.

This has been known for some time,§ but the analysis given in § 2 will be useful in indicating the procedure to be adopted to obtain the relation connecting the two solutions for any transformation of the group.

In § 3 a particular solution of the first of the above equations is

---

* A simple method of obtaining the group of conformal transformations is given in Bianchi's *Vorlesungen über Differential Geometrie*, Leipzig (1899), p. 487. Another investigation is given in Maxwell's *Collected Papers*, Vol. II., p. 297, where reference is made to a paper by J. N. Haton de Goupillière, *Journal de l'Ecole Polytechnique*, T. XXV., p. 188 (1867). See also a paper by Bromwich, *Proc. London Math. Soc.*, Vol. XXXIII., p. 185, and three papers by Tait, *Collected Papers*, Vol. I., pp. 176, 352, Vol. II., p. 329.

† The effect of combining the elementary transformations of the group is discussed by Darboux, *Une Classe remarquable de courbes et de surfaces algébriques*, Paris (1896), pp. 236-241. It is shown that any number of successive inversions can be replaced by a single inversion followed by a displacement. It follows from this that any conformal transformation of the group can be replaced by successive inversions with regard to suitably chosen spheres, Cf. *Math. Tripos*, Part I. (1903).

‡ In this connection see a paper by Forsyth, *Proceedings of the London Mathematical Society*, Vol. XXIX. (1898), p. 165. The tranformations which can be applied to the equation

$$\left(\frac{\partial V}{\partial x}\right)^2 + \left(\frac{\partial V}{\partial y}\right)^2 + \left(\frac{\partial V}{\partial z}\right)^2 = 0$$

are derived by J. E. Campbell, *Messenger of Mathematics*, Vol. XXVIII. (1898), p. 97.

§ Liouville's theorem was extended by Lie to a space of n dimensions in 1871. *Math. Ann.*, Vol. V., p. 145; *Göttinger Nachrichten*, May, 1871. I cannot, however, find any statement with regard to the first of the two equations.

expressed in terms of Riemann's general hypergeometric function, and new light is thrown upon the theory of the transformations of the hypergeometric equation into itself.

In § 4 the applications to geometrical optics are considered. When applied to a symmetrical optical instrument, the transformation reduces to a homographic transformation of the points on the axis.

2. *The Conformal Transformations of a Space of Four Dimensions.*

The study of the conformal transformations of a space of four dimensions is simplified by the introduction of the six homogeneous coordinates* :

$$\left.\begin{aligned} l &= x-iy, \quad m = z+iw, \quad n = x^2+y^2+z^2+w^2 \\ \lambda &= x+iy, \quad \mu = z-iw, \quad \nu = -1 \end{aligned}\right\} \tag{1}$$

connected by the identical relation

$$l\lambda+m\mu+n\nu = 0. \tag{2}$$

A function $F(x, y, z, w)$ can be expressed by means of them as a homogeneous function of arbitrary degree. For instance, we may write

$$V = F(x, y, z, w) = F\left(-\frac{l+\lambda}{2\nu}, -\frac{l-\lambda}{2i\nu}, -\frac{m+\mu}{2\nu}, -\frac{m-\mu}{2i\nu}\right),$$

$$U = f(x, y, z, w) = -\frac{1}{\nu} f\left(-\frac{l+\lambda}{2\nu}, -\frac{l-\lambda}{2i\nu}, -\frac{m+\mu}{2\nu}, -\frac{m-\mu}{2i\nu}\right).$$

In the first representation V is a homogeneous function of degree zero, and in the second U is a homogeneous function of degree -1. The coordinate n may be introduced into the representations by means of the identical relation (2), the homogeneity of the expression being thereby unaltered.

Conversely, any homogeneous function of the six variables (l, m, n, λ, μ, ν) can be expressed as a function of (x, y, z, w). We shall now consider under what circumstances such a function can satisfy one of the differential equations—

$$\left(\frac{\partial V}{\partial x}\right)^2+\left(\frac{\partial V}{\partial y}\right)^2+\left(\frac{\partial V}{\partial z}\right)^2+\left(\frac{\partial V}{\partial w}\right)^2 = 0,$$

$$\frac{\partial^2 U}{\partial x^2}+\frac{\partial^2 U}{\partial y^2}+\frac{\partial^2 U}{\partial z^2}+\frac{\partial^2 U}{\partial w^2} = 0.$$

* These bear the same relation to the hexaspherical coordinates of a point as the ordinary line coordinates of a line bear to the system of coordinates introduced by Klein.

First, let V be a homogeneous function of degree zero. We evidently have

$$\frac{\partial V}{\partial x} = \frac{\partial V}{\partial l} + \frac{\partial V}{\partial \lambda} + 2x\frac{\partial V}{\partial n},$$

$$\frac{\partial V}{\partial y} = i\frac{\partial V}{\partial l} - i\frac{\partial V}{\partial \lambda} + 2y\frac{\partial V}{\partial n},$$

$$\frac{\partial V}{\partial z} = \frac{\partial V}{\partial m} + \frac{\partial V}{\partial \mu} + 2z\frac{\partial V}{\partial n},$$

$$\frac{\partial V}{\partial w} = i\frac{\partial V}{\partial m} - i\frac{\partial V}{\partial \mu} + 2w\frac{\partial V}{\partial n},$$

$$\left(\frac{\partial V}{\partial x}\right)^2 + \left(\frac{\partial V}{\partial y}\right)^2 + \left(\frac{\partial V}{\partial z}\right)^2 + \left(\frac{\partial V}{\partial w}\right)^2$$

$$= 4\frac{\partial V}{\partial l}\frac{\partial V}{\partial \lambda} + 4\frac{\partial V}{\partial m}\frac{\partial V}{\partial \mu} + 4n\left(\frac{\partial V}{\partial n}\right)^2 + 4l\frac{\partial V}{\partial l}\frac{\partial V}{\partial n}$$

$$+ 4\lambda\frac{\partial V}{\partial \lambda}\frac{\partial V}{\partial n} + 4\mu\frac{\partial V}{\partial \mu}\frac{\partial V}{\partial n} + 4m\frac{\partial V}{\partial m}\frac{\partial V}{\partial n}.$$

But, since V is a homogeneous function of degree zero,

$$l\frac{\partial V}{\partial l} + \lambda\frac{\partial V}{\partial \lambda} + m\frac{\partial V}{\partial m} + \mu\frac{\partial V}{\partial \mu} + n\frac{\partial V}{\partial n} + \nu\frac{\partial V}{\partial \nu} = 0,$$

and $\nu = -1$, therefore

$$\left(\frac{\partial V}{\partial x}\right)^2 + \left(\frac{\partial V}{\partial y}\right)^2 + \left(\frac{\partial V}{\partial z}\right)^2 + \left(\frac{\partial V}{\partial w}\right)^2 \equiv 4\left[\frac{\partial V}{\partial l}\frac{\partial V}{\partial \lambda} + \frac{\partial V}{\partial m}\frac{\partial V}{\partial \mu} + \frac{\partial V}{\partial n}\frac{\partial V}{\partial \nu}\right].$$

If, instead of $(l, m, n, \lambda, \mu, \nu)$, we use the usual hexaspherical coordinates defined by the relations

$$a_1 = x, \quad a_2 = y, \quad a_3 = z, \quad a_4 = w, \quad a_5 = \frac{r^2-1}{2}, \quad a_6 = \frac{r^2+1}{2i};$$

$$l = a_1 + ia_2, \qquad m = a_3 + ia_4, \qquad n = a_5 + ia_6;$$

$$\lambda = a_1 - ia_2, \qquad \mu = a_3 - ia_4, \qquad \nu = a_5 - ia_6,$$

the equation takes the more symmetrical form

$$\left(\frac{\partial V}{\partial x}\right)^2 + \left(\frac{\partial V}{\partial y}\right)^2 + \left(\frac{\partial V}{\partial z}\right)^2 + \left(\frac{\partial V}{\partial w}\right)^2 \equiv \sum_{k=1}^{6}\left(\frac{\partial V}{\partial a_k}\right)^2.$$

This relation shows that a homogeneous function of degree zero, which is a solution of

$$\frac{\partial V}{\partial l}\frac{\partial V}{\partial \lambda} + \frac{\partial V}{\partial m}\frac{\partial V}{\partial \mu} + \frac{\partial V}{\partial n}\frac{\partial V}{\partial \nu} = 0,$$

i.e., of

$$\sum_{k=1}^{6}\left(\frac{\partial V}{\partial a_k}\right)^2 = 0$$

is a solution of $$\left(\frac{\partial V}{\partial x}\right)^2+\left(\frac{\partial V}{\partial y}\right)^2+\left(\frac{\partial V}{\partial z}\right)^2+\left(\frac{\partial V}{\partial w}\right)^2=0$$

when expressed in terms of x, y, z, w.

Next, let U be a homogeneous function of degree -1 in $(l, m, n, \lambda, \mu, \nu)$, then we can show in a similar way that

$$\frac{\partial^2 U}{\partial x^2}+\frac{\partial^2 U}{\partial y^2}+\frac{\partial^2 U}{\partial z^2}+\frac{\partial^2 U}{\partial w^2}\equiv 4\left[\frac{\partial^2 U}{\partial l\,\partial\lambda}+\frac{\partial^2 U}{\partial m\,\partial\mu}+\frac{\partial^2 U}{\partial n\,\partial\nu}\right]\equiv\sum_{k=1}^{6}\frac{\partial^2 U}{\partial a^2}.$$

Hence, if U is a solution of

$$\frac{\partial^2 U}{\partial l\,\partial\lambda}+\frac{\partial^2 U}{\partial m\,\partial\mu}+\frac{\partial^2 U}{\partial n\,\partial\nu}=0,$$

i.e., of $$\sum_{k=1}^{6}\frac{\partial^2 U}{\partial a_k^2}=0,$$

it is a solution of $$\frac{\partial^2 U}{\partial x^2}+\frac{\partial^2 U}{\partial y^2}+\frac{\partial^2 U}{\partial z^2}+\frac{\partial^2 U}{\partial w^2}=0$$

when expressed in terms of (x, y, z, w).

When $(a_1, a_2, \ldots, a_6)$ are interpreted as the coordinates of a point in a space of six dimensions, the expressions

$$\sum_{k=1}^{6}a_k^2,\qquad \sum_{k=1}^{6}\left(\frac{\partial U}{\partial a_k}\right)^2,\qquad \sum_{k=1}^{6}\frac{\partial^2 U}{\partial a_k^2}$$

remain unaltered in form after any change of rectangular axes in which the origin remains the same. Any change of this kind corresponds to a transformation in the (x, y, z, w) space, enabling us to pass from one solution of the equation

$$\frac{\partial^2 U}{\partial x^2}+\frac{\partial^2 U}{\partial y^2}+\frac{\partial^2 U}{\partial z^2}+\frac{\partial^2 U}{\partial w^2}=0$$

to another, and a similar remark applies to the equation

$$\left(\frac{\partial V}{\partial x}\right)^2+\left(\frac{\partial V}{\partial y}\right)^2+\left(\frac{\partial V}{\partial z}\right)^2+\left(\frac{\partial V}{\partial w}\right)^2=0.$$

To illustrate the method of formation of the transformation, we may consider the effect of simply interchanging n and $-\nu$. The functions V and U of formulæ (3) and (4) then transform into

$$F\left(\frac{l+\lambda}{2n},\ \frac{l-\lambda}{2in},\ \frac{m+\mu}{2n},\ \frac{m-\mu}{2in}\right)=F\left(\frac{x}{r^2},\ \frac{y}{r^2},\ \frac{z}{r^2},\ \frac{w}{r^2}\right)$$

and $$\frac{1}{n}f\left(\frac{l+\lambda}{2n},\ \frac{l-\lambda}{2in},\ \frac{m+\mu}{2n},\ \frac{m-\mu}{2in}\right)=\frac{1}{r^2}f\left(\frac{x}{r^2},\ \frac{y}{r^2},\ \frac{z}{r^2},\ \frac{w}{r^2}\right)$$

respectively, r^2 being written in place of $x^2+y^2+z^2+w^2$.

Accordingly, from a solution $V = F(x, y, z, w)$ of the equation

$$\left(\frac{\partial V}{\partial x}\right)^2 + \left(\frac{\partial V}{\partial y}\right)^2 + \left(\frac{\partial V}{\partial z}\right)^2 + \left(\frac{\partial V}{\partial w}\right)^2 = 0,$$

we may derive a second solution

$$v = F\left(\frac{x}{r^2}, \frac{y}{r^2}, \frac{z}{r^2}, \frac{w}{r^2}\right),$$

and from the solution $U = f(x, y, z, w)$ of

$$\frac{\partial^2 U}{\partial x^2} + \frac{\partial^2 U}{\partial y^2} + \frac{\partial^2 U}{\partial z^2} + \frac{\partial^2 U}{\partial w^2} = 0,$$

we may derive another solution

$$u = \frac{1}{r^2} f\left(\frac{x}{r^2}, \frac{y}{r^2}, \frac{z}{r^2}, \frac{w}{r^2}\right).$$

Putting $w = ict$, where c is the velocity of light and t is the time, the equations take the well known form*

$$\left(\frac{\partial V}{\partial x}\right)^2 + \left(\frac{\partial V}{\partial y}\right)^2 + \left(\frac{\partial V}{\partial z}\right)^2 = \frac{1}{c^2}\left(\frac{\partial V}{\partial t}\right)^2,$$

$$\frac{\partial^2 V}{\partial x^2} + \frac{\partial^2 V}{\partial y^2} + \frac{\partial^2 V}{\partial z^2} = \frac{1}{c^2}\frac{\partial^2 V}{\partial t^2},$$

and the transformation may be written

$$X = \frac{x}{r^2 - c^2t^2}, \qquad Y = \frac{y}{r^2 - c^2t^2}, \qquad Z = \frac{z}{r^2 - c^2t^2}, \qquad T = \frac{t}{r^2 - c^2t^2},$$

where now $$r^2 = x^2 + y^2 + z^2.$$

The study of this transformation will be taken up later.

* It may be mentioned here that Lorentz's fundamental equations of the electron theory, viz.,

$$\frac{\partial \gamma}{\partial y} - \frac{\partial \beta}{\partial z} = 4\pi u, \qquad \frac{\partial Q}{\partial z} - \frac{\partial R}{\partial y} = \frac{\partial \alpha}{\partial t},$$

$$u = \frac{\partial f}{\partial t} + \rho\xi, \qquad P = 4\pi c^2 f,$$

$$\frac{\partial \rho}{\partial t} + \frac{\partial}{\partial x}(\rho\xi) + \frac{\partial}{\partial y}(\rho\eta) + \frac{\partial}{\partial z}(\rho\zeta) = 0,$$

$$\frac{\partial f}{\partial x} + \frac{\partial g}{\partial y} + \frac{\partial h}{\partial z} = \rho, \qquad \frac{\partial \alpha}{\partial x} + \frac{\partial \beta}{\partial y} + \frac{\partial \gamma}{\partial z} = 0,$$

may be reduced to a symmetrical form by writing $s = ict$ and putting

$$\alpha + i\frac{P}{c} = p, \qquad \beta + i\frac{Q}{c} = q, \qquad \gamma + i\frac{R}{c} = r.$$

The four mutually orthogonal vectors (A, B, C, D) whose components are respectively

$$(0, r, -q, -p), \quad (-r, 0, p, -q), \quad (q, -p, 0, -r), \quad (p, q, r, 0)$$

A second transformation of some interest is obtained by interchanging m with n and μ with ν. This changes

$$-\frac{1}{\nu}\,f\left(-\frac{l+\lambda}{2\nu},\ -\frac{l-\lambda}{2i\nu},\ -\frac{m+\mu}{2\nu},\ -\frac{m-\mu}{2i\nu}\right)$$

into

$$-\frac{1}{\mu}\,f\left(-\frac{l+\lambda}{2\mu},\ -\frac{l-\lambda}{2i\mu},\ -\frac{n+\nu}{2\mu},\ -\frac{n-\nu}{2i\mu}\right),$$

that is

$$f(x,\ y,\ z,\ w)$$

into

$$-\frac{1}{z-iw}\,f\left(-\frac{x}{2(z-iw)},\ -\frac{y}{2(z-iw)},\ -\frac{1-r^2}{2(z-iw)},\ -\frac{1+r^2}{2i(z-iw)}\right).$$

Putting $w = ict$ and changing the sign of z, the formulæ for the transformation are

$$X = \frac{x}{z-ct},\qquad Y = \frac{y}{z-ct},\qquad Z = \frac{r^2-1}{2(z-ct)},\qquad cT = \frac{r^2+1}{2(z-ct)},$$

where, now,

$$r^2 = x^2+y^2+z^2-c^2t^2.$$

If $V = F(x, y, z, t)$ is a solution of

$$\left(\frac{\partial V}{\partial x}\right)^2+\left(\frac{\partial V}{\partial y}\right)^2+\left(\frac{\partial V}{\partial z}\right)^2 = \frac{1}{c^2}\left(\frac{\partial V}{\partial t}\right)^2,$$

the function $F(X, Y, Z, T)$ is also a solution, and, if $U = f(x, y, z, t)$ is

---

satisfy the equations

$$\operatorname{div} A = 4\pi\rho\xi,\quad \operatorname{div} B = 4\pi\rho\eta,\quad \operatorname{div} C = 4\pi\rho\zeta,\quad \operatorname{div} D = 4\pi\rho ic,$$

where

$$\operatorname{div} M \equiv \frac{\partial M_1}{\partial x}+\frac{\partial M_2}{\partial y}+\frac{\partial M_3}{\partial z}+\frac{\partial M_4}{\partial s}\quad\text{if}\quad M \equiv (M_1,\ M_2,\ M_3,\ M_4).$$

Again, if we put $4\pi\rho\xi = X,\ 4\pi\rho\eta = Y,\ 4\pi\rho\eta = Z,\ 4\pi\rho ic = S,$

and introduce four new vectors A_1, B_1, C_1, D_1 whose components are respectively

$$(S, -Z, Y, -X)\quad (Z, S, -X, -Y)\quad (-Y, X, S, -Z)\quad (X, Y, Z, S),$$

we find

$$\operatorname{div} A_1 = \nabla^2 p,\quad \operatorname{div} B_1 = \nabla^2 q,\quad \operatorname{div} C_1 = \nabla^2 r,\quad \operatorname{div} D_1 = 0,$$

where

$$\nabla^2\phi \equiv \frac{\partial^2\phi}{\partial x^2}+\frac{\partial^2\phi}{\partial y^2}+\frac{\partial^2\phi}{\partial z^2}+\frac{\partial^2\phi}{\partial s^2}.$$

Finally, if X, Y, Z, S can be derived from a potential function n so that

$$X = -\frac{\partial n}{\partial x},\qquad Y = -\frac{\partial n}{\partial y},\qquad Z = -\frac{\partial n}{\partial z},\qquad S = -\frac{\partial n}{\partial s},$$

we can form four mutually orthogonal vectors θ, ϕ, ψ, χ whose components are respectively

$$(n, r, -q, -p),\quad (-r, n, p, -q),\quad (q, -p, n, -r),\quad (p, q, r, n),$$

and the equations then take the simple form

$$\operatorname{div}\theta = \operatorname{div}\phi = \operatorname{div}\psi = \operatorname{div}\chi = 0,$$

$$\nabla^2 p = \nabla^2 q = \nabla^2 r = \nabla^2 n = 0,$$

$$\operatorname{div} A_1 = \operatorname{div} B_1 = \operatorname{div} C_1 = \operatorname{div} D_1 = 0.$$

a solution of $$\frac{\partial^2 U}{\partial x^2}+\frac{\partial^2 U}{\partial y^2}+\frac{\partial^2 U}{\partial z^2}=\frac{1}{c^2}\frac{\partial^2 U}{\partial t^2},$$

the function $$\frac{1}{z-ct}f\left[\frac{x}{z-ct},\ \frac{y}{z-ct},\ \frac{r^2-1}{2(z-ct)},\ \frac{r^2+1}{2c(z-ct)}\right]$$

is also a solution.

In following up the connection between different solutions, it is convenient to use polar coordinates. Putting

$$x=r\cos\theta\cos\phi,\qquad y=r\cos\theta\sin\phi,\qquad z=r\sin\theta\cos\psi,$$
$$w=ict=r\sin\theta\sin\psi;$$
$$X=R\cos\Theta\cos\Phi,\quad Y=R\cos\Theta\sin\Phi,\quad Z=R\sin\Theta\cos\Psi,$$
$$W=icT=R\sin\Theta\sin\Psi:$$

we obtain the relations

$$r^2=-e^{-2i\Psi},\qquad R^2=-e^{-2i\psi},\qquad \sin\Theta=\operatorname{cosec}\theta,\qquad \Phi=\phi.$$

There is a similar transformation for Laplace's equation.*

If $$X=\frac{r^2-a^2}{2(x-iy)},\qquad Y=\frac{r^2+a^2}{2i(x-iy)},\qquad Z=\frac{az}{x-iy},$$

a solution $f(x, y, z)$ corresponds to a second solution

$$\frac{1}{\sqrt{x-iy}}f\left(\frac{r^2-a^2}{2(x-iy)},\ \frac{r^2+a^2}{2i(x-iy)},\ \frac{az}{x-iy}\right).$$

Putting $x=r\sin\theta\cos\phi,\qquad y=r\sin\theta\sin\phi,\qquad z=r\cos\theta,$

$$X=R\sin\Theta\cos\Phi,\quad Y=R\sin\Theta\sin\Phi,\quad Z=R\cos\Theta,$$

the formulæ of transformation become

$$R=iae^{i\phi},\qquad r=iae^{i\Phi},\qquad \sin\Theta=\operatorname{cosec}\theta.$$

The transition from one solution of Laplace's equation to another is now easily effected.

The effects of combining the different transformations belonging to a group of conformal transformations is most easily studied by interpreting

* This transformation was given by the author in a Smith's Prize Essay of 1905; it was deduced from a result given by Brill, *Messenger of Mathematics* (1891), pp. 135–137. If $V=f(x_1, \ldots, x, t)$ is a solution of the differential equation

$$\frac{\partial^2 V}{\partial x_1^2}+\frac{\partial^2 V}{\partial x_2^2}+\ldots+\frac{\partial^2 V}{\partial x_n^2}=\frac{1}{a}\frac{\partial V}{\partial t},$$

another solution is given by

$$t^{-\frac{1}{2}n}e^{-(x_1^2+x_2^2+\ldots+x_n^2)/4at}f\left(\frac{x_1}{t},\ \frac{x_2}{t},\ \ldots,\ \frac{x_n}{t},\ -\frac{1}{t}\right).$$

the transformation as a change of axes in a space in which the coordinates are the spherical coordinates α_r.* It is important to notice that the angle between two manifolds in this space is equal to the angle between the corresponding manifolds in the space to which the conformal transformations are applied. In the case of a space of four dimensions, we have, in fact,

$$da_1^2+da_2^2+da_3^2+da_4^2+da_5^2+da_6^2 \equiv dx^2+dy^2+dz^2+dw^2,$$

$$da_1 da_1'+da_2 da_2'+da_3 da_3'+da_4 da_4'+da_5 da_5'+da_6 da_6'$$
$$\equiv dx\,dx'+dy\,dy'+dz\,dz'+dw\,dw',$$

from which the result easily follows.

A change in the sign of α_6 corresponds to an inversion, a change in the sign of α_6 coupled with a change in the sign of α_4 corresponds to the other transformation we have mentioned. It is evident that each of these transformations is of period 2. In general, a reflexion in a linear manifold in the α space corresponds to an inversion with regard to the corresponding circle, sphere, or hypersphere, in the space of four dimensions. A displacement of period n in the α space may be obtained by taking successive reflexions in two plane five-folds which cut at an angle π/n.† It evidently corresponds to a periodic conformal transformation made up of inversions with regard to two hyperspheres which cut at an angle π/n.

3. *The Relation between Riemann's General Hypergeometric Function and the Group of Conformal Transformations of a Space of Four Dimensions.*

We shall now endeavour to satisfy the differential equation

$$\frac{\partial^2 U}{\partial l\,\partial\lambda}+\frac{\partial^2 U}{\partial m\,\partial\mu}+\frac{\partial^2 U}{\partial n\,\partial\nu}=0,$$

by means of a function of the form

$$U = l^{-\alpha}\lambda^{-\alpha'}m^{-\beta}\mu^{-\beta'}n^{-\gamma}\nu^{-\gamma'}P, \qquad (1)$$

* Reference should be made to Darboux, *Théorie des Surfaces*, Tome I., p. 213. Jessop's *Treatise on the Line Complex*, p. 251. Koenig's *La Géometrie réglée*, p. 125, and to an article by Borel on the "Transformations of Geometry in Niewenglowsky's Solid Geometry."

† This is equivalent to a rotation through an angle $2\pi/n$ just as successive reflexions in two planes are equivalent to a rotation about their line of intersection.

where P is a function of the ratio of any two of the quantities $l\lambda$, $m\mu$, $n\nu$. The quantity U will then be a solution of the equation

$$\frac{\partial^2 U}{\partial x^2}+\frac{\partial^2 U}{\partial y^2}+\frac{\partial^2 U}{\partial z^2}=\frac{1}{c^2}\frac{\partial^2 U}{\partial t^2}.$$

if the relation $$\alpha+\alpha'+\beta+\beta'+\gamma+\gamma'=1$$

is satisfied, for it will then be a homogeneous function of degree -1 in $(l, m, n, \lambda, \mu, \nu)$.

Let us put
$$l\lambda = (b-c)(z-a) = \xi,$$
$$m\mu = (c-a)(z-b) = \eta,$$
$$n\nu = (a-b)(z-c) = \zeta,$$

where a, b and c are arbitrary constants. The relation

$$l\lambda+m\mu+n\nu = 0$$

is then satisfied, and P becomes a function of z alone. We may thus write

$$P(\xi, \eta, \zeta) \equiv P(z) \equiv H(\xi^{b-c}\eta^{c-a}\zeta^{a-b}) \equiv H(\theta),$$

the particular functional form in terms of ξ, η, ζ being chosen to facilitate the calculations. H is clearly a homogeneous function of degree zero in ξ, η, ζ, and therefore in l, m, n, λ, μ, ν.

On differentiating equation (1), we obtain

$$\frac{\partial U}{\partial l}=-\frac{a}{l}U+\lambda\frac{U}{P}\frac{\partial P}{\partial \xi},$$

$$\frac{\partial^2 U}{\partial l\partial\lambda}=\frac{a\alpha'}{\xi}U+\frac{1-a-\alpha'}{P}U\frac{\partial P}{\partial \xi}+\frac{\xi}{P}U\frac{\partial^2 P}{\partial \xi^2}.$$

The differential equation

$$\frac{\partial^2 U}{\partial l\partial\lambda}+\frac{\partial^2 U}{\partial m\partial\mu}+\frac{\partial^2 U}{\partial n\partial\nu}=0$$

will thus be satisfied, if

$$\xi\frac{\partial^2 P}{\partial \xi^2}+\eta\frac{\partial^2 P}{\partial \eta^2}+\zeta\frac{\partial^2 P}{\partial \zeta^2}+(1-a-\alpha')\frac{\partial P}{\partial \xi}+(1-\beta-\beta')\frac{\partial P}{\partial \eta}$$
$$+(1-\gamma-\gamma')\frac{\partial P}{\partial \zeta}+\left(\frac{a\alpha'}{\xi}+\frac{\beta\beta'}{\eta}+\frac{\gamma\gamma'}{\zeta}\right)P=0.$$

Now $$\frac{\partial P}{\partial \xi} = \frac{b-c}{\xi}\,\theta H'(\theta) = \frac{\theta}{z-a}\,H'(\theta),$$

$$\frac{dP}{dz} = \frac{\partial P}{\partial \xi}\frac{\partial \xi}{\partial z} + \frac{\partial P}{\partial \eta}\frac{\partial \eta}{\partial z} + \frac{\partial P}{\partial \zeta}\frac{\partial \zeta}{\partial z} = (b-c)\frac{\partial P}{\partial \xi} + (c-a)\frac{\partial P}{\partial \eta} + (a-b)\frac{\partial P}{\partial \zeta}$$

$$= \left(\frac{b-c}{z-a} + \frac{c-a}{z-b} + \frac{a-b}{z-c}\right)\theta H'(\theta)$$

$$= -\frac{(b-c)(c-a)(a-b)}{(z-a)(z-b)(z-c)}\,\theta H'(\theta).$$

Hence $$\frac{\partial P}{\partial \xi} = \frac{(z-b)(z-c)}{(a-b)(a-c)}\,\frac{1}{b-c}\,\frac{dP}{dz}.$$

Also, since $$\xi\frac{\partial P}{\partial \xi} = (b-c)\,\theta H'(\theta) = \phi(\theta),$$

we have $$\xi\frac{\partial^2 P}{\partial \xi^2} + \frac{\partial P}{\partial \xi} = \frac{\partial}{\partial \xi}\,\phi(\theta) = \frac{(z-b)(z-c)}{(a-b)(a-c)}\,\frac{1}{b-c}\,\frac{d}{dz}\,\phi(\theta),$$

this relation being obtained in the same way as the one above.

The last expression may be written

$$\frac{(z-b)(z-c)}{(a-b)(a-c)}\,\frac{d}{dz}\,\theta H'(\theta),$$

i.e., $$-\frac{(z-b)(z-c)}{(a-b)(a-c)}\,\frac{d}{dz}\,\frac{(z-a)(z-b)(z-c)}{(b-c)(c-a)(a-b)}\,\frac{dP}{dz},$$

or $$\frac{(z-a)(z-b)^2(z-c)^2}{(b-c)(c-a)^2(a-b)^2}\left[\frac{d^2P}{dz^2} + \left(\frac{1}{z-a} + \frac{1}{z-b} + \frac{1}{z-c}\right)\frac{dP}{dz}\right].$$

Now $$\frac{(z-b)(z-c)}{(c-a)(a-b)} + \frac{(z-c)(z-a)}{(a-b)(b-c)} + \frac{(z-a)(z-b)}{(b-c)(c-a)} = -1,$$

and $$\frac{\partial P}{\partial \xi} + \frac{\partial P}{\partial \eta} + \frac{\partial P}{\partial \zeta} = \left(\frac{1}{z-a} + \frac{1}{z-b} + \frac{1}{z-c}\right)\theta H'(\theta)$$

$$= -\frac{(z-a)(z-b)(z-c)}{(b-c)(c-a)(a-b)}\left(\frac{1}{z-a} + \frac{1}{z-b} + \frac{1}{z-c}\right)\frac{dP}{dz};$$

consequently,

$$\xi\frac{\partial^2 P}{\partial \xi^2} + \eta\frac{\partial^2 P}{\partial \eta^2} + \zeta\frac{\partial^2 P}{\partial \zeta^2} = -\frac{(z-a)(z-b)(z-c)}{(b-c)(c-a)(a-b)}\,\frac{d^2P}{dz^2}.$$

The differential equation thus reduces to

$$\frac{d^2P}{dz^2}+\left(\frac{1-\alpha-\alpha'}{z-a}+\frac{1-\beta-\beta'}{z-b}+\frac{1-\gamma-\gamma'}{z-c}\right)\frac{dP}{dz}$$
$$+\left[\frac{\alpha\alpha'(a-b)(a-c)}{z-a}+\frac{\beta\beta'(b-a)(b-c)}{z-b}+\frac{\gamma\gamma'(c-a)(c-b)}{z-c}\right]$$
$$\times\frac{P}{(z-a)(z-b)(z-c)}=0.$$

This is Papperitz's form* of the differential equation satisfied by Riemann's general hypergeometric function†

$$P\begin{Bmatrix} a & b & c & \\ \alpha & \beta & \gamma & z \\ \alpha' & \beta' & \gamma' & \end{Bmatrix};$$

hence we have the result that

$$U=l^{-\alpha}\lambda^{-\alpha'}m^{-\beta}\mu^{-\beta'}n^{-\gamma}\nu^{-\gamma'}P\begin{Bmatrix} a & b & c & \\ \alpha & \beta & \gamma & z \\ \alpha' & \beta' & \gamma' & \end{Bmatrix}$$

is a homogeneous function of $(l, m, n, \lambda, \mu, \nu)$ of degree -1, satisfying the equation

$$\frac{\partial^2U}{\partial l\partial\lambda}+\frac{\partial^2U}{\partial m\partial\mu}+\frac{\partial^2U}{\partial n\partial\nu}=0.$$

When expressed in terms of x, y, z and w, it will thus be a solution of the equation

$$\frac{\partial^2U}{\partial x^2}+\frac{\partial^2U}{\partial y^2}+\frac{\partial^2U}{\partial z^2}+\frac{\partial^2U}{\partial w^2}=0.$$

The various transformations‡ of the general hypergeometric function are easily obtained from this result. If we write U in the form

$$U=l^{-\alpha-\theta}\lambda^{-\alpha'-\theta}m^{-\beta-\phi}\mu^{-\beta'-\phi}n^{-\gamma-\psi}\nu^{-\gamma'-\psi}(l\lambda)^{\theta}(m\mu)^{\phi}(n\nu)^{\psi}P\begin{Bmatrix} a & b & c & \\ \alpha & \beta & \gamma & z \\ \alpha' & \beta' & \gamma' & \end{Bmatrix},$$

---

* *Mathematische Annalen*, T. XXV. (1885), p. 213.

† *Abhandlungen d. K. Gesell. d. Wissenschaften zu Göttingen*, Band VII. (1857), *Gesammelte Werke*, p. 63.

‡ See Whittaker's *Analysis*, p. 246. Forsyth's *Theory of Linear Differential Equations*, Vol. IV., p. 135.

where $$\theta+\phi+\psi=0,$$

we see that $$(z-a)^{\theta}(z-b)^{\phi}(z-c)^{\psi}P\left\{\begin{matrix} a & b & c & \\ \alpha & \beta & \gamma & z \\ \alpha' & \beta' & \gamma' & \end{matrix}\right\}$$

is a multiple of $$P\left\{\begin{matrix} a & b & c & \\ a+\theta & \beta+\phi & \gamma+\psi & z \\ a'+\theta & \beta'+\phi & \gamma'+\psi & \end{matrix}\right\}.$$

Again, if we write $$a'=\frac{Aa+B}{Ca+D}, \qquad b'=\frac{Ab+B}{Cb+D},$$

$$c'=\frac{Ac+B}{Cc+D}, \qquad z'=\frac{Az+B}{Cz+D},$$

we have

$$(b'-c')(z'-a')=\frac{(AD-BC)^2}{(Ca+D)(Cb+D)(Cc+D)(Cd+D)}(b-c)(z-a),$$

so that $$\frac{l\lambda}{(b'-c')(z'-a')}=\frac{m\mu}{(c'-a')(z'-b')}=\frac{n\nu}{(a'-b')(z'-c')},$$

This shows that P is the same function of the quantities a', b', c', z' as it is of a, b, c, z; that is

$$P\left\{\begin{matrix} a' & b' & c' & \\ \alpha & \beta & \gamma & z' \\ \alpha' & \beta' & \gamma' & \end{matrix}\right\}=P\left\{\begin{matrix} a & b & c & \\ \alpha & \beta & \gamma & z \\ \alpha' & \beta' & \gamma' & \end{matrix}\right\}.$$

Hence the general hypergeometric function is unaltered if the quantities a, b, c, z are replaced by quantities a', b', c', z' which are derived from them by the same homographic substitution.

4. *Applications to Geometrical Optics.*

Let us consider a series of waves of light traversing a homogeneous or heterogeneous medium, and let

$$V=\int \mu\, ds$$

be the reduced path from a standard orthotomic surface or wave front to the point (x, y, z). Let us suppose, moreover, that V is expressed only in

terms of the coordinates (x, y, z), and the constants of the standard wave front. Then V satisfies the differential equation*

$$\left(\frac{\partial V}{\partial x}\right)^2+\left(\frac{\partial V}{\partial y}\right)^2+\left(\frac{\partial V}{\partial z}\right)^2=\mu^2,$$

and is, in fact, the characteristic function introduced by Hamilton. If it is expressed as a function of x, y, z, and the coordinates of the initial point $x_0y_0z_0$, it is the Eikonal according to the nomenclature of Bruns.†

Since V is proportional to the time this differential equation may be replaced by

$$\left(\frac{\partial t}{\partial x}\right)^2+\left(\frac{\partial t}{\partial y}\right)^2+\left(\frac{\partial t}{\partial z}\right)^2=\frac{1}{C^2},$$

where C is the velocity of radiation at the point (x, y, z).

Now suppose that the surfaces $t =$ const. are obtained by solving an equation

$$F(x, y, z, t)=0$$

for t; then, since

$$\frac{\partial F}{\partial x}+\frac{\partial F}{\partial t}\frac{\partial t}{\partial x}=0,$$

the function F must satisfy the differential equation

$$\left(\frac{\partial F}{\partial x}\right)^2+\left(\frac{\partial F}{\partial y}\right)^2+\left(\frac{\partial F}{\partial z}\right)^2=\frac{1}{C^2}\left(\frac{\partial F}{\partial t}\right)^2.$$

Confining ourselves to the case in which C is constant, we may use the results of § 2 to obtain new solutions of this differential equation.

Let

$$X=X(x, y, z, t), \qquad Z=Z(x, y, z, t),$$

$$Y=Y(x, y, z, t), \qquad T=T(x, y, z, t)$$

be the formulæ giving a transformation which enables us to pass from one solution of the above equation to another; then

$$F(X, Y, Z, T),$$

when expressed in terms of x, y, z, t, is a second solution of the equation, and if the equation

$$F=0$$

be solved for t, the surfaces $t =$ const. will form a system of parallel wave

* See Herman's *Optics*, p. 253.

† Cf. Schwarzschild's *Untersuchungen zur Geometrischen Optik*, Göttingen Abhandlungen (2), 4.

surfaces and t considered as a function of (x, y, z) will be the characteristic function for them.

The transformation

$$X = \frac{x}{r^2 - c^2t^2}, \quad Y = \frac{y}{r^2 - c^2t^2}, \quad Z = \frac{z}{r^2 - c^2t^2}, \quad T = \frac{t}{r^2 - c^2t^2}$$

is of special importance because it makes the standard wave surface $t = 0$ in the original system correspond to a standard wave surface $t = 0$ in the new system; also, since the equations of the surfaces are

$$F(x, y, z, 0) = 0,$$

and

$$F\left(\frac{x}{r^2}, \frac{y}{r^2}, \frac{z}{r^2}, 0\right) = 0,$$

respectively, it is clear that one is the inverse of the other with regard to a unit sphere whose centre is at the origin. Our theorem tells us that if the surfaces parallel to the first are given by

$$F(x, y, z, t) = 0,$$

the surfaces parallel to the second are given by

$$F\left(\frac{x}{r^2 - c^2t^2}, \frac{y}{r^2 - c^2t^2}, \frac{z}{r^2 - c^2t^2}, \frac{t}{r^2 - c^2t^2}\right) = 0.$$

Applying this result to the family of right circular cones parallel to a given one, we may obtain the family of Dupin's cyclides parallel to a given one.

To obtain a geometrical interpretation of the transformation we describe a sphere of radius ct round the point (x, y, z) as centre. The inverse sphere is then of radius cT and its centre is at the point (XYZ).

A more general result is that the sphere

$$(x - x_0)^2 + (y - y_0)^2 + (z - z_0)^2 = c^2 (t - t_0)^2$$

corresponds in the transformation to the sphere

$$(X - X_0)^2 + (Y - Y_0)^2 + (Z - Z_0)^2 = c^2 (T - T_0)^2,$$

the centres of the two spheres being corresponding points at the times t_0, T_0 respectively.

To show that the laws of reflection and refraction remain unchanged in the transformation, we take the surface at which the light is incident as the standard one from which the time is measured. Let (x_0, y_0, z_0) be a point on this surface; then we must associate with this point the time $t_0 = 0$.

Consider a ray of light travelling from (x_0, y_0, z_0) in a direction (l, m, n) with velocity c. At time t the wave has reached a point (x, y, z) on the ray, where

$$x = x_0 + l.ct, \quad y = y_0 + m.ct, \quad z = z_0 + n.ct.$$

The corresponding point (X, Y, Z) derived from this by the transformation also travels along a straight line, for

$$\begin{aligned} X &= \frac{x_0 + lct}{(x_0+lct)^2+(y_0+mct)^2+(z_0+nct)^2-c^2t^2} \\ &= \frac{x_0}{x_0^2+y_0^2+z_0^2} + \left[\frac{ct}{(x_0+lct)^2+(y_0+mct)^2+(z_0+nct)^2-c^2t^2}\right] \\ &\qquad \times \left[l - \frac{2x_0}{x_0^2+y_0^2+z_0^2}(lx_0+my_0+nz_0)\right] \\ &= X_0 + LcT, \end{aligned}$$

where

$$T = \frac{t}{r^2-c^2t^2}.$$

The corresponding ray thus passes through the inverse point $(X_0 Y_0 Z_0)$ on the inverse surface at which it may be supposed to be incident. Its direction cosines (L, M, N) are connected with those of the former ray by means of the equations

$$L = l - \frac{2x_0}{x_0^2+y_0^2+z_0^2}(lx_0+my_0+nz_0),$$

$$M = m - \frac{2y_0}{x_0^2+y_0^2+z_0^2}(lx_0+my_0+nz_0),$$

$$N = n - \frac{2z_0}{x_0^2+y_0^2+z_0^2}(lx_0+my_0+nz_0).$$

These relations establish a correspondence between the sheafs of rays through the points (x_0, y_0, z_0), (X_0, Y_0, Z_0) respectively. This correspondence is such that the angle between two rays (l, m, n), (l', m', n') is equal to the angle between the two corresponding rays (L, M, N), (L', M', N'), for we have identically

$$LL'+MM'+NN' \equiv ll'+mm'+nn'.$$

Since the transformation enables us to derive the surfaces which are parallel to one surface from the surfaces which are parallel to the inverse surface, it is natural to expect that the above relation between the direction cosines will make the normals to the two surfaces correspond.

Now $$dX_0 = \frac{dx_0}{x_0^2+y_0^2+z_0^2} - \frac{2(x_0dx_0+y_0dy_0+z_0dz_0)\,x_0}{(x_0^2+y_0^2+z_0^2)^2};$$

hence, if (l_0, m_0, n_0) are the direction cosines of a tangent to the first surface, the direction cosines of the tangent for the corresponding displacement on the inverse surface are given by

$$L_0 = l_0 - \frac{2x_0}{x_0^2+y_0^2+z_0^2}(l_0x_0+m_0y_0+n_0z_0).$$

The tangents to the two surfaces can thus be paired with one another in the correspondence.

Now, if (l, m, n) are the direction cosines of the normal to one surface, (l_0, m_0, n_0) those of a tangent,

$$ll_0+mm_0+nn_0 = 0.$$

It follows, then, that for the corresponding ray (L, M, N)

$$LL_0+MM_0+NN_0 = 0.$$

This ray, being perpendicular to all the tangents to the inverse surface, is the normal at (X_0, Y_0, Z_0) to this surface.

Since the angles between lines remain unaltered by the transformation, it follows that if (l, m, n), (l', m', n'), (p, q, r) are the direction cosines of an incident ray, the refracted ray and the normal at a point (x_0, y_0, z_0) on a surface f, the corresponding quantities (L, M, N), (L', M', N'), (P, Q, R) are the direction cosines of an incident ray, refracted ray and the normal at the point (X_0, Y_0, Z_0) of the inverse surface F. This is also easy to verify from the analytical formulæ.

The method of inversion can thus be applied to problems in geometrical optics. A medium of refractive index μ inverts into a medium of refractive index μ, a ray through the origin corresponds to a ray through the origin, and a ray through a fixed point (x, y, z) not on the surface of separation of the two media corresponds to a ray intersecting the line joining (x, y, z) to the origin.

A spherical shell of radiation emitted by an electron whose velocity was suddenly changed at time $-t$, corresponds to a shell of radiation emitted by an electron whose velocity was suddenly changed at time $-T$.

This method of inversion promises to be of great importance in the theory of radiation. It will be noticed that the spheres of radii ct whose centres are at the points

$$x = x_0+lct, \quad y = y_0+mct, \quad z = z_0+nct,$$

all touch one another at the point (x_0, y_0, z_0) which may be regarded as a *node* of the radiation.

From a study of the nodes in the ether produced by a vibrating atom or molecule, it appears that various systems of nodes may be obtained from one another by inversions which correspond to the same frequencies of vibration. The investigation will be reserved, however, for another paper.

5. *Application of the Preceding Results to a Symmetrical Optical Instrument.*

Let QR (Fig.) be the incident ray, $Q'R$ the refracted ray, OR the normal to the spherical interface, and let C be the centre of inversion.

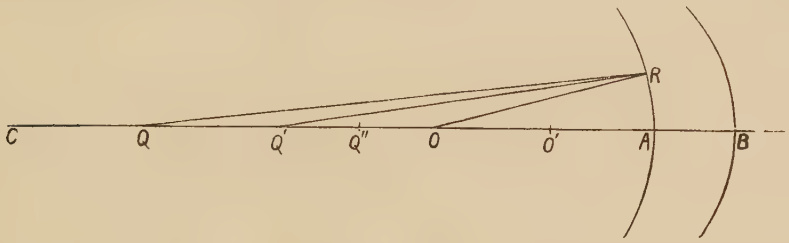

We shall suppose that the incident ray makes a small angle with the axis.

Let $\quad AC = z, \quad AO = a, \quad AQ = x, \quad AQ' = x',$

and let the velocity of light for the first medium be represented by $1/\mu$, the times corresponding to the points Q, Q', O, A respectively may then be taken to be $-\mu x$, $-\mu x'$, $-\mu a$, 0, respectively, and the corresponding quantities ct are simply the reduced distances $(-x, -x', -a, 0)$.

Let Q_1, Q_1', O_1, A_1 be the points corresponding to Q, Q', O, A in the transformation, x_1, x_1', $z_1 - a_1$, z_1 their distances from C.

Now the sphere centre Q and radius QA inverts into the sphere centre Q_1 and radius QA_1; hence, if the radius of inversion be equal to k^2, we have for the points in which these spheres meet the axis

$$z_1 = \frac{k^2}{z}, \qquad z_1 - 2x_1 = \frac{k^2}{z-2x}.$$

We also have the relations

$$A_1Q_1 = -x_1 = \frac{k^2x}{z(z-2x)},$$

$$A_1Q_1' = -x_1' = \frac{k^2x'}{z(z-2x')},$$

$$A_1O_1 = -a_1 = \frac{k^2a}{z(z-2a)}.$$

The linear magnification in the new system is

$$m_1 = \frac{\dfrac{A_1Q_1'}{\mu'}}{\dfrac{A_1Q_1}{\mu}} = \frac{\mu x'(z-2x)}{\mu' x(z-2x')} = m\,\frac{z-2x}{z-2x'}.$$

Let c be the distance of the second interface from the first; then we associate the length $-c$ with the second interface B, and the formulæ of the transformation become

$$B_1Q_1' = -\xi_1' = \frac{k^2\xi'}{(\xi'-\xi')^2-(\xi'-c)^2} = \frac{k^2\xi'}{(\xi'-c)(\xi'+c-2\xi')},$$

$$\zeta_1' = \frac{k^2\zeta}{\zeta^2-c^2}, \qquad c_1 = -\frac{k^2c}{\zeta^2-c^2},$$

$$\zeta_1'-\xi_1' = \frac{k^2(\zeta'-\xi')}{(\zeta'-\xi')^2-(\xi'-c)^2} = \frac{k^2(\zeta'-\xi')}{(\zeta'-c)(\zeta'+c-2\xi')},$$

$$\xi_1'-c_1 = \frac{k^2(c-\xi')}{(\zeta'-c)(\zeta'+c-2\xi')},$$

$$\zeta_1'+c_1-2\xi_1' = \frac{k^2}{\zeta'+c-2\xi'}.$$

The last of which may be written

$$\zeta_1'-c_1-2(\xi_1'-c_1) = \frac{k^2}{\zeta'-c-2(\xi'-c)},$$

i.e.,

$$z_1-2x_1' = \frac{k^2}{z-2x'},$$

where z and x' are measured, as before, from the first surface. This is exactly the former relation between two corresponding points; consequently the whole course of a ray in one instrument corresponds in the transformation to that of the corresponding ray in the corresponding instrument.*

---

* We can verify the equation

$$\frac{\mu''}{B_1Q_1''}-\frac{\mu'}{B_1Q_1'} = \frac{\mu''-\mu'}{B_1O_1'},$$

connecting two conjugate points in the second instrument as follows

$$\frac{1}{B_1Q_1''} = \frac{(\zeta'-c)(\zeta'+c-2\xi'')}{k^2\xi''}, \qquad \frac{1}{B_1Q_1'} = \frac{(\zeta'-c)(\zeta'+c-2\xi')}{k^2\xi'},$$

$$B_1O_1' = \frac{(\zeta'-c)(\zeta'+c-2a')}{k^2a'},$$

and

$$\frac{\mu''}{\xi''}-\frac{\mu'}{\xi'} = \frac{\mu''-\mu'}{a'},$$

since Q'' and Q' are conjugate points in the first instrument; hence the relation is satisfied.

The linear magnification is given by

$$m_1' = \frac{\frac{B_1Q_1''}{\mu''}}{\frac{B_1Q_1'}{\mu'}} = \frac{\mu'\xi''(\xi'+c-2\xi')}{\mu''\xi'(\xi'+c-2\xi'')};$$

hence

$$m_1' = m'\frac{\xi'+c-2\xi'}{\xi'+c-2\xi''} = m'\frac{z-2x'}{z-2x''},$$

which is of the same form as before.

If M and M_1 be the total linear magnifications for the two instruments, we have

$$M_1 = M\frac{z-2x}{z-2x^{(n)}}.$$

The relation between two corresponding points is evidently a homographic one; hence we have the following theorem:—

If the points on the axis of a symmetrical optical instrument be transformed by means of a homographic transformation, any pair of conjugate points for the instrument are transformed into a pair of points which are conjugate with regard to a second instrument. The centres of curvature of the interfaces and the points in which the interfaces meet the axis correspond in the two instruments, and the refractive indices of corresponding media are the same.

THE ENERGY AND MOMENTUM OF AN ELLIPSOIDAL ELECTRON

By F. B. PIDDUCK.

[Received November 2nd, 1908.—Read November 12th, 1908.]

Introduction.

IN the *Philosophical Magazine* for October, 1897, G. F. C. Searle calculated the electromagnetic energy of a charged conductor in the form of an ellipsoid of revolution when moving along its axis of figure. Except for the numerical factor $\frac{6}{5}$ this is equivalent to finding the energy of a spheroidal electron with uniform volume distribution. I propose here to extend this result by calculating the electromagnetic energy and momentum of an ellipsoidal electron with three distinct axes, the motion being in any assigned direction, and the charge being spread uniformly through its volume.

Expressions for Energy and Momentum.

Consider the case of a finite, but otherwise arbitrary, distribution of electricity moving with uniform velocity v in the direction of the axis of ξ', the current coordinates being denoted by (ξ', η, ζ). The velocity of light *in vacuo* is denoted by c, and β stands for v/c. Let E be the electric force, H the magnetic force, Φ the scalar electromagnetic potential, and ρ the density, at (ξ', η, ζ). Then it is well known* that in this case

$$E_{\xi'} = -\kappa^2 \frac{\partial \Phi}{\partial \xi'}, \quad E_\eta = -\frac{\partial \Phi}{\partial \eta}, \quad E_\zeta = -\frac{\partial \Phi}{\partial \zeta},$$

$$H_{\xi'} = 0, \quad H_\eta = \beta \frac{\partial \Phi}{\partial \zeta}, \quad H_\zeta = -\beta \frac{\partial \Phi}{\partial \eta},$$

where

$$\kappa^2 \frac{\partial^2 \Phi}{\partial \xi'^2} + \frac{\partial^2 \Phi}{\partial \eta^2} + \frac{\partial^2 \Phi}{\partial \zeta^2} = -4\pi\rho,$$

κ being written for $(1-\beta^2)^{\frac{1}{2}}$.

* See, for example, M. Abraham, *Ann. der Phys.* (Ser. 4), Bd. x. (1903), p. 139.

The calculation is simplified by applying a transformation due to Heaviside, namely, $\xi' = \kappa\xi$. The space occupied by (ξ, η, ζ) I shall call the "derived space," or in the case of an ellipsoid the "derived ellipsoid." If Ω denotes the electrostatic potential at (ξ, η, ζ) in the derived space considered as at rest, the differential equation for Φ shows that $\Phi = \Omega/\kappa$. Thus, for the field expressed in terms of (ξ, η, ζ), we have

$$E_\xi = -\frac{\partial\Omega}{\partial\xi}, \quad E_\eta = -\frac{1}{\kappa}\frac{\partial\Omega}{\partial\eta}, \quad E_\zeta = -\frac{1}{\kappa}\frac{\partial\Omega}{\partial\zeta},$$

$$H_\xi = 0, \quad H_\eta = \frac{\beta}{\kappa}\frac{\partial\Omega}{\partial\xi}, \quad H_\zeta = -\frac{\beta}{\kappa}\frac{\partial\Omega}{\partial\eta}.$$

Now, let W, G be respectively energy and momentum. The volume density of W is $\frac{1}{8\pi}$ times the sum of the squares of the resultants of E and H, while that of G is $\frac{1}{4\pi c}$ times the vector product of E and H. Moreover, the element of volume is

$$d\xi' d\eta d\zeta = \kappa d\xi d\eta d\zeta = \kappa d\tau \text{ (say)}.$$

Thus
$$W = \frac{1}{8\pi\kappa}\int\left[\kappa^2\left(\frac{\partial\Omega}{\partial\xi}\right)^2 + (1+\beta^2)\left\{\left(\frac{\partial\Omega}{\partial\eta}\right)^2 + \left(\frac{\partial\Omega}{\partial\zeta}\right)^2\right\}\right]d\tau, \tag{1}$$

and
$$\left.\begin{aligned} G_\xi &= \frac{\beta}{4\pi\kappa c}\int\left\{\left(\frac{\partial\Omega}{\partial\eta}\right)^2 + \left(\frac{\partial\Omega}{\partial\zeta}\right)^2\right\}d\tau \\ G_\eta &= -\frac{\beta}{4\pi c}\int\frac{\partial\Omega}{\partial\xi}\frac{\partial\Omega}{\partial\eta}d\tau \\ G_\zeta &= -\frac{\beta}{4\pi c}\int\frac{\partial\Omega}{\partial\xi}\frac{\partial\Omega}{\partial\zeta}d\tau \end{aligned}\right\}. \tag{2}$$

Expression of W and G in Terms of Three Integrals.

Let our moving distribution now be a uniform volume one through the ellipsoid (a', b', c'), moving along the line (l', m', n'). In the derived ellipsoid (a, b, c), let the same line be (l, m, n). Then, if we take as axes the principal axes of the derived ellipsoid, and take (l_1, m_1, n_1) and (l_2, m_2, n_2) for the axes of η and ζ in the preceding work, we have

$$\frac{\partial\Omega}{\partial\xi} = l\frac{\partial\Omega}{\partial x} + m\frac{\partial\Omega}{\partial y} + n\frac{\partial\Omega}{\partial z},$$

and two similar equations. Cross-integrals such as $\int\frac{\partial\Omega}{\partial y}\frac{\partial\Omega}{\partial z}d\tau$ go out

for reasons of symmetry, and thus if we denote

$$\left.\begin{aligned} p &= \int \left(\frac{\partial\Omega}{\partial x}\right)^2 d\tau \\ q &= \int \left(\frac{\partial\Omega}{\partial y}\right)^2 d\tau \\ r &= \int \left(\frac{\partial\Omega}{\partial z}\right)^2 d\tau \\ s &= p+q+r \\ u &= l^2p+m^2q+n^2r \end{aligned}\right\}, \tag{3}$$

we see from (1) and (2) that

$$8\pi\kappa W = (1+\beta^2)\,s-2\beta^2u,$$

$$4\pi cG_\xi = \beta\kappa^{-1}(s-u),$$

$$4\pi cG_\eta = -\beta(ll_1p+mm_1q+nn_1r),$$

$$4\pi cG_\zeta = -\beta(ll_2p+mm_2q+nn_2r).$$

Now, let Γ denote the vector $-\beta(lp,\ mq,\ nr)$. Γ_ξ has the value $-\beta u$, so that

$$4\pi cG_\xi = \beta\kappa^{-1}(s-u)+\beta u+\Gamma_\xi,$$

$$4\pi cG_\eta = \Gamma_\eta,$$

$$4\pi cG_\zeta = \Gamma_\zeta.$$

In other words, G is compounded of a vector $\frac{\beta}{4\pi\kappa c}(s-u+\kappa u)$ in the direction of motion and a vector $-\frac{\beta}{4\pi c}(lp,\ mq,\ nr)$.

Introduction of certain Auxiliary Quantities.

The evaluation of p, q, r is therefore the only remaining problem. Now, if e is the total charge on the electron, we have

$$-\frac{\partial\Omega}{\partial x} = 3eax,$$

where

$$a = \tfrac{1}{2}\int_\theta \frac{d\theta}{J(a^2+\theta)},$$

in which $$J^2 \equiv (a^2+\theta)(b^2+\theta)(c^2+\theta).$$

For an internal point $\theta = 0$, while for an external point it is the positive root of the equation

$$\frac{x^2}{a^2+\theta} + \frac{y^2}{b^2+\theta} + \frac{z^2}{c^2+\theta} = 1.$$

Now denote

$$\left.\begin{aligned} a^2+b^2+\ c^2 &= 3h^2 \\ b^2+c^2-2a^2 &= 3e_1 \\ c^2+a^2-2b^2 &= 3e_2 \\ a^2+b^2-2c^2 &= 3e_3 \end{aligned}\right\}. \tag{4}$$

Then, if we write $\phi = \theta+h^2$, we have $a^2+\theta = \phi-e_1$, ..., while

$$e_1+e_2+e_3 = 0.$$

Calling $$(\phi-e_1)(\phi-e_2)(\phi-e_3) \equiv \Delta^2,$$

we have $$a = \tfrac{1}{2}\int_\phi^\infty \frac{d\phi}{\Delta(\phi-e_1)}. \tag{5}$$

This notation is reserved for external points, for which case the lower limit is λ, where λ, μ, ν are the roots, in descending order of magnitude, of

$$\frac{x^2}{\phi-e_1} + \frac{y^2}{\phi-e_2} + \frac{z^2}{\phi-e_3} = 1.$$

The notation a_0 is kept for the internal case, so that

$$a_0 = \tfrac{1}{2}\int_{h^2}^\infty \frac{d\phi}{\Delta(\phi-e_1)}. \tag{6}$$

Evaluation of the Integrals.

Separate p into internal and external contributions p_0, p_1 respectively. Then p_0 is given at once by Dirichlet's theorem. In fact,

$$p_0 = \tfrac{12}{5}\pi e^2 a^3 bc\, a_0^2. \tag{7}$$

To evaluate p_1 change the variables from x, y, z to λ, μ, ν. It is easy to show that

$$x^2 = \frac{(\lambda-e_1)(\mu-e_1)(\nu-e_1)}{(e_1-e_2)(e_1-e_3)},$$

and $$\frac{\partial(x, y, z)}{\partial(\lambda, \mu, \nu)}$$

$$= \pm \frac{i}{8} \frac{(\mu-\nu)(\nu-\lambda)(\lambda-\mu)}{\sqrt{\{(\lambda-e_1)(\mu-e_1)(\nu-e_1)(\lambda-e_2)(\mu-e_2)(\nu-e_2)(\lambda-e_3)(\mu-e_3)(\nu-e_3)\}}}.$$

Take, for convenience, $a < b < c$, so that $e_1 > e_2 > e_3$. Then, in a single octant, μ goes from e_2 to e_1, and ν from e_3 to e_2. The limits of λ are h^2 to infinity. Hence

$$\rho_1 = \pm 9e^2 i \iiint \frac{(\mu-\nu)(\nu-\lambda)(\lambda-\mu)}{\Pi\Pi\sqrt{(\lambda-e)}} \alpha^2 \frac{(\lambda-e_1)(\mu-e_1)(\nu-e_1)}{(e_1-e_2)(e_1-e_3)} d\lambda\, d\mu\, d\nu$$

$$= \pm \frac{9e^2 i}{(e_1-e_2)(e_1-e_3)} \int_{h^2}^{\infty} \alpha^2 \left\{\frac{(\lambda-e_1)}{(\lambda-e_2)(\lambda-e_3)}\right\}^{\frac{1}{2}} K\, d\lambda, \qquad (8)$$

where

$$K \equiv \int_{e_2}^{e_1}\int_{e_3}^{e_2} (\mu-\nu)(\nu-\lambda)(\lambda-\mu) \left\{\frac{(\mu-e_1)(\nu-e_1)}{(\mu-e_2)(\nu-e_2)(\mu-e_3)(\nu-e_3)}\right\}^{\frac{1}{2}} d\mu\, d\nu,$$

or $$K = \int_{e_2}^{e_1} \frac{(\mu-\lambda)(\mu-e_1)}{\sqrt{\{(\mu-e_1)(\mu-e_2)(\mu-e_3)\}}} L\, d\mu,$$

where $$L \equiv \int_{e_3}^{e_2} \{\nu^2-\nu(\lambda+\mu)+\lambda\mu\} \frac{\nu-e_1}{\sqrt{\{(\nu-e_1)(\nu-e_2)(\nu-e_3)\}}} d\nu.$$

Substitute $\nu = \wp(z)$, where $\wp(z)$ is the Weierstrassian elliptic function formed with roots e_1, e_2, e_3. Then

$$\wp'(z) = 2\sqrt{\{(\nu-e_1)(\nu-e_2)(\nu-e_3)\}},$$

so that

$$L = 2\int_{\omega_3}^{\omega_2} \{\wp^3(z)-\wp^2(z)(e_1+\lambda+\mu)+\wp(z)(e_1\lambda+e_1\mu+\lambda\mu)-e_1\lambda\mu\}\, dz.$$

If we write $$4(\theta-e_1)(\theta-e_2)(\theta-e_3) \equiv 4\theta^3-g_2\theta-g_3,$$

we have $$\wp'^2(z) = 4\wp^3(z)-g_2\wp(z)-g_3.$$

Hence $$2\wp''(z) = 12\wp^2(z)-g_2.$$

From these it follows that

$$2\{\wp'^2(z)+\wp(z)\wp''(z)\} = 20\wp^3(z)-3g_2\wp(z)-2g_3.$$

By integration of the last two equations, we get

$$\left.\begin{aligned} 12\int \wp^2(z)\, dz &= 2\wp'(z)+g_2 z \\ 20\int \wp^3(z)\, dz &= 2\wp(z)\wp'(z)-3g_2\zeta(z)+2g_3 z \end{aligned}\right\} \qquad (9)$$

Thus $L = 2\left[\frac{1}{20}\{-3g_2(\eta_2-\eta_3)+2g_3(\omega_2-\omega_3)\}-\frac{1}{12}(e_1+\lambda+\mu)g_2(\omega_2-\omega_3)\right.$

$\left.-(e_1\lambda+e_1\mu+\lambda\mu)(\eta_2-\eta_3)-e_1\lambda\mu(\omega_2-\omega_3)\right].$

This will be written shortly

$$L = \mu(P\lambda+Q)+Q\lambda+R,$$

where

$$P = -2(\eta_2-\eta_3)-2e_1(\omega_2-\omega_3),$$

$$Q = -2e_1(\eta_2-\eta_3)-\tfrac{1}{6}g_2(\omega_2-\omega_3),$$

$$R = -\tfrac{3}{10}g_2(\eta_2-\eta_3)+(\tfrac{1}{5}g_3-\tfrac{1}{6}e_1g_2)(\omega_2-\omega_3).$$

The evaluation of K from L proceeds on exactly the same lines by means of the substitution $\mu = \wp(y)$. The same integrals require to be found, and the result is

$$K = T\lambda^2+U\lambda+V,$$

where

$$T = 2(Q-Pe_1)(\eta_1-\eta_2)+(2Qe_1-\tfrac{1}{6}Pg_2)(\omega_1-\omega_2),$$

$$U = (2R-\tfrac{3}{10}Pg_2)(\eta_1-\eta_2)+(2Re_1-\tfrac{1}{6}Pe_1g_2+\tfrac{1}{5}Pg_3)(\omega_1-\omega_2),$$

$$V = (2Re_1-\tfrac{3}{10}Qg_2)(\eta_1-\eta_2)+(\tfrac{1}{6}Rg_2-\tfrac{1}{6}Qe_1g_2+\tfrac{1}{5}Qg_3)(\omega_1-\omega_2).$$

The values of P, Q, R have already been given. Carrying out the substitutions and denoting

$$\Phi \equiv (\omega_1-\omega_2)(\eta_2-\eta_3)-(\eta_1-\eta_2)(\omega_2-\omega_3),$$

we find, after a good deal of reduction, that

$$T = -\tfrac{4}{3}(e_1-e_2)(e_1-e_3)\Phi,$$

$$U = -\tfrac{8}{15}e_1(e_1-e_2)(e_1-e_3)\Phi,$$

$$V = \tfrac{4}{15}(e_1^2-3e_2e_3)(e_1-e_2)(e_1-e_3)\Phi.$$

Now it has been shown* that

$$\Phi = \pm\tfrac{1}{2}\pi i.$$

Hence

$$K = \pm\tfrac{2}{15}\pi i(e_1-e_2)(e_1-e_3)(5\lambda^2+2\lambda e_1-e_1^2+3e_2e_3).$$

The equation (8) now shows that

$$p_1 = \pm\tfrac{6}{5}\pi e^2\int_{h^2}^{\infty}\alpha^2\left\{\frac{\lambda-e_1}{(\lambda-e_2)(\lambda-e_3)}\right\}^{\frac{1}{2}}(5\lambda^2+2\lambda e_1-e_1^2+3e_2e_3)\,d\lambda.$$

---

* Weierstrass, *Werke*, Vol. I., p. 117.

Putting $\lambda = \wp(x)$, the limits of x are ϵ and 0, where $h^2 = \wp(\epsilon)$. Thus we find

$$p_1 = \pm \tfrac{12}{5}\pi e^2 \int_0^\epsilon \alpha^2 \{\wp(x) - e_1\} \{5\wp^2(x) + 2e_1\wp(x) - e_1^2 + 3e_2e_3\}\, dx. \quad (10)$$

Here

$$\alpha = \int_x^0 \frac{dx}{\wp(x) - e_1}.$$

Since

$$\frac{1}{\wp(x) - e_1} = \frac{\wp(x+\omega_1) - e_1}{(e_1 - e_2)(e_1 - e_3)},$$

we have

$$\alpha(e_1 - e_2)(e_1 - e_3) = \zeta(x+\omega_1) + e_1 x - \eta_1.$$

By a known formula*

$$\zeta(x+\omega_1) - \zeta(x) - \eta_1 = \frac{\wp'(x)}{2\{\wp(x) - e_1\}},$$

It follows that

$$\alpha(e_1 - e_2)(e_1 - e_3) = \frac{\{\zeta(x) + e_1 x\}\{\wp(x) - e_1\} + \frac{1}{2}\wp'(x)}{\wp(x) - e_1}, \quad (11)$$

and we can now write

$$p_1 = \pm \frac{12\pi e^2}{5(e_1 - e_2)^2 (e_1 - e_3)^2} \int_0^\epsilon \frac{[\{\zeta(x) + e_1 x\}\{\wp(x) - e_1\} + \frac{1}{2}\wp'(x)]^2}{\wp(x) - e_1} \times \{5\wp^2(x) + 2e_1\wp(x) - e_1^2 + 3e_2e_3\}\, dx.$$

Towards the evaluation of this integral we make use of a key-function. The part of the integrand involving $\{\zeta(x) + e_1 x\}^2$ can be written

$$\tfrac{1}{2}\{\zeta(x) + e_1 x\}^2 \frac{d}{dx}[\wp'(x)\{\wp(x) - e_1\}],$$

and thus we are led to try differentiating the function

$$\phi(x) \equiv [\{\zeta(x) + e_1 x\}\{\wp(x) - e_1\} + \tfrac{1}{2}\wp'(x)]^2 \frac{\wp'(x)}{\wp(x) - e_1}. \quad (12)$$

The differentiation is a trifle tedious to carry out, and the details are here suppressed. The result is

$$\phi'(x) = \frac{2[\{\zeta(x) + e_1 x\}\{\wp(x) - e_1\} + \frac{1}{2}\wp'(x)]^2}{(x) - e_1} \{5\wp^2(x) + 2e_1\wp(x) - e_1^2 + 3e_2e_3\} - 2(e_1 - e_2)(e_1 - e_3)\{\zeta(x) + e_1 x\}\wp'(x) - 4(e_1 - e_2)(e_1 - e_3)\{\wp^2(x) + e_1\wp(x) + e_2e_3\}.$$

---

* See Whittaker, *Modern Analysis*, p. 373.

Now $\int \{\zeta(x)+e_1 x\}\,\wp'(x)\,dx = \{\zeta(x)+e_1 x\}\,\wp(x)+\int \{\wp(x)-e_1\}\,\wp(x)\,dx,$

and the value of $\int \wp^2(x)\,dx$ has already been utilised. Thus the integral in p_1 is got by attaching limits ϵ and 0 to the expression

$$\tfrac{1}{2}\phi(x)+(e_1-e_2)(e_1-e_3)\left[\{\zeta(x)+e_1 x\}\,\wp(x)-e_1\zeta(x)+\tfrac{1}{2}\wp'(x)+(e_1^2+e_2e_3)\,x\right].$$

It may be shown without difficulty that this expression vanishes for $x=0$. Hence

$$p_1 = \pm\frac{12\pi e^2}{5(e_1-e_2)^2(e_1-e_3)^2}H, \tag{13}$$

where

$$H = \tfrac{1}{2}\phi(\epsilon)+(e_1-e_2)(e_1-e_3)\left[\{\zeta(\epsilon)+e_1\epsilon\}\,\wp(\epsilon)-e_1\zeta(\epsilon)+\tfrac{1}{2}\wp'(\epsilon)+(e_1^2+e_2e_3)\,\epsilon\right].$$

Now, by comparison of (11) and (12), it is seen that

$$\phi(x) = \alpha^2(e_1-e_2)^2(e_1-e_3)^2\,\{\wp(x)-e_1\}\,\wp'(x),$$

and, since a_0 is got from a by putting $x=\epsilon$,

$$\phi(\epsilon) = 2a_0^2(e_1-e_2)^2(e_1-e_3)^2\,a^3bc.$$

Hence, from (7),
$$p_0 = \frac{6\pi e^2}{5(e_1-e_2)^2(e_1-e_3)^2}\,\phi(\epsilon).$$

For reasons to be explained below we shall take the negative sign in (13). This causes $\phi(\epsilon)$ to disappear in p_0+p_1, and we are left with

$$\begin{aligned} p &= p_0+p_1 \\ &= \frac{12\pi e^2}{5(e_1-e_2)(e_1-e_3)}\left[e_1\zeta(\epsilon)-e_1\epsilon\,\wp(\epsilon)-\zeta(\epsilon)\,\wp(\epsilon)-\tfrac{1}{2}\wp'(\epsilon)-(e_1^2+e_2e_3)\,\epsilon\right]. \end{aligned}$$

Moreover, the equation (11) gives

$$a_0a^2(e_1-e_2)(e_1-e_3) = -e_1\zeta(\epsilon)+e_1\epsilon\,\wp(\epsilon)+\zeta(\epsilon)\,\wp(\epsilon)+\tfrac{1}{2}\wp'(\epsilon)-e_1^2\epsilon,$$

so that
$$\begin{aligned} p &= -\frac{12\pi e^2}{5(e_1-e_2)(e_1-e_3)}\left[a^2a_0(e_1-e_2)(e_1-e_3)+\epsilon\,(2e_1^2+e_2e_3)\right] \\ &= -\tfrac{12}{5}\pi e^2(\epsilon+a^2a_0). \end{aligned}$$

The expression may be made in terms of the more usual quantities

$$D = \int_0^\infty \frac{d\theta}{(a^2+\theta)^{\frac{1}{2}}(b^2+\theta)^{\frac{1}{2}}(c^2+\theta)^{\frac{1}{2}}},$$

$$A = \int_0^\infty \frac{d\theta}{(a^2+\theta)^{\frac{3}{2}}(b^2+\theta)^{\frac{1}{2}}(c^2+\theta)^{\frac{1}{2}}}.$$

For we have $$D = \int_{h^2}^{\infty} \frac{d\phi}{\Delta} = -2\epsilon,$$

while $$A = \int_{h^2}^{\infty} \frac{d\phi}{\Delta(\phi - e_1)} = 2\alpha_0.$$

Hence $$p = \tfrac{6}{5}\pi e^2 (D - Aa^2)$$

similarly $$q = \tfrac{6}{5}\pi e^2 (D - Bb^2)$$

$$r = \tfrac{6}{5}\pi e^2 (D - Cc^2) \Big\}. \qquad (14)$$

We can now justify the taking of the negative sign in equation (13). As it is, we have

$$s = p + q + r = \tfrac{12}{5}\pi e^2 D,$$

since $$Aa^2 + Bb^2 + Cc^2 = D.$$

This agrees with the ordinary result derived from the theory of attractions, s being, in fact, 8π times the electrostatic energy of the distribution. If the positive sign had been taken, the agreement would not have come about. Of course, we could have settled the matter by rather careful definition of the radicals and use of the theory of functions, but the above method achieves the same end with less labour.

The Constants of the Derived Ellipsoid.

For the sake of completeness it is desirable to show how a, b, c, l, m, n may be found from the constants a', b', c', l', m', n' of actual motion. Take as axes the principal axes of the actual ellipsoid. The projection of every line in the direction of motion is lengthened in the ratio κ^{-1} in the derived space, and the transformation formulæ from (x', y', z') to the corresponding derived point (x, y, z) are easily seen to be three of the form

$$x' = x + (\kappa - 1)\, l' (l'x + m'y + n'z),$$

or $$x' = A'x + H'y + G'z, \ldots,$$

where $$A' = 1 - (1 - \kappa)\, l'^2,$$

$$F' = -(1 - \kappa)\, m'n'.$$

Thus the derived ellipsoid is

$$\frac{(A'x+H'y+G'z)^2}{a'^2}+\frac{(H'x+B'y+F'z)^2}{b'^2}+\frac{(G'x+F'y+C'z)^2}{c'^2}=1.$$

The equation being written

$$(a_{11}, a_{22}, a_{33}, a_{23}, a_{31}, a_{12})(x, y, z)^2 = 1,$$

we see that a, b, c are the values of $\lambda^{-\frac{1}{2}}$ derived from the discriminating cubic

$$\begin{vmatrix} a_{11}-\lambda & a_{12} & a_{13} \\ a_{21} & a_{22}-\lambda & a_{23} \\ a_{31} & a_{32} & a_{33}-\lambda \end{vmatrix} = 0,$$

and the corresponding axis (θ, ϕ, ψ) is got from the equation

$$\begin{aligned} (a_{11}-\lambda)\theta+a_{12}\phi+a_{13}\psi &= 0, \\ a_{21}\theta+(a_{22}-\lambda)\phi+a_{23}\psi &= 0, \\ a_{31}\theta+a_{32}\phi+(a_{33}-\lambda)\psi &= 0. \end{aligned}$$

The determination referred to has thus been indicated.

The Couple on a Rigid Electron.

We can now find in general form the couple necessary to keep the electron, supposed rigid, in its uniform state of motion. According to the principles laid down by Abraham* this couple is the vector product of velocity and momentum, or symbolically

$$\Theta = [v, G].$$

Referring back to the expression for G, we see that only the part $-\frac{\beta}{4\pi c}(lp, mq, nr)$ contributes to this couple, *i.e.*,

$$\begin{aligned} \Theta &= \left[\frac{\beta(lp, mq, nr)}{4\pi c}, \quad \beta c(l, m, n)\right] \\ &= \frac{\beta^2}{4\pi}\begin{Vmatrix} lp, & mq, & nr \\ l, & m, & n \end{Vmatrix} \\ &= \frac{\beta^2}{4\pi}\{mn(q-r), \ nl(r-p), \ lm(p-q)\}. \end{aligned} \tag{15}$$

* *Loc. cit.*, p. 130.

Summary of Results.

Taking as usual the principal axes of the derived ellipsoid as axes, we can write the results

$$W = \frac{3e^2}{10\kappa}[D+\beta^2\Sigma Aa^2l^2],$$

$$G_x = \frac{3le^2\beta}{10\kappa c}[D+(1-\kappa)\Sigma Aa^2l^2+\kappa Aa^2],$$

$$G_y = \frac{3me^2\beta}{10\kappa c}[D+(1-\kappa)\Sigma Aa^2l^2+\kappa Bb^2],$$

$$G_z = \frac{3ne^2\beta}{10\kappa c}[D+(1-\kappa)\Sigma Aa^2l^2+\kappa Cc^2],$$

$$\Theta_x = -\tfrac{3}{10}e^2\beta^2mn(Bb^2-Cc^2),$$

$$\Theta_y = -\tfrac{3}{10}e^2\beta^2nl(Cc^2-Aa^2),$$

$$\Theta_z = -\tfrac{3}{10}e^2\beta^2lm(Aa^2-Bb^2).$$

AN ASYMPTOTIC FORMULA FOR THE GENERALISED HYPERGEOMETRIC SERIES

By T. J. I'A. BROMWICH.

[Received November 8th, 1908.—Read November 12th, 1908.]

THE following note contains an extension and an independent investigation of an asymptotic formula recently contributed to the *Proceedings* of the Society by Prof. M. J. M. Hill.*

1. *Jensen's Lemma.*†

When the sums

$$|a_1+a_2+\ldots+a_n| \quad \text{and} \quad |a_1|+|a_2|+\ldots+|a_n|,$$

both tend to infinity with n, *and in such a way as to satisfy the condition*

$$|a_1|+|a_2|+\ldots+|a_n| < K\{|a_1+a_2+\ldots+a_n|\},$$

where K *is a constant, then*

$$\lim_{n\to\infty} \frac{b_1+b_2+\ldots+b_n}{a_1+a_2+\ldots+a_n} = \lim_{n\to\infty} \frac{b_n}{a_n}$$

provided that the right-hand limit exists.

For, suppose that $\lim (b_n/a_n) = l$, and then write

$$c_n = b_n - la_n.$$

---

* *Proc. London Math. Soc.*, Ser. 2, Vol. 5, p. 335, and Vol. 6, p. 339. It appears to me, however, that Prof. Hill's proof in the second paper is not perfectly general. In fact, on p. 345, certain inequalities are used which seem to be only valid when the factors denoted there by $t_{r,s}$ are real and positive: this involves the assumption that α, β are real. To complete the general proof on these lines, some theorem similar to Jensen's Lemma might be used.

† It is an extension of Stolz's generalised form of a familiar theorem of Cauchy's (see my *Infinite Series*, Art. 152); the result was given in the *Tidskrift for Mathematik* (5), Bd. 2, p. 81, 1884.

By hypothesis, m can be found so that

$$\left|\frac{c_n}{a_n}\right| = \left|\frac{b_n}{a_n} - l\right| < \epsilon, \qquad \text{if } n > m,$$

no matter how small ϵ may be.

Then we have

$$\begin{aligned} |c_{m+1}+c_{m+2}+\ldots+c_n| &\leqslant |c_{m+1}|+|c_{m+2}|+\ldots+|c_n| \\ &< \epsilon(A_n - A_m), \end{aligned}$$

where $$A_n = |a_1|+|a_2|+\ldots+|a_n|.$$

Consequently

$$\left|\frac{c_1+c_2+\ldots+c_n}{a_1+a_2+\ldots+a_n}\right| < \frac{|c_1+c_2+\ldots+c_m|+\epsilon(A_n-A_m)}{|a_1+a_2+\ldots+a_n|}.$$

Thus, since $$|a_1+a_2+\ldots+a_n| > A_n/K,$$

we find $$\left|\frac{c_1+c_2+\ldots+c_n}{a_1+a_2+\ldots+a_n}\right| < K\left\{\epsilon\left(1-\frac{A_m}{A_n}\right)+\frac{|c_1+c_2+\ldots+c_m|}{A_n}\right\}.$$

In the last inequality make n tend to infinity, and then (since m is fixed and $A_n \to \infty$), we find that the right-hand side tends to $K\epsilon$ as a limit. Consequently ν can be found so that

$$\left|\frac{c_1+c_2+\ldots+c_n}{a_1+a_2+\ldots+a_n}\right| \leqslant (K+1)\epsilon, \qquad \text{if } n > \nu.$$

Hence, since the modulus is always positive, we have

$$\lim_{n\to\infty} \frac{c_1+c_2+\ldots+c_n}{a_1+a_2+\ldots+a_n} = 0.$$

Or, replacing c_n by $b_n - la_n$, we find

$$\lim_{n\to\infty} \frac{b_1+b_2+\ldots+b_n}{a_1+a_2+\ldots+a_n} = l = \lim_{n\to\infty} \frac{b_n}{a_n}.$$

It will be convenient to write this equation in the form

$$b_1+b_2+\ldots+b_n \sim l(a_1+a_2+\ldots+a_n),$$

using the asymptotic symbol $\sim$ to imply that when

$$B_n \sim lA_n,$$

both $|B_n|$ and $|A_n|$ tend to infinity, and that $\lim (B_n/A_n) = l$. Of course this is *not* equivalent to the statement that $(B_n - lA_n)$ tends to zero.

2. It is now to be proved that Jensen's conditions are satisfied by taking

$$a_n = n^{-s},$$

provided that *the real part of s is less than* 1.

In fact it is known, from the theory of Riemann's ξ-function, that the asymptotic equation

$$a_1+a_2+\ldots+a_n \sim \int_0^n x^{-s}\,dx \sim \frac{n^{1-s}}{1-s}$$

is true if $R(s) < 1$.

As this conclusion is fundamental for what follows, it is perhaps worth while to write out a direct proof. When $0 < R(s) < 1$, the result is an immediate consequence of a theorem proved in an earlier paper of mine (*Proceedings*, Ser. 2, Vol. 6, p. 331); but when $R(s) < 0$, the conditions used there are no longer satisfied.

Thus we shall take $s = p + iq$, and suppose p to be negative; now write

$$v_n = \int_{n-1}^{n} \frac{dx}{x} - \frac{1}{n^s} = \int_0^1 dx \left\{\frac{1}{(n-x)^s} - \frac{1}{n^s}\right\} = \int_0^1 dx \int_0^x \frac{s\,dy}{(n-y)^{s+1}}.$$

Hence
$$|v_n| < |s| \int_0^1 dx \int_0^x \frac{dy}{(n-y)^{p+1}}.$$

Thus, if $(p+1)$ is negative, we have at once

$$|v_n| < |s| \,.\, n^{-(p+1)},$$

and so
$$|v_1| + |v_2| + \ldots + |v_n| < |s| \left\{(n+1)^{-p}/(-p)\right\}.$$

But, if $0 < p+1 < 1$, the inequalities become

$$|v_n| < |s| \int_0^1 \frac{dy}{(n-y)^{p+1}} = \frac{|s|}{-p}\left\{n^{-p} - (n-1)^{-p}\right\},$$

and so
$$|v_1| + |v_2| + \ldots + |v_n| < \frac{|s|}{|p|}\, n^{-p}.$$

Finally, if $p = -1$, we get $\quad |v_n| < |s| \int_0^1 dy \leqslant |s|,$

and so
$$|v_1| + |v_2| + \ldots + |v_n| < |s| \,.\, n = |s| \,.\, n^{-p}.$$

Hence, in all cases, we can write

$$|v_1| + |v_2| + \ldots + |v_n| < Kn^{-p}, \quad \text{if} \quad p = R(s) < 0,$$

where K is a constant.

But
$$v_1 + v_2 + \ldots + v_n = \int_0^n x^{-s}dx - (a_1 + a_2 + \ldots + a_n),$$

and so we see that
$$\left| \int_0^n x^{-s}dx - (a_1 + a_2 + \ldots + a_n) \right| < Kn^{-p},$$

while
$$\left| \int_0^n \frac{dx}{x^s} \right| = \left| \frac{n^{1-s}}{1-s} \right| = \frac{n^{1-p}}{\left\{(1-p)^2 + q^2\right\}^{\frac{1}{2}}},$$

from which we see that
$$\left| \int_0^n \frac{dx}{x^s} - (a_1 + a_2 + \ldots + a_n) \right| < \frac{K}{n} \left| \int_0^n \frac{dx}{x^s} \right|$$

Thus the asymptotic equation is now evident.

Also, when we write $s = p+iq$, we have $|a_n| = n^{-p}$, and so

$$A_n = |a_1|+|a_2|+\ldots+|a_n| \sim \int_0^n \frac{dx}{x^p} \sim \frac{n^{1-p}}{1-p}.$$

Thus, since $|n^{1-s}| = n^{1-p}$, we see that

$$|a_1|+|a_2|+\ldots+|a_n| \sim \frac{|1-s|}{1-p}\{|a_1+a_2+\ldots+a_n|\},$$

and consequently Jensen's conditions are certainly verified, because n^{1-p} tends to infinity with n.

When $R(s) = 1$, it follows, from the results proved in my paper quoted above, that $a_1+a_2+\ldots+a_n$ oscillates between finite limits, the amplitude of oscillation being $2/q$; while $|a_1|+|a_2|+\ldots+|a_n|$ tends to infinity like $\log n$. Consequently, Jensen's conditions are broken in general, and nothing more can be obtained on these lines; but in the special case $s = 1$, we have the equation

$$|a_1+a_2+\ldots+a_n| = |a_1|+|a_2|+\ldots+|a_n| \sim \log n,$$

and so the conditions are then satisfied.

3. *The Asymptotic Formula for the Generalised Hypergeometric Series.*

Let us write b_n for the fraction

$$\frac{\{a_1(a_1+1)\ldots(a_1+n-1)\}\{a_2(a_2+1)\ldots(a_2+n-1)\}\ \ldots\ \{a_k(a_k+1)\ldots(a_k+n-1)\}}{\{\beta_1(\beta_1+1)\ldots(\beta_1+n-1)\}\{\beta_2(\beta_2+1)\ldots(\beta_2+n-1)\}\ \ldots\ \{\beta_k(\beta_k+1)\ldots(\beta_k+n-1)\}},$$

then we shall consider the asymptotic formula for

$$B_n = b_1+b_2+\ldots+b_n$$

as $n \to \infty$. We put

$$P_n = \frac{\Gamma(a_1+n)\,\Gamma(a_2+n)\ldots\Gamma(a_k+n)}{\Gamma(\beta_1+n)\,\Gamma(\beta_2+n)\ldots\Gamma(\beta_k+n)},$$

and then $$b_n = P_n/P_0.$$

Now we have the known asymptotic formula

$$\Gamma(a_1+n) \sim \Gamma(n)\,n^{a_1},$$

so that $$P_n \sim n^{-s},$$

where $$s = (\beta_1+\beta_2+\ldots+\beta_k)-(\alpha_1+\alpha_2+\ldots+\alpha_k).$$

Hence, if we write $a_n = n^{-s}$, as in § 2, we have

$$\lim \frac{b_n}{a_n} = \lim \frac{P_n}{a_n P_0} = \frac{1}{P_0}.$$

Thus since we have seen that the series Σa_n satisfies Jensen's conditions (of § 1), *the asymptotic equation follows*

$$B_n \sim A_n/P_0 \sim \frac{1}{P_0}\frac{n^{1-s}}{1-s},$$

provided that the real part of s *is less than* 1.

But when the real part of s is equal to 1, Jensen's conditions are no longer verified and an independent method of treatment must be used. It is easy to prove from the asymptotic formula for $\log \Gamma(x)$, when x is large, that

$$\frac{\Gamma(n+\alpha)}{\Gamma(n)} = n^{\alpha}\left(1+\frac{\alpha^2-\alpha}{2n}+\frac{\rho_n}{n^2}\right),$$

where $|\rho_n|$ remains always less than some fixed number K.

Thus we find $$P_n = n^{-s}\left(1+\frac{\Sigma\alpha^2-\Sigma\beta^2+s}{2n}+\frac{\sigma_n}{n^2}\right),$$

where $$|\sigma_n| < K.$$

Now, if the real part of s is equal to 1, we have

$$|n^{-(1+s)}| = n^{-2}, \quad |n^{-(2+s)}| = n^{-3},$$

and so the series $\Sigma n^{-(1+s)}$, $\Sigma n^{-(2+s)}$ are absolutely convergent; thus the series $\Sigma(P_n - n^{-s})$ is convergent. Consequently, since $P_n = P_0 b_n$, we see that

$$P_0 B_n - (1^{-s}+2^{-s}+\ldots+n^{-s})$$

tends to a definite limit as $n \to \infty$. But (see p. 328 of my paper quoted above) the expression

$$(1^{-s}+2^{-s}+\ldots+n^{-s}) - n^{1-s}/(1-s)$$

has also a definite limit, because the real part of s is equal to 1. Combining these results, we see that

$$P_0 B_n - n^{1-s}/(1-s)$$

tends to a definite limit as $n \to \infty$; or, finally—

When the real part of s *is equal to* 1, *the sum* B_n *oscillates like*

$\frac{1}{P_0}\frac{n^{1-s}}{1-s}$, *which has an amplitude of variation* $2/|qP_0|$, *when* $s=1+iq$.

If, however, $q=0$ so that $s=1$, Jensen's conditions are satisfied again, and then we have the asymptotic formula

$$B_n \sim \frac{1}{P_0}\left(1+\tfrac{1}{2}+\ldots+\frac{1}{n}\right) \sim \frac{1}{P_0}\log n.$$

It is easy to deduce Prof. Hill's results from the foregoing, by writing

$$k=2, \quad \beta_2=1, \quad s=(\beta_1+1)-(\alpha_1+\alpha_2),$$

then the formulæ become

$$B_n \sim \frac{\Gamma(\beta_1)}{\Gamma(\alpha_1)\Gamma(\alpha_2)}\frac{n^{\alpha_1+\alpha_2-\beta_1}}{\alpha_1+\alpha_2-\beta_1}, \quad \text{if} \quad R(\alpha_1+\alpha_2-\beta_1)>0,$$

$$B_n - \frac{\Gamma(\beta_1)}{\Gamma(\alpha_1)\Gamma(\alpha_2)}\frac{n^{\alpha_1+\alpha_2-\beta_1}}{\alpha_1+\alpha_2-\beta_1} \text{ tends to a limit, if } R(\alpha_1+\alpha_2-\beta_1)=0,$$

$$B_n \sim \frac{\Gamma(\alpha_1+\alpha_2)}{\Gamma(\alpha_1)\Gamma(\alpha_2)}\log n, \quad \text{if} \quad \alpha_1+\alpha_2-\beta=0,$$

of which the first and last agree with Prof. Hill's formulæ.

THE INFLUENCE OF VISCOSITY AND CAPILLARITY ON WAVES OF FINITE AMPLITUDE

By W. J. Harrison.

[Received October 14th, 1908.—Read November 12th, 1908.]

In this paper three problems are considered with the intention of rendering the theory of waves of finite amplitude more physical. The most important of the three is that first dealt with, viz., the effect of viscosity on liquid waves of this type. The other two are interesting and give new results, but the analysis involved is not in any way original. They deal with the influence of capillarity on a train of finite waves and on the solitary wave of Scott Russell.

A brief summary will be given here of the more important results obtained below.

(*a*) It has been found impossible to proceed beyond a second approximation in discussing the effect of viscosity on a train of finite waves, treating as small the ratio of the amplitude to the wave-length. To this order the velocity of propagation and the rate of decay of the wave are unaffected. The profile of the wave is such that the forward slope is steeper than the rear slope. In the absence of viscosity the profile is given by

$$\eta = \beta \cos kx + \tfrac{1}{2}k\beta^2 \cos 2kx.$$

With viscosity the profile is given at any instant by

$$\eta = \beta \cos kx + \tfrac{1}{2}k\beta^2 \cos 2kx - k^2 \{\nu^2/4gk\}^{\frac{1}{4}} \beta^2 \sin 2kx.$$

The most interesting result is the calculation of the displacement of a particle along the surface before the waves die down. It is also possible to calculate the flux across a vertical plane of unit breadth. These quantities are somewhat great for water waves of long wave-length and a fair amplitude. For example, in the case of waves of length 100 cms. and of initial amplitude 1 cm., the total flux across a vertical plane of unit breadth is 22806 cubic cms., and the displacement of a particle along the surface is 2864 cms. In an actual case the displacement would be very much smaller than this, owing to the greater rate of decay caused by

the contact of air with the water.* A hypothetical calculation taking this into account is given at the end of the section. The largeness of these quantities is due to the fact that, if viscosity be neglected, they become infinite, as Stokes has shewn.

(*b*) The second section deals with the effect of capillarity on a train of finite waves. When the wave-length is great the velocity of propagation is given by

$$c^2 = (g/k + T'k)(1 + k^2\beta^2),$$

where

$$y = \beta \cos kx$$

is the first approximation to the form of the wave. The profile is unaffected.

When the wave-length is small, the velocity is given by

$$c^2 = (g/k + T'k)(1 + \tfrac{1}{4}k^2\beta^2).$$

The amplitude of the secondary wave instead of being $\frac{1}{2}k\beta^2$ is $-\frac{1}{4}k\beta^2$. Hence the wave has a deeper trough than crest.

The minimum wave velocity to a third order is $2\sqrt{(gT')}\{1 - g\beta^2/2T'\}$, instead of $2\sqrt{(gT')}$.

(*c*) It was pointed out by Scott Russell that only waves of elevation could travel as solitary waves, and that a wave of depression splits up into a number of short waves. It is shewn in the third section that if capillarity be taken into account, provided that the depth be less than $\frac{1}{2}$ cm., only waves of depression can travel. There are indications that, if a higher order of approximation could be obtained, short waves of depression could travel if the depth be greater than $\frac{1}{2}$ cm., and that, if the depth be less than $\frac{1}{2}$ cm., waves of elevation of very short wave-length could also travel.

The Influence of Viscosity on Waves of Finite Amplitude.

1. The difficulties of the analysis make it impossible to go beyond a second approximation in which squares of the amplitude are retained. The problem is one of two dimensions, so that a stream function ψ can be employed which satisfies the equation

$$\left(\nu\nabla^2 - \frac{\partial}{\partial t}\right)\nabla^2\psi = \left(\frac{\partial\psi}{\partial y}\frac{\partial}{\partial x} - \frac{\partial\psi}{\partial x}\frac{\partial}{\partial y}\right)\nabla^2\psi.$$

This equation is easily obtained from the equations of motion of a liquid in two dimensions by eliminating the pressure and extraneous forces, provided they form a conservative system. The pressure at any point is

* *Proc. London Math. Soc.*, Ser. 2, Vol. 6, p. 399.

given by the equations of motion when the stream function has been found.

As the equations are no longer linear it is necessary at times to avoid the use of imaginary quantities; on this account their use will be almost entirely avoided. We assume as a solution of the above equation

$$\psi = \{f_0(y)\cos(kx+pt)+f_1(y)\sin(kx+pt)\}\,e^{at} + \{F_0(y)\cos 2(kx+pt)+F_1(y)\sin 2(kx+pt)+\phi(y)\}\,e^{2at},$$

where squares of f_0 and f_1 are retained, and squares of F_0, F_1, ϕ are neglected.

On substitution we obtain the following equations to determine f_0 and f_1,

$$\left(\frac{d^2}{dy^2}-k^2\right)\left\{\nu\left(\frac{d^2}{dy^2}-k^2\right)f_0-af_0-pf_1\right\}=0,$$

$$\left(\frac{d^2}{dy^2}-k^2\right)\left\{\nu\left(\frac{d^2}{dy^2}-k^2\right)f_1-af_1+pf_0\right\}=0.$$

The solutions of these are

$$f_0 = Ae^{ky}+Be^{\lambda y}\cos\mu y+Ce^{\lambda y}\sin\mu y,$$

$$f_1 = A'e^{ky}+Ce^{\lambda y}\cos\mu y-Be^{\lambda y}\sin\mu y,$$

where

$$\nu(\lambda^2-\mu^2-k^2) = a,$$

$$2\nu\lambda\mu = p.$$

The corresponding part of ψ can be written in the form

$$[A\cos(kx+pt)+A'\sin(kx+pt)]\,e^{ky+at} + [B\cos(kx+pt+\mu y)+C\sin(kx+pt+\mu y)]\,e^{\lambda y+at}.$$

Writing

$$\frac{d^2}{dy^2}-k^2 = D_1, \qquad \frac{d^2}{dy^2}-4k^2 = D_2,$$

the equations to determine F_0, F_1, ϕ can be written

$$D_2(\nu D_2F_0-2aF_0-2pF_1) = \frac{k}{2}\left[\frac{df_0}{dy}D_1f_1+\frac{df_1}{dy}D_1f_0-f_1\frac{d}{dy}D_1f_0-f_0\frac{d}{dy}D_1f_1\right], \quad (1)$$

$$D_2(\nu D_2F_1-2aF_1+2pF_0) = \frac{k}{2}\left[-\frac{df_0}{dy}D_1f_0+f_0\frac{d}{dy}D_1f_0+\frac{df_1}{dy}D_1f_1-f_1\frac{d}{dy}D_1f_1\right], \quad (2)$$

$$\left(\nu\frac{d^4}{dy^4}-2a\frac{d^2}{dy^2}\right)\phi = \frac{k}{2}\left[\frac{df_0}{dy}D_1f_1-\frac{df_1}{dy}D_1f_0-f_1\frac{d}{dy}D_1f_0+f_0\frac{d}{dy}D_1f_1\right]. \quad (3)$$

We shall find later that $B = 0$ from the first order relations, also that A' depends on ν in a higher order than the first. Hence, in determining F_0, F_1 and ϕ, we shall omit A' and B.

The terms on the right-hand side of (1) reduce to

$$(P\cos\mu y+Q\sin\mu y)\,e^{(k+\lambda)y},$$

where
$$P = kAC\,(k\alpha-\lambda\alpha+\mu p)/2\nu,$$
$$Q = kAC\,(\mu\alpha-kp+p\lambda)/2\nu.$$

The terms on the right-hand side of (2) are

$$(Q\cos\mu y-P\sin\mu y)\,e^{(k+\lambda)y}.$$

The complete solutions of (1) and (2) can therefore be written in the forms

$$F_0 = De^{2ky}+(E\cos\mu' y+F\sin\mu' y)\,e^{\lambda' y}+(P'\cos\mu y+Q'\sin\mu y)\,e^{(k+\lambda)y},$$

$$F_1 = D'e^{2ky}+(F\cos\mu' y-E\sin\mu' y)\,e^{\lambda' y}+(Q'\cos\mu y-P'\sin\mu' y)\,e^{(k+\lambda)y},$$

where
$$\nu\,(\lambda'^2-\mu'^2-4k^2) = 2\alpha,$$
$$2\nu\lambda'\mu' = 2p.$$

Also $(P'\cos\mu y+Q'\sin\mu y)\,e^{(k+\lambda)y}$ is the real part of the expression

$$[\{\nu(k+\lambda+i\mu)^2-4k^2\nu-2\alpha\}\,(P-iQ)+2p\,(Q+iP)]\,e^{(k+\lambda+i\mu)}$$
$$\div\,\{(k+\lambda+i\mu)^2-4k^2\}\,[\{\nu(k+\lambda+i\mu)^2-4k^2\nu-2\alpha\}^2+4p^2].$$

The terms on the right-hand side of (3) reduce to

$$(P_1\cos\mu y+Q_1\sin\mu y)\,e^{(k+\lambda)y}-pk\lambda C^2e^{2\lambda y}/\nu,$$

where
$$P_1 = \quad kAC\,(k\alpha+\lambda\alpha-\mu p)/2\nu,$$
$$Q_1 = -\,kAC\,(kp+\lambda p+\mu\alpha)/2\nu.$$

Hence $\phi = M_1\cos\{\sqrt{(-2\alpha/\nu)}\,y\}+M_2\sin\{\sqrt{(-2\alpha/\nu)}\,y\}+Ne^{2\lambda y}$
$$+(P_2\cos\mu y+Q_2\sin\mu y)\,e^{(k+\lambda)y},$$

where
$$N = -pkC^2/[8\lambda\nu\,(2\nu\lambda^2-\alpha)],$$

and $(P_2\cos\mu y+Q_2\sin\mu y)\,e^{(k+\lambda)y}$ is the real part of

$$(P_1-iQ_1)\,e^{(k+\lambda+i\mu)y}/(k+\lambda+i\mu)^2\,\{\nu\,(k+\lambda+i\mu)^2-2\alpha\}.$$

Hence the complete expression for ψ is

$$\begin{aligned}\psi = {} & [A\cos(kx+pt)+A'\sin(kx+pt)]\,e^{ky+\alpha t}\\ & +[C\sin(kx+pt+\mu y)+B\cos(kx+pt+\mu y)]\,e^{\lambda y+\alpha t}\\ & +[\{D\cos 2(kx+pt)+D'\sin 2(kx+pt)\}\,e^{2ky}\\ & +\{E\cos(2kx+2pt+\mu' y)+F\sin(2kx+2pt+\mu' y)\}\,e^{\lambda' y}\\ & +\{P'\cos(2kx+2pt+\mu y)+Q'\sin(2kx+2pt+\mu y)\\ & \qquad +P_2\cos\mu y+Q_2\sin\mu y\}\,e^{(k+\lambda)y}\\ & +Ne^{2\lambda y}+M_1\cos\sqrt{(-2\alpha/\nu)}\,y+M_2\sin\sqrt{(-2\alpha/\nu)}\,y]\,e^{2\alpha t}.\end{aligned}$$

2. Let the free surface be

$$y=\eta=\beta\cos(kx+pt)\,e^{\alpha t}+\{\gamma\cos 2(kx+pt)+\delta\sin 2(kx+pt)\}\,e^{2\alpha t}.$$

The boundary conditions are

$$(1)\quad \frac{\partial F}{\partial t}+u\frac{\partial F}{\partial x}+v\frac{\partial F}{\partial y}=0 \qquad (y=\eta),$$

where

$$F=y-\eta;$$

$$(2)\quad \frac{\partial u}{\partial y}+\frac{\partial v}{\partial x}=0 \qquad (y=\eta);$$

$$(3)\quad p_{yy}=0 \qquad (y=\eta),$$

where

$$p_{yy}/\rho=-p/\rho+2\nu\frac{\partial v}{\partial y}.$$

Substituting in these equations and taking only the terms of the first order, remembering that to this order

$$p/\rho=-\frac{\partial\Phi}{\partial t}-g\eta,$$

where Φ is the velocity potential corresponding to the irrotational part of the motion, we have

$$k(A'+C)=-\alpha\beta, \tag{4}$$

$$k(A+B)=-p\beta, \tag{5}$$

$$2k^2A+(k^2+\lambda^2-\mu^2)B+2\lambda\mu C=0, \tag{6}$$

$$2k^2A'+(k^2+\lambda^2-\mu^2)C-2\lambda\mu B=0, \tag{7}$$

$$(\alpha+2\nu k^2)A'-pA+2\nu k(\lambda C-\mu B)=g\beta, \tag{8}$$

$$(\alpha+2\nu k^2)A+pA'+2\nu k(\mu C+\lambda B)=0. \tag{9}$$

Eliminating A and A' from (6) and (7) by means of (4) and (5), we have

$$aB+pC = 2k\nu p\beta,$$

$$aC-pB = 2k\nu a\beta.$$

Hence $B = 0, \qquad C = 2k\nu\beta.$

From (4) and (5), $A = -p\beta/k,$

$$A' = -(a+2\nu k^2)\beta/k.$$

Substituting in (8) and (9) we obtain equations giving p and a, the approximate solutions of which are

$$a = -2\nu k^2, \qquad p = \sqrt{(gk)}.$$

The neglect of A' and B in the terms of higher order is justified.

3. We proceed to determine the approximate values of P', Q', P_2, Q_2. Regarding ν as small and keeping only the more important terms in each,

$$P' = \nu P/p^2,$$

$$Q' = \nu Q/p^2,$$

where $P = kAC\mu p/2\nu$

$$= -\mu k p^2\beta^2,$$

$$Q = kAC p\lambda/2\nu$$

$$= -\lambda k p^2\beta^2.$$

Hence $P' = -\mu\nu k\beta^2,$

$$Q' = -\lambda\nu k\beta^2.$$

Also $P_2 = -\nu\{P_1(p-4k\mu\nu)+4k\nu Q_1(\lambda-3k)\}/p^3,$

$$Q_2 = -\nu\{Q_1(p-4k\mu\nu)-4k\nu P_1(\lambda-3k)\}/p^3,$$

where $P_1 = kp\beta^2\{\mu p+2k^2\nu\lambda\},$

$$Q_1 = kp\beta^2\{\lambda p+kp-2k^2\nu\mu\}.$$

Hence $P_2 = -k\nu\beta^2\{\mu-6k^2\lambda\nu/p\},$

$$Q_2 = -k\nu\beta^2\{\lambda-3k+6k^2\nu\mu/p\}.$$

The higher approximation in the case of P_2 and Q_2 will be found later to be necessary. Also

$$N = -k^3 p\beta^2/4\lambda^3.$$

4. We are now in a position to proceed to a discussion of the second order terms. From the first surface condition, we have the two equations

$$2\alpha\gamma+2p\delta+k\lambda\beta C+2kD'+2kF+2kQ'=0, \tag{10}$$

$$2p\gamma-2\alpha\delta+k^2\beta A+k\mu\beta C+2kD+2kP'=0. \tag{11}$$

From the condition that the tangential traction over the free surface is zero, we have the three equations

$$k^3\beta A+\tfrac{1}{2}(k^2+\lambda^2-\mu^2)\,\mu\beta C+\lambda^2\mu\beta C+2\alpha M_1/\nu+4\lambda^2 N$$
$$+\{(k+\lambda)^2-\mu^2\}\,P_2+2\mu\,(k+\lambda)\,Q_2=0, \tag{12}$$

$$k^3\beta A+\tfrac{1}{2}(k^2+\lambda^2-\mu^2)\,\mu\beta C+\lambda^2\mu\beta C+8k^2D+(\lambda'^2+4k^2-\mu'^2)\,E$$
$$+2\lambda'\mu'F+\{(k+\lambda)^2-\mu^2+4k^2\}\,P'+2\mu\,(k+\lambda)\,Q'=0, \tag{13}$$

$$\tfrac{1}{2}(k^2+\lambda^2-\mu^2)\,\lambda\beta C-\lambda\mu^2\beta C+8k^2D'+(\lambda'^2+4k^2-\mu'^2)\,F$$
$$-2\lambda'\mu'E+\{(k+\lambda)^2-\mu^2+4k^2\}\,Q'-2\mu(k+\lambda)\,P'=0. \tag{14}$$

It is much more difficult to obtain the pressure conditions. To find the pressure at a point we have to integrate for p from the equations of motion, which can be put into the form

$$\frac{\partial}{\partial x}\left\{\frac{\partial\Phi}{\partial t}+\tfrac{1}{2}\left(\frac{\partial\psi}{\partial y}\right)^2+\tfrac{1}{2}\left(\frac{\partial\psi}{\partial x}\right)^2\right\}+\frac{\partial}{\partial y}\left\{\frac{\partial\Psi}{\partial t}-\nu\nabla^2\Psi\right\}-\frac{\partial\psi}{\partial x}\nabla^2\psi=-\frac{1}{\rho}\frac{\partial p}{\partial x},$$

$$\frac{\partial}{\partial y}\left\{\frac{\partial\Phi}{\partial t}+\tfrac{1}{2}\left(\frac{\partial\psi}{\partial y}\right)^2+\tfrac{1}{2}\left(\frac{\partial\psi}{\partial x}\right)^2\right\}-\frac{\partial}{\partial x}\left\{\frac{\partial\Psi}{\partial t}-\nu\nabla^2\Psi\right\}-\frac{\partial\psi}{\partial y}\nabla^2\psi$$
$$=-\frac{1}{\rho}\frac{\partial p}{\partial y}-g,$$

where Φ is the velocity potential of the irrotational part of the motion, and Ψ is the stream function for the remainder. Now when we evaluate

$$\int\left[\frac{\partial}{\partial y}\left(\frac{\partial\Psi}{\partial t}-\nu\nabla^2\Psi\right)-\frac{\partial\psi}{\partial x}\nabla^2\psi\right]dx,$$

we find a term $f(y)\,x\beta^2$, which gives $Kx\beta^2$ when $y=0$. On any reasonable supposition K must be zero, and on substitution of the values of the constants involved, which have been already determined, we find that the terms of greatest importance in ν do vanish, and to the others no consideration can be given owing to the approximate character of the constants. The reason why K has been given a special consideration is that, if K is not identically zero, another condition $K=0$ is obtained which is superfluous.

With regard to the other terms of the equations, to avoid complication,

it suffices to say that to our order of approximation, both as regards β and ν, the pressure is effectively given by

$$-p/\rho = \frac{\partial \Phi}{\partial t} + \tfrac{1}{2}\left\{\left(\frac{\partial \psi}{\partial x}\right)^2 + \left(\frac{\partial \psi}{\partial y}\right)^2\right\} + gy.$$

Using this value of p in the equation

$$p_{yy}/\rho = -p/\rho + 2\nu \frac{\partial v}{\partial y},$$

we obtain the two remaining conditions, which we shall not write down here. The equations (10) to (14) are exact as regards ν, but the two equations yet to be given are much longer in their exact form, and will be given only after approximation.

5. We proceed to approximate to the equations on the supposition that, to a first approximation, γ is independent of ν, also D, that δ, D', F, E are dependent on $\sqrt{\nu}$ or higher order.

On this assumption

$$p\delta + kD' + kF = 0 \text{ (as regards } \sqrt{\nu}), \tag{15}$$

$$2p\gamma + 2kD = pk\beta^2, \tag{16}$$

$$2pF = 0 \quad (\sqrt{\nu}), \tag{17}$$

$$2pE = 0 \quad (\sqrt{\nu}), \tag{18}$$

$$M_1 = \lambda^2 N/k^2, \tag{19}$$

$$g\gamma + 2pD = p^2\beta^2/2, \tag{20}$$

$$g\delta + 2pD' = \nu k\lambda p\beta^2. \tag{21}$$

Hence we obtain $\gamma = \tfrac{1}{2}k\beta^2$.

From (15) and (21) $\delta = -k^2\{\nu^2/4gk\}^{\frac{1}{4}}\beta^2$.

M_2 is not determinate (a free vibration) and we can take it to be zero.

The form of the wave is given by

$$\eta = \beta\cos(kx+pt)e^{\alpha t} + \beta^2\left[\tfrac{1}{2}k\cos 2(kx+pt) - k^2\{\nu^2/4gk\}^{\frac{1}{4}}\sin 2(kx+pt)\right]e^{2\alpha t}.$$

In the absence of viscosity the profile is given by

$$\eta = \beta\cos(kx+pt) + \tfrac{1}{2}k\beta^2\cos 2(kx+pt).$$

The wave is no longer symmetrical. The effect of proceeding to a second order is to make the crest steeper than the trough, and the additional effect of viscosity is to make the leading side of the crest steeper than the

other. The feature which most distinguishes the results obtained by proceeding to a second approximation is the flux across a vertical plane perpendicular to the direction of propagation. There is also a corresponding horizontal displacement of a particle at the surface.

In order to find this displacement it is necessary to calculate the particle velocity. Let ξ, η be the component displacements of a particle. Then we have

$$\frac{\partial \psi}{\partial y} = \frac{\partial \xi}{\partial t},$$

$$-\frac{\partial \psi}{\partial x} = \frac{\partial \eta}{\partial t}.$$

Write $x+\xi$ for x, and $y+\eta$ for y, where we suppose x and y to be independent of t. We treat ξ and η as small quantities, and calculate them by successive approximation.* Now ξ is only small in the beginning of motion, since the second approximation involves the factor t. But $\partial\xi/\partial t$, $\partial\eta/\partial t$ are always small. Hence we calculate these for the beginning of the motion; but the same form holds when t is great, and we calculate ξ by integration. We are concerned only with the part of ξ which is non-periodic. It will be found that there is a resultant average horizontal velocity of

$$\begin{aligned} U = &-pk\beta^2 e^{2ky+2at} \\ &+ k^2\sqrt{(\tfrac{1}{2}p\nu)}\,\beta^2[4(\cos\mu y+\sin\mu y)\,e^{(k+\lambda)y}+\sin 2ky]\,e^{2at} \\ &- k^3\nu\beta^2[4\sin\mu y\,e^{(k+\lambda)y}+3e^{2\lambda y}]\,e^{2at}, \end{aligned}$$

excluding terms of a higher order in ν.

The velocity of the surface drift is

$$u_0 = [-p+2k\sqrt{(2p\nu)}-3\nu k^2]\,k\beta^2 e^{2at}.$$

The total horizontal displacement before the wave dies down is

$$X = [-p+2k\sqrt{(2p\nu)}-3\nu k^2]\beta^2/4k\nu.$$

The total flux across a vertical plane of unit breadth is

$$Q = -p\beta^2/8k^2\nu,$$

as far as the order ν^0. The expression obtained by Stokes is

$$u_0 = -kp\beta^2,$$

agreeing with the above when $\nu = 0$.

* Cf. Stokes, *Math. and Physical Papers*, Vol. I., p. 207.

The numerical values of these quantities for water are given in the table below. For water $\nu = \cdot0109$ at 17° C. C.g.s. units are used.

Wave-length.	1 cm.	10	100	1000
u/β^2	493	15·6	·5	·02
$u_0/\beta^2 e^{\alpha t}$	388	15	·5	·02
X/β^2	225	873	2864	9063
Q/β^2	22·8	721	22806	721200

u is the velocity of the surface drift given by Stokes,

β is approximately the initial amplitude,

β is not necessarily small, but small compared with the wave-length,

λ is the wave-length in centimetres,

X is the displacement of a particle along the surface,

Q is the flux in cubic centimetres.

For example, if a train of waves 33 feet in wave-length, and 4 inches in height, could be set up, a particle on the surface would travel a distance of 5 miles before the waves died down. For these waves the modulus of decay is 321 hours, so that $4\frac{1}{4}$ miles would be covered in the first 321 hours of the decaying motion.

The Influence of Capillarity on a Train of Waves of Finite Amplitude.

6. When capillarity is neglected, the motion to a third order approximation is found to be contained in the formula

$$\psi/c = y - \beta e^{ky} \cos kx,$$

where, to this order, $c^2 = g(1+k^2\beta^2)/k$.*

If we wish to proceed to a third order approximation, and to include the effect of surface tension, we have to write

$$\psi/c = y - \beta e^{ky} \cos kx - \gamma e^{2ky} \cos 2kx - \delta e^{3ky} \cos 3kx,$$

in which it is evident that γ depends on β^2, and δ on β^3. To this order the wave profile is

$$\eta = \tfrac{1}{2}k\beta^2 + \beta\{1 + \tfrac{9}{8}k^2\beta^2 + \tfrac{3}{2}k\gamma\} \cos kx + (\tfrac{1}{2}k\beta^2 + \gamma) \cos 2kx + (\tfrac{3}{8}k^2\beta^2 + \tfrac{3}{2}k\beta\gamma + \delta) \cos 3kx.$$

* See Lamb, *Hydrodynamics*, 3rd edition, Art. 246.

The pressure condition at the free surface is that

$$p+T_1\frac{d^2y}{dx^2}=\text{constant}\ (y=\eta),$$

or, writing $$T_1/\rho=T',$$

it is $$p/\rho+T'\frac{d^2y}{dx^2}=\text{constant}.$$

We obtain the following equations to determine γ, δ, c in terms of β:

$$(g+T'k^2)(1+\tfrac{9}{8}k^2\beta^2+\tfrac{3}{2}k\gamma)-\tfrac{1}{8}kc^2(8+k^2\beta^2+4k\gamma)=0,$$

$$(g+4T'k^2)(\tfrac{1}{2}k\beta^2+\gamma)-\tfrac{1}{2}kc^2(4\gamma+k\beta^2)=0,$$

$$(g+9T'k^2)(\delta+\tfrac{3}{2}k\beta\gamma+\tfrac{3}{8}k^2\beta^3)-\tfrac{1}{8}kc^2(24\delta+20k\beta\gamma+3k^2\beta^3)=0.$$

From these we derive

$$\gamma=\{3T'k^3/2\,(g-2k^2T')\}\,\beta^2,$$

$$\delta=-[3T'k^4\,(g+7T'k^2)\,\beta^3]/\{4\,(g-2k^2T')(g-3k^2T')\},$$

$$kc^2=(g+T'k^2)\,\{1+k^2\beta^2+k\gamma\}.$$

We notice that the approximation breaks down when the wave-length is such that the velocity approaches the velocity of waves of small amplitude of one-half and one-third the wave-length. In the case of water the approximations would break down for wave-lengths in the neighbourhood of 3 to 4 cms.

The results may be expressed in general terms as follows. When the wave-length is great, k is small, and $k\gamma$ can be neglected compared to $k^2\beta^2$, hence to the second order the wave profile is unaffected by capillarity; the velocity of propagation is given by

$$kc^2=(g+T'k^2)(1+k^2\beta^2),$$

instead of $$kc^2=g\,(1+k^2\beta^2).$$

When the wave-length is small, k is large, and γ is approximately $-\frac{3}{4}k\beta^2$. The wave profile is

$$\eta=\tfrac{1}{2}k\beta^2+\beta\cos kx-\tfrac{1}{4}k\beta^2\cos 2kx+\delta\cos 3kx,$$

instead of $\eta=\frac{1}{2}k\beta^2+\beta\,(1+\frac{9}{8}k^2\beta^2)\cos kx+\frac{1}{2}k\beta^2\cos 2kx+\frac{3}{8}k^2\beta^3\cos 3kx,$

in the absence of capillarity.

Hence the amplitude of the secondary wave instead of being $\frac{1}{2}k\beta^2$ is $-\frac{1}{4}k\beta^2$. Thus the amplitude of this part of the wave is reduced one-half,

and the wave as a whole has a deeper trough than crest. The velocity in this case is given by

$$kc^2 = (g+T'k^2)\{1+\tfrac{1}{4}k^2\beta^2\}.$$

To obtain the minimum wave-velocity we have to approximately solve

$$\frac{dc^2}{dk} = 0.$$

We know that a first approximation is

$$k^2 = g/T'.$$

Substituting this in the terms of higher order, we have

$$k^2 = g/(T'+4g\beta^2).$$

Hence the wave-length which gives the minimum wave-velocity is increased. From this value of the wave-length we obtain the minimum wave-velocity

$$2\sqrt{(gT')}\{1-g\beta^2/2T'\}.$$

instead of

$$2\sqrt{(gT')}.$$

The Influence of Capillarity on the Solitary Wave.

7. The method given by Lord Rayleigh is very well suited for the consideration of the influence of surface tension on the wave, and no attempt has been made to modify any other.

The problem is treated as one of steady motion, which is derived from the formula

$$\phi+i\psi = e^{iy\,d/dx}F(x),*$$

where $F(x)$ is real.

At the free surface $yF'-y^3F'''/3!-\ldots = ch,$

if c be the velocity of the stream, and h the undisturbed depth of the water. We approximate to a solution of this on the supposition that the vertical velocity is everywhere small. As a first approximation

$$F' = \frac{ch}{y},$$

* Cf. Lamb, *Hydrodynamics*, 3rd edition, Art. 248.

which gives $$F' = ch\left\{\frac{1}{y} + \frac{y^2}{6}\left(\frac{1}{y}\right)''\right\}.$$

The pressure condition along the free surface is

$$u^2+v^2 = c^2-2g(y-h)+2T'\frac{d^2y}{dx^2},$$

or $$F'^2-y^2F'F'''+y^2F''^2\ldots = \rho^2-2g(y-h)+2T'\frac{d^2y}{dx^2}.$$

This becomes, on substitution,

$$\frac{1}{y^2}-\tfrac{2}{3}y\left(\frac{1}{y}\right)''+y^2\left(\frac{1}{y}\right)'^2 = \frac{1}{h^2}-\frac{2g(y-h)}{c^2h^2}+\frac{2T'}{c^2h^2}\frac{d^2y}{dx^2},$$

or $$\frac{1}{y^2}+\tfrac{2}{3}\frac{y''}{y}-\tfrac{1}{3}\frac{y'^2}{y^2} = \frac{1}{h^2}-\frac{2g(y-h)}{c^2h^2}+\frac{2T'}{c^2h^2}\frac{d^2y}{dx^2}.$$

Multiply up by y' and integrate

$$-\frac{1}{y}+\tfrac{1}{3}\frac{y'^2}{y} = -\frac{1}{h}+\frac{y-h}{h^2}-\frac{g(y-h)^2}{c^2h^2}+\frac{T'}{c^2h^2}y'^2;$$

therefore $$y'^2\left\{\tfrac{1}{3}-\frac{T'}{c^2h^2}y\right\} = \frac{(y-h)^2}{h^2}\left(1-\frac{gy}{c^2}\right).$$

Write $$y-h = \eta,$$

then $$\eta'^2(\alpha-\eta) = \eta^2(\gamma-\eta)/\beta^2, \qquad (22)$$

where $$\alpha = \tfrac{1}{3}\frac{c^2h^2}{T'}-h,$$

$$\beta^2 = T'/g,$$

$$\gamma = c^2/g-h.$$

8. Our method of approximation makes it clear that η'^2 must not be large in any part of the wave. This would seem to imply that $(\alpha-\eta)$ must not be small in any part of the wave from equation (22). In the first place, therefore, we shall take it that $(\alpha-\eta)$ does not vanish for any part of the wave. Our results fall into two classes. If $(\alpha-\eta)$ be positive throughout the wave, η has a maximum value given by

$$\eta = \gamma = c^2/g,$$

and the wave can be one of elevation only. Let a be this elevation, then

$$c^2 = g(h+a).$$

If $(\alpha-\eta)$ be negative throughout the wave, η has a minimum value given by

$$\gamma = \eta = c^2/g,$$

and the wave can be one of depression only. Let a be the depression, then

$$c^2 = g(h-a).$$

We easily find that $(\alpha-\eta)$ will be positive throughout the wave if $h^2 > 3T'/g$. For water, the condition is that $h > \frac{1}{2}$ cm. (approximately). If $h < \frac{1}{2}$ cm., we have $(\alpha-\eta)$ negative throughout the wave.

Hence the possibility of waves of depression under certain circumstances has been demonstrated. If we could proceed to a higher approximation it could probably be shown that waves of depression could exist at all times, as well as waves of elevation, but that their "wave-length" would be short compared with that of the corresponding waves of elevation. And under the circumstances in which waves of depression only can exist in the present case, waves of elevation of very short wave-length could exist also.

In fact, if we take the particular value for h, which is the case of failure above,

$$h^2 = 3T'/g,$$

the value of η which makes $\alpha-\eta = 0$ also makes $\gamma-\eta = 0$. Thus in reality there is no case of failure, and the equation (22) is valid at all times. With this value of h waves of depression and of elevation are both possible, and the wave-length is independent of the amplitude, which is a partial verification of the statement above.

9. The integral of equation (22) is

$$\log\{\sqrt{(\alpha-\eta)}+\sqrt{(\gamma-\eta)}\} - \sqrt{\frac{\alpha}{\gamma}}\log\left[\left\{\sqrt{\{\gamma(\alpha-\eta)\}}+\sqrt{\{\alpha(\gamma-\eta)\}}\right\}\Big/\sqrt{(\alpha\gamma\eta)}\right] = \pm x/2\beta + C.$$

Let $x = 0$ be under the crest, or trough, then C is determined by

$$\eta = \frac{c^2}{g} - h = \eta_0,$$

when $x = 0$. The "length of the wave" may be defined as the distance between the two points of the wave at which the elevation (or depression) is one-tenth of the maximum. When the depth h is very great, capillarity

has no effect on the length of the wave. When h is very small the length of the wave of depression approaches a limit 6·15 cms. for the ratio $a/h = \cdot 1$, and a limit 2·42 cms. for $a/h = \cdot 5$.

A table exhibiting the influence of capillarity on the wave-length is appended.

a	h	·1	·3	1	10	100
·1h	L	6·02	4·87	12·3	139·1	1393
	L_0	1·39	4·18	13·9	139·3	1393
·5h	L	2·38	·74	6·6	72·69	727
	L_0	·73	2·18	7·3	72·72	727

L_0 is the wave-length excluding the effects of capillarity.

[*Note added February* 13*th*, 1909.]

I have omitted the hypothetical calculation for the surface displacement when air is in contact with the water. It is assumed that the air does not affect the type of vibration, but only the modulus of decay; this is quite reasonable since $\rho'/\rho = \cdot 00129$, and $\nu'/\nu = 12 \cdot 7$. Hence

$$U = -pk\beta^2 e^{2iky + 2\alpha' t},$$

where α' is given on p. 399, *Proc. London Math. Soc.*, Ser. 2, Vol. 6. We find that X/β^2 has the values 734, 1209, 1035* corresponding to wave-lengths 10, 100, 1000 cms.

With this assumption when the wave-length λ is large X varies as $\lambda^{-\frac{1}{2}}$, and hence the displacement is zero alike for very short and *very long* waves.

The displacement in the example on p. 116 would be 1150 yards in this case, instead of 5 miles.

* Cf. p. 116.

ON THE THEORY OF WAVES PROPAGATED VERTICALLY IN THE ATMOSPHERE

By PROF. HORACE LAMB.

[Received December 6th, 1908.—Read December 10th, 1908.]

THIS question has been treated by Poisson* and Lord Rayleigh.† The more definite results so far obtained relate to simple-harmonic vibrations; they presuppose, moreover, isothermal conditions, both as to the equilibrium state and as to the variations of density which constitute the waves. I have attempted to carry the matter a little further. Beginning with the case of an isothermal atmosphere, but assuming the oscillations of density to follow the adiabatic law, I examine the propagation of an arbitrary disturbance. The effect of viscosity is also discussed. Finally, some calculations are given relating to an atmosphere which has a uniform gradient of temperature (diminishing upwards), and is therefore of finite height.

Owing to the indefinite increase of amplitude as the waves travel upwards, which (as will appear) viscosity is not able altogether to check, the results are not in all respects to be interpreted too literally. The investigation may, however, have an independent interest as a study of wave-propagation in a variable medium under conditions which are not artificially imagined, but are such as naturally present themselves. One unexpected result may be mentioned. It appears that an unlimited atmosphere may possess a definite natural period of vibration, in the sense that an impressed local periodic *force* of this (but of no other) period would generate an oscillation of continually increasing amplitude. The case is, however, not wholly analogous to that of the free vibrations of a finite dynamical system, for the order of the infinity is different, and the exaggerated amplitude is not produced by an enforced local vibration of prescribed amplitude, even if this have exactly the period in question.

---

* "Mémoire sur la théorie du son," *Journal de l'École Polytechnique*, T. VII. (1807).

† "On Vibrations of an Atmosphere," *Phil. Mag.* (4), Vol. XXIX., p. 173 (1890); *Sc. Papers*, Vol. III., p. 335.

1. Let the axis of x be drawn vertically upwards, and let ξ denote the vertical displacement at time t of the plane of particles whose undisturbed position is x, Let p and ρ be the corresponding values of the pressure and density, the equilibrium values being denoted by p_0 and ρ_0. These latter quantities are subject to the statical relation

$$\frac{\partial p_0}{\partial x} = -g\rho_0. \tag{1}$$

The dynamical equation is

$$\rho_0 \frac{\partial^2 \xi}{\partial t^2} = -\frac{\partial p}{\partial x} - g\rho_0 = -\frac{\partial}{\partial x}(p - p_0); \tag{2}$$

and the equation of continuity is

$$\rho\left(1 + \frac{\partial \xi}{\partial x}\right) = \rho_0. \tag{3}$$

If we ignore conduction and radiation of heat, p and ρ are connected by the "adiabatic" relation

$$\frac{p}{p_0} = \left(\frac{\rho}{\rho_0}\right)^\gamma, \tag{4}$$

where γ denotes the ratio of the two specific heats. Hence, to the first order,

$$p - p_0 = -\gamma p_0 \frac{\partial \xi}{\partial x}. \tag{5}$$

Substituting in (2), we find

$$\frac{\partial^2 \xi}{\partial t^2} = c^2 \frac{\partial^2 \xi}{\partial x^2} - \gamma g \frac{\partial \xi}{\partial x}, \tag{6}$$

provided

$$c^2 = \gamma \frac{p_0}{\rho_0}, \tag{7}$$

i.e., c denotes the (usually variable) velocity of sound corresponding to the properties of the medium at the plane x. If H denote the height of the "homogeneous atmosphere" corresponding to the temperature at this plane, we have

$$c^2 = \gamma g H. \tag{8}$$

2. Let us suppose, in the first place, that the equilibrium temperature is uniform. Then H and c are constants, and

$$\rho_0 = Ce^{-x/H}. \tag{9}$$

It is convenient to take $2H$ as unit of length, and to adjust the unit of

time so that $c = 1$. On this convention we have

$$\rho_0 = Ce^{-2x} \tag{10}$$

and

$$\frac{\partial^2 \xi}{\partial t^2} = \frac{\partial^2 \xi}{\partial x^2} - 2\frac{\partial \xi}{\partial x}. \tag{11}$$

If we write

$$\xi = ue^x, \tag{12}$$

this becomes

$$\frac{\partial^2 u}{\partial t^2} = \frac{\partial^2 u}{\partial x^2} - u. \tag{13}$$

3. In the case of simple-harmonic vibrations, the time-factor being (say) $e^{i\sigma t}$, we have, if $\sigma^2 > 1$,

$$u = Ae^{i\sigma t + i\sqrt{(\sigma^2-1)}x} + Be^{i\sigma t - i\sqrt{(\sigma^2-1)}x}. \tag{14}*$$

It is natural to interpret the first and second terms as representing wave-systems which are propagated downwards and upwards respectively. This will be confirmed presently by direct calculation of the effect of a given simple-harmonic source of disturbance.

When $\sigma^2 < 1$, we have

$$u = \{Ae^{\sqrt{(1-\sigma^2)}x} + Be^{-\sqrt{(1-\sigma^2)}x}\}\, e^{i\sigma t}. \tag{15}*$$

Here also it will appear that each term represents a standing vibration such as would ultimately be established in consequence of the continued action of a simple-harmonic source, and that the two terms will apply respectively to the regions below and above the source.

Adopting, by anticipation, this view, we infer that the disturbance due to a prescribed vibration

$$\xi = e^{i\sigma t} \tag{16}$$

maintained at the plane $x = 0$ will be given by

$$\xi = e^x . e^{i[\sigma t \mp \sqrt{(\sigma^2-1)}x]}, \quad [\sigma^2 > 1] \tag{17}$$

or

$$\xi = e^{[1 \mp \sqrt{(1-\sigma^2)}]x} . e^{i\sigma t}, \quad [\sigma^2 < 1], \tag{18}$$

where the upper or lower sign is to be taken according as $x \gtrless 0$.

Again the disturbance due to a periodic *force* $e^{i\sigma t}$ concentrated on an infinitely thin stratum at $x = 0$ is found to be

$$\xi = -\frac{i}{2\sqrt{(\sigma^2-1)}}\, e^x . e^{i[\sigma t \mp \sqrt{(\sigma^2-1)}x]}, \quad [\sigma^2 > 1] \tag{19}$$

or

$$\xi = \frac{1}{2\sqrt{(1-\sigma^2)}}\, e^{[1 \mp \sqrt{(1-\sigma^2)}]x} . e^{i\sigma t}, \quad [\sigma^2 < 1], \tag{20}$$

---

* Cf. Lord Rayleigh, *loc. cit.*

provided the density at $x = 0$ be taken as the unit of density. To verify this we remark that, in terms of our present units, the formula (5) becomes

$$p - p_0 = -e^{-2x}\frac{\partial \xi}{\partial x}. \tag{21}$$

The formulæ (19) and (20) accordingly give, for the difference of pressure on the two sides of the plane $x = 0$, the value $e^{i\sigma t}$. It will be noticed that the amplitudes given by (19) and (20) increase indefinitely as σ approaches the critical value unity. In general units the critical value of σ is $c/2H$ and the corresponding period is $4\pi H/c$. For air at ordinary temperatures this is (very roughly) about 5 minutes.

4. To find the free motion consequent on arbitrary initial conditions we start with the typical solution*

$$u = \left\{A(k)\cos\sqrt{(k^2+1)}\,t + B(k)\frac{\sin\sqrt{(k^2+1)}\,t}{\sqrt{(k^2+1)}}\right\} e^{ikx} \tag{22}$$

of the equation (13). This makes

$$u = A(k), \qquad \frac{\partial u}{\partial t} = B(k), \quad [t = 0]. \tag{23}$$

Generalizing by Fourier's theorem, we have

$$u = \int_{-\infty}^{\infty} A(k)\cos\sqrt{(k^2+1)}\,t\,.\,e^{ikx}\,dk + \int_{-\infty}^{\infty} B(k)\frac{\sin\sqrt{(k^2+1)}\,t}{\sqrt{(k^2+1)}}\,e^{ikx}\,dx, \tag{24}$$

where $$A(k) = \frac{1}{2\pi}\int_{-\infty}^{\infty} f(\alpha)e^{-ik\alpha}\,d\alpha, \qquad B(k) = \frac{1}{2\pi}\int_{-\infty}^{\infty} F(\alpha)e^{-ik\alpha}\,d\alpha. \tag{25}$$

This satisfies (13) and makes

$$u = f(x), \qquad \frac{\partial u}{\partial t} = F(x), \quad [t = 0]. \tag{26}$$

As an example, let us suppose that there is no initial displacement, but that an initial momentum is concentrated in the neighbourhood of the plane $x = 0$. We have then $f(x) = 0$, whilst $F(x)$ is sensible only for infinitesimal values of x, for which it becomes infinite in such a way that

$$\int_{-\infty}^{\infty} F(\alpha)\,d\alpha = 1, \tag{27}$$

say. If the density at the plane $x = 0$ be taken as the unit of density, this makes the impressed momentum to be unity (per unit area of the

* The method is similar to that adopted by Poincaré in the case of the "équation des télégraphistes"; see his *Théorie analytique de la propagation de la chaleur*, chap. viii.

plane). Hence $A(k) = 0$, $B(k) = 1/2\pi$; and

$$u = \frac{1}{2\pi} \int_{-\infty}^{\infty} e^{ikx} \frac{\sin \sqrt{(k^2+1)}\, t}{\sqrt{(k^2+1)}}\, dk. \tag{28}$$

This integral can be evaluated. It is found* that

$$u = \begin{cases} 0, & [t^2 < x^2] \\ \frac{1}{2} J_0\{\sqrt{(t^2-x^2)}\}, & [t^2 > x^2] \end{cases}. \tag{29}$$

The disturbance does not reach the position x until after the lapse of a time $t = \pm x$, and the subsequent displacement is given by

$$\xi = \tfrac{1}{2} e^x J_0\{\sqrt{(t^2-x^2)}\} \tag{30}$$

or, in terms of general units,

$$\xi = \frac{1}{2\sqrt{(\rho_0 \rho_0')}}\, J_0\left\{\frac{\sqrt{(c^2t^2-x^2)}}{2H}\right\}, \tag{31}$$

where ρ_0 is the density at the position x, and ρ_0' the density at the place ($x = 0$) where the unit impulse was applied. The structure of this formula is in accordance with a well known law of reciprocity.† It will be observed that the displacement ξ at any point does not remain constant after the wave has passed it, as it would in the case of a uniform medium, but fluctuates in sign with a continually decreasing amplitude. There is, moreover, a tendency to a definite periodicity in these fluctuations; viz., the period tends to the limit 2π, or $4\pi H/c$ in general units. This remark will help to explain the somewhat curious result pointed out at the end of § 3.

The verification of the conservation of momentum in this problem may be noticed. Consider the linear moment (Σmx), with respect to the plane $x = 0$, of the mass of air included between the upper and lower boundaries of the wave-system. As compared with the equilibrium state, this has been increased by

$$\int_{-t}^{t} \rho_0 \xi\, dx = \tfrac{1}{2} \int_{-t}^{t} e^{-x} J_0\{\sqrt{(t^2-x^2)}\}\, dx = \int_0^t \cosh x\, J_0\{\sqrt{(t^2-x^2)}\}\, dx. \tag{32}$$

It is shewn in § 11 below that this definite integral is equal to t. Differentiating, we verify that the total momentum is unity.

---

* See § 11 below.

† See *Proc. London Math. Soc.*, (1), Vol. XIX., p. 144.

5. From (29) we can derive the effect of a succession of impulses delivered at the plane $x = 0$. Thus, if a prescribed force $e^{i\sigma t}$ be concentrated on an infinitely thin stratum in this position, we have

$$u = \tfrac{1}{2}\int_{-\infty}^{t-|x|} J_0[\sqrt{\{(t-\tau)^2-x^2\}}]\, e^{i\sigma\tau}\, d\tau$$

$$= \tfrac{1}{2}e^{i\sigma t}\int_{|x|}^{\infty} J_0\{\sqrt{(\omega^2-x^2)}\}\, e^{-i\sigma\omega}\, d\omega. \tag{33}$$

This assumes different forms according as $\sigma^2 \gtrless 1$. If $\sigma^2 > 1$, we find *

$$u = -\frac{i}{2\sqrt{(\sigma^2-1)}}\, e^{i\sigma t \mp i\sqrt{(\sigma^2-1)}\,x}, \tag{34}$$

whilst, if $\sigma^2 < 1$, $$u = \frac{1}{2\sqrt{(1-\sigma^2)}}\, e^{i\sigma t \mp \sqrt{(1-\sigma^2)}\,x}, \tag{35}$$

the upper or lower sign being taken according as x is positive or negative. Cf. § 3 *ante*.

In the critical case of $\sigma^2 = 1$, we have $u = \infty$. A force having the period $4\pi H/c$ produces a cumulative effect, owing to the natural tendency to fluctuation of this period (see § 3).

6. The general solution of the equation (13) which is contained in the formulæ (24) and (25) may now be put in a simpler form. Thus, corresponding to an initial state in which

$$u = 0, \qquad \frac{\partial u}{\partial t} = F(x), \quad [t = 0], \tag{36}$$

we have $$u = \tfrac{1}{2}\int_{x-t}^{x+t} F(\alpha)\, J_0[\sqrt{\{t^2-(x-\alpha)^2\}}]\, d\alpha\ ; \tag{37}$$

or, if the initial conditions be given in the form

$$\xi = 0, \qquad \frac{\partial \xi}{\partial t} = \phi(x), \quad [t = 0], \tag{38}$$

$$\xi = \tfrac{1}{2}\int_{-t}^{t} e^{-\omega}\, \phi(x+\omega)\, J_0\{\sqrt{(t^2-\omega^2)}\}\, d\omega. \tag{39}$$

From this the solution corresponding to

$$\xi = \chi(x), \qquad \frac{\partial \xi}{\partial t} = 0, \quad [t = 0], \tag{40}$$

* The definite integral in (33) is evaluated in § 11 below.

is derived by Stokes' rule* ; viz., it is

$$\xi = \tfrac{1}{2}e^{-t}\chi(x+t)+\tfrac{1}{2}e^{t}\chi(x-t) + \tfrac{1}{2}t\int_{-t}^{t} e^{-\omega}\chi(x+\omega)\,J_0'\{\sqrt{(t^2-\omega^2)}\}\,\frac{d\omega}{\sqrt{(t^2-\omega^2)}}. \tag{41}$$

7. The formulæ indicate an unlimited increase of amplitude as a disturbance travels upwards, as is indeed required by the principle of energy.† This increase impairs to some extent the practical value of our results, which are based on the hypothesis that the dilatation $\partial\xi/\partial x$ is small. It has been suggested, however, that viscosity must have a compensating influence, since the "kinematic coefficient" (usually denoted by μ/ρ) increases indefinitely as ρ diminishes, μ itself being independent of the density.

There is no difficulty in obtaining a formal solution in which viscosity‡ is taken into account, but in the interpretation we encounter nearly all the specially intricate points that arise in the theory of hypergeometric functions. The dynamical equation takes the form

$$\frac{\partial^2\xi}{\partial t^2} = c^2\left(\frac{\partial^2\xi}{\partial x^2}-\frac{1}{H}\frac{\partial\xi}{\partial x}\right)+\frac{\mu}{\rho}\frac{\partial^3\xi}{\partial x^2\partial t}, \tag{42}$$

where μ is a coefficient of friction.§ In the case of simple-harmonic motion ($e^{i\sigma t}$) we have

$$\frac{\partial^2\xi}{\partial x^2}-\frac{1}{H}\frac{\partial\xi}{\partial x}+\frac{\sigma^2}{c^2}\xi+\frac{i\mu\sigma}{\rho c^2}\frac{\partial^2\xi}{\partial x^2}=0. \tag{43}$$

If we put

$$\rho_1 = \frac{\sigma\mu}{c^2}, \tag{44}$$

and transform to ρ as independent variable, we find, in virtue of (9),

$$\rho^2\frac{\partial^2\xi}{\partial\rho^2}+2\rho\frac{\partial\xi}{\partial\rho}+\frac{\sigma^2H^2}{c^2}\xi+i\rho_1\left(\rho\frac{\partial^2\xi}{\partial\rho^2}+\frac{\partial\xi}{\partial\rho}\right)=0. \tag{45}$$

This is a particular case of the differential equation of the hypergeometric

* See Rayleigh, *Theory of Sound*, § 95.

† Rayleigh, *loc. cit.* p. 122 *ante*.

‡ For consistency we ought also to include the effects of heat conduction, which are of the same order of magnitude. The analysis would be much more difficult, the differential equation (43) being replaced by one of the fourth order [cf. the author's *Hydrodynamics*, 3rd ed., § 343, equation (29)]. It does not appear likely, however, that the general character of the results would be greatly modified.

§ To conform to the usual notation it would be necessary to write $\frac{4}{3}\mu$ for μ. The zero suffix hitherto attached to ρ is omitted throughout the present section, as no confusion is likely to be caused.

function, viz., if we write $$z = i\frac{\rho}{\rho_1}, \tag{46}$$

we have $$z(1-z)\frac{\partial^2\xi}{\partial z^2} + \{\gamma-(\alpha+\beta+1)z\}\frac{\partial\xi}{\partial z} - \alpha\beta\xi = 0, \tag{47}$$

provided $$\gamma = 1, \quad \alpha+\beta = 1, \quad \alpha\beta = \frac{\sigma^2H^2}{c^2}. \tag{48}$$

These conditions make $$\left.\begin{matrix}\alpha\\ \beta\end{matrix}\right\} = \tfrac{1}{2} \pm i\sqrt{\left(\frac{\sigma^2H^2}{c^2} - \tfrac{1}{4}\right)} \tag{49}$$

or $$\left.\begin{matrix}\alpha\\ \beta\end{matrix}\right\} = \tfrac{1}{2} \pm \sqrt{\left(\tfrac{1}{4} - \frac{\sigma^2H^2}{c^2}\right)}, \tag{50}$$

according as $\sigma \gtrless 2c/H$.

It is to be noticed that the quantity ρ_1, defined by (44), will usually be exceedingly small compared with the density of the air at sea-level (say ·00129). For the purpose of a rough estimate we may put

$$c = 33240, \qquad \mu = \tfrac{4}{3}\times\cdot000172 \quad [\text{c.g.s.}];$$

this gives $$\rho_1 = 2\cdot08\times10^{-13}.\sigma,$$

where σ, which determines the frequency of the vibration, is supposed expressed in radians per second. Also

$$H = \frac{(33240)^2}{1.40\times981} = 8\cdot04\times10^5.$$

Hence the height at which the density ρ_1 would be met with in the isothermal atmosphere is

$$2\cdot3026\,H\log_{10}\frac{\cdot00129}{\rho_1} = 1\cdot85\times(9\cdot79-\log_{10}\sigma)\times10^6$$

centimetres. For a frequency of 100 this is about 130 kilometres.

Hence for all but very great altitudes we shall have $|z| > 1$, and the appropriate solution of (43), under the conditions (48), is*

$$\xi = Az^{-\alpha}F\left(\alpha, \alpha, 2\alpha, \frac{1}{z}\right) + Bz^{-\beta}F\left(\beta, \beta, 2\beta, \frac{1}{z}\right). \tag{51}$$

When ρ is sufficiently great, the hypergeometric series may be replaced by their first terms. In this case we have, inserting the time-factor and

* Forsyth, *Differential Equations*, §§ 120, 121.

modifying the arbitrary constants,

$$\xi = e^{x/2H}\left\{A'e^{i\sigma t+i\sqrt{(\sigma^2/c^2-1/4H^2)}x}+B'e^{i\sigma t-i\sqrt{(\sigma^2/c^2-1/4H^2)}x}\right\} \tag{52}$$

or

$$\xi = e^{x/2H}\left\{A'e^{\sqrt{(1/4H^2-\sigma^2/c^2)}x}+B'e^{-\sqrt{(1/4H^2-\sigma^2/c^2)}x}\right\}e^{i\sigma t}, \tag{53}$$

according as $\sigma \gtrless c/2H$. This is equivalent to the known solution when viscosity is ignored (§ 3). When σ is large compared with $c/2H$, the series in (51) may begin by converging very slowly; but by imagining the atmosphere to be continued downwards, we shall at length attain conditions under which the approximate formula (52) is applicable. For the comparatively slow vibrations for which $\sigma < c/2H$, the formula (53) will apply without any such qualification.

The approximation may be continued so as to show the effect of viscosity on rapid vibrations such that $\sigma H/2c$ is large. We have, then, if $|z|$ be large,

$$F\left(\alpha, \alpha, 2\alpha, \frac{1}{z}\right) = e^{\alpha/2z}, \qquad F\left(\beta, \beta, 2\beta, \frac{1}{z}\right) = e^{\beta/2z}, \tag{54}$$

nearly. On reference to (49) we find

$$\left.\begin{matrix}\alpha/2z\\ \beta/2z\end{matrix}\right\} = \pm\frac{\sigma^2\mu H}{2c^3\rho} \tag{55}$$

approximately. Hence the main effect of viscosity will be to introduce factors $e^{\pm\lambda/\rho}$ into the first and second terms of (52) respectively, where

$$\lambda = \frac{\sigma^2\mu H}{2c^3} = \frac{\sigma H}{2c}\rho_1. \tag{56}$$

This shews the damping effect on the waves as they travel downwards and upwards to regions where ρ is greater and less respectively. It may be shewn that the result here obtained is in harmony with the known theory for a homogeneous medium.*

It is of interest to trace, qualitatively at least, the fate of a wave-system as it ascends into the upper regions of our assumed isothermal atmosphere, where the influence of viscosity continually increases. When $|z| < 1$ an appropriate solution of the general equation (47) is

$$\xi = CF(\alpha, \beta, \gamma, z)+Dz^{1-\gamma}F(1+\alpha-\gamma, 1+\beta-\gamma, 2-\gamma, z). \tag{57}$$

The relations between the arbitrary constants in different solutions of the hypergeometric equation, when α, β, γ, z all admit of complex values, have been carefully investigated by Dr. E. W. Barnes in a recent paper.†

* *Hydrodynamics*, § 342.

† *Proc. London Math. Soc.*, Ser. 2, Vol. 6, p. 152 (1907).

In the present problem the matter is complicated by the fact that the third element (γ) in the hypergeometric functions is equal to unity, and that the form (57) accordingly requires modification. Dr. Barnes has kindly communicated to me the formula which is suitable for the immediate purpose, viz.,

$$\frac{\{\Gamma(\beta)\}^2}{\Gamma(2\beta)}(-z)^{-\beta}F\left(\beta, \beta, 2\beta, \frac{1}{z}\right)$$

$$= -\log(-z)F(\beta, 1-\beta, 1, z)$$

$$-\frac{\sin\pi\beta}{\pi}\Sigma_{n=0}^{n=\infty}\frac{\Gamma(\beta+n)\Gamma(1-\beta+n)}{\{\Gamma(1+n)\}^2}\{\psi(\beta+n)+\psi(\beta-n)-2\psi(1+n)\}z^n, \tag{58}$$

provided the argument of $-z$ lie between $\pm\pi$. Thus, referring to (46), we have

$$(-z)^{-\beta} = \left(\frac{\rho}{\rho_1}\right)^{-\beta}e^{\frac{1}{2}i\pi\beta}, \quad \log(-z) = \log\frac{\rho}{\rho_1} - \tfrac{1}{2}i\pi. \tag{59}$$

The sign of equality in (58) is used in the sense that the functions on the two sides, which exist only in distinct regions of the plane of the complex variable z, viz., those which lie on the outside and the inside, respectively, of the circle $|z| = 1$, are the analytical continuations of one another. We will now suppose that on the left-hand side $|z|$ is large, and that on the right-hand $|z|$ is small, and will keep only the most important term in each case. If x_1 be the height at which the density ρ_1 is found, we have, by (9),

$$\frac{\rho}{\rho_1} = e^{(x_1-x)/H}, \tag{60}$$

and the approximate formula accordingly takes the shape

$$\frac{\{\Gamma(\beta)\}^2}{\Gamma(2\beta)}e^{-\beta(x_1-x)/H+\frac{1}{2}i\pi\beta} = \frac{x-x_1}{H}, \tag{61}$$

where the equality is to be understood in the same conventional sense as before. This shews that the effect of viscosity is to substitute ultimately a linear for an exponential law of increase of amplitude with height.

In the case of the more rapid vibrations, β is complex of the form $\frac{1}{2}-i\omega$, where

$$\omega = \sqrt{\left(\frac{\sigma^2H^2}{c^2} - \tfrac{1}{4}\right)}, \tag{62}$$

and the left-hand side of (61) takes the form

$$\frac{\{\Gamma(\beta)\}^2}{\Gamma(2\beta)}e^{(x-x_1)/2H-i\omega(x-x_1)/H+\frac{1}{2}\pi\omega+\frac{1}{2}\pi i}. \tag{63}$$

Hence, neglecting mere differences of phase, we find that the ascending wave-system which, when ρ/ρ_1 is large, is represented by

$$\xi = e^{x/2H} \cdot e^{i\sigma t - i\sqrt{(\sigma^2/c^2 - 1/4H^2)}x}, \tag{64}$$

ultimately assumes the form of a standing vibration :

$$\xi = \frac{\Gamma(2\beta)}{\{\Gamma(\beta)\}^2} e^{x_1/2H} \cdot e^{-\frac{1}{2}\pi\omega} \frac{x - x_1}{H} e^{i\sigma t}. \tag{65}$$

When $\sigma H/2c$ is large, I find*

$$\left| \frac{\Gamma(2\beta)}{\{\Gamma(\beta)\}^2} \right| = \sqrt{\left(\frac{\sigma H}{\pi c}\right)}, \tag{66}$$

approximately. Under this condition the wave-system

$$\xi = \frac{1}{\sqrt{\rho}} e^{i\sigma t - i\sqrt{(\sigma^2/c^2 - 1/4H^2)}x} \tag{67}$$

assumes ultimately the form

$$\xi = \sqrt{\left(\frac{\sigma H}{\pi c \rho_1}\right)} e^{-\pi\sigma H/2c} \frac{x - x_1}{H} e^{i\sigma t}, \tag{68}$$

or, taking account of (44),

$$\xi = \sqrt{\left(\frac{Hc}{\pi\mu}\right)} e^{-\pi\sigma H/2c} \frac{x - x_1}{H} e^{i\sigma t}. \tag{69}$$

As before, a difference of phase is here neglected.

Although the amplitude of ξ increases indefinitely with x, the validity of our dynamical equation (42) depends rather on the smallness of $\partial\xi/\partial x$. The ratio of the amplitude of the dilatation given by (68) to that given by (67) is

$$\sqrt{\left(\frac{\rho}{\rho_1} \cdot \frac{c}{\pi\sigma H}\right)} e^{-\pi\sigma H/2c}, \tag{70}$$

where ρ is the density in the stage to which (67) refers. For sufficiently great frequencies this ratio is very small.

The mean rate at which energy is transmitted across any horizontal plane is, by (5), equal to the average value of

$$-\gamma p_0 \frac{\partial\xi}{\partial x} \frac{\partial\xi}{\partial t}.\dagger$$

---

* This result is based on a formula (due to Pincherle) given by Nielsen, *Theorie der Gammafunktion*, p. 97.

† The symbol γ henceforth resumes its former meaning of the ratio of the two specific heats.

To apply this we must take the real parts of our expressions for ξ. As far as the approximation in (69) goes this leads to a zero result. It appears on reference to (58) that for a further approximation we must multiply the right-hand side of (69) by

$$1+\alpha\beta\frac{i\rho}{\rho_1} \quad \text{or} \quad 1+\frac{\sigma^2H^2}{c^2}ie^{(x_1-x)/H}.$$

Allowing for this, I find that the rate of transmission of energy in the upper region, to which (68) applies, bears to that in the lower region, where (67) obtains, the ratio

$$\frac{\sigma^2H^2}{\pi c^2}e^{-\pi\sigma H/c}\left\{\frac{\rho}{\rho_1}\log\frac{\rho_1}{\rho}\right\}^2, \tag{71}$$

where ρ now denotes the density in the upper region.

It is hardly worth while to discuss in detail the case of the slow vibrations for which $\sigma < c/2H$, and β is consequently real. As might be anticipated, the influence of viscosity is then very slight.

8. We will now suppose that the temperature, instead of being uniform, diminishes upwards with a uniform gradient. This implies an upper boundary to the atmosphere, and it is convenient to take the origin in this boundary and to measure x downwards. Accordingly, if θ_0 be the equilibrium temperature (absolute), we write

$$\theta_0 = \beta x, \tag{72}$$

where β is the constant temperature gradient. Since p_0, ρ_0, θ_0 are connected by the relation

$$p_0 = R\rho_0\theta_0, \tag{73}$$

we have $$\frac{1}{\rho_0}\frac{d\rho_0}{dx}=\frac{1}{\rho_0}\frac{dp_0}{dx}-\frac{1}{\theta_0}\frac{d\theta_0}{dx}=\frac{g\rho_0}{p_0}-\frac{\beta}{\theta_0}=\frac{n}{x},$$

provided $$n=\frac{g}{R\beta}-1. \tag{74}$$

Hence $$\rho_0 \propto x^n, \qquad p_0 \propto x^{n+1}. \tag{75}$$

In the case of an atmosphere in "convective equilibrium," we have

$$\beta=\frac{\gamma-1}{\gamma}\frac{g}{R}, \qquad n=\frac{1}{\gamma-1}, \tag{76}$$

where γ (as before) is the ratio of the two specific heats. If $\beta = g/R$, we

have $n = 0$, and the density is uniform. This condition, however, like all others in which n has a smaller value than that given by (76), would become unstable if the restriction to vertical motion were abandoned.

If we reverse the sign of x in (6), we have

$$\frac{\partial^2 \xi}{\partial t^2} = c^2 \frac{\partial^2 \xi}{\partial x^2} + \gamma g \frac{\partial \xi}{\partial x}, \tag{77}$$

where

$$c^2 = \frac{\gamma p_0}{\rho_0} = \gamma R \beta x. \tag{78}$$

Now let us write

$$\tau = \int_0^x \frac{dx}{c} = \sqrt{\left(\frac{4x}{\gamma R \beta}\right)}, \qquad x = \tfrac{1}{4}\gamma R \beta \tau^2, \tag{79}$$

so that τ denotes the time which a point moving always with the local velocity of sound would take to travel from the top of the atmosphere to the position x. If in (77) we replace x as independent variable by τ, we get

$$\frac{\partial^2 \xi}{\partial t^2} = \frac{\partial^2 \xi}{\partial \tau^2} + \frac{2n+1}{\tau} \frac{\partial \xi}{\partial \tau}, \tag{80}$$

where n has the value given in (74).

9. In the case of simple-harmonic vibrations ($e^{i\sigma t}$), we have

$$\frac{\partial^2 \xi}{\partial \tau^2} + \frac{2n+1}{\tau} \frac{\partial \xi}{\partial \tau} + \sigma^2 \xi = 0, \tag{81}$$

the solution of which is

$$\xi = \tau^{-n} \{ A J_n(\sigma\tau) + B J_{-n}(\sigma\tau) \}. \tag{82}$$

It appears from (79) that

$$p - p_0 \propto p_0 \frac{\partial \xi}{\partial x} \propto \tau^{2n+1} \frac{\partial \xi}{\partial \tau}; \tag{83}$$

and in order that this may tend to the limit 0 for $x = 0$ we must have $B = 0$.

The solution corresponding to a vibration

$$\xi = e^{i\sigma t}, \tag{84}$$

maintained at the plane for which $\tau = \tau_1$, is

$$\xi = \left(\frac{\tau_1}{\tau}\right)^n \frac{J_n(\sigma\tau)}{J_n(\sigma\tau_1)} e^{i\sigma t}. \tag{85}$$

For large values of $\sigma\tau$ we have

$$\xi \propto \frac{1}{\tau^{n+\frac{1}{2}}} \cos(\sigma\tau - \tfrac{1}{4}\pi - \tfrac{1}{2}n\pi)\, e^{i\sigma t}. \tag{86}$$

Hence (85) represents a standing oscillation due to superposition of two wave-trains of equal amplitude, travelling upwards and downwards respectively. If Δx, $\Delta\tau$ be the changes in x and τ corresponding to a wave-length (λ), we have

$$\lambda = \Delta x = \tfrac{1}{2}\gamma R\beta\tau . \Delta\tau = \tfrac{1}{2}\gamma R\beta\tau \frac{2\pi}{\sigma} = \frac{2\pi}{\sigma} c, \tag{87}$$

as we should expect.

The expression (85) becomes infinite when

$$J_n(\sigma\tau_1) = 0. \tag{88}$$

This determines the periods $2\pi/\sigma$ of free oscillation of the air lying above a fixed rigid horizontal plane for which $\tau = \tau_1$.

10. To examine the effect of arbitrary initial conditions, we begin with the typical solution

$$\xi = \left\{ A(k)\cos kt + B(k)\frac{\sin kt}{k} \right\} \tau^{-n} J_n(k\tau), \tag{89}$$

and have recourse to the theorem*

$$f(\tau) = \int_0^\infty J_n(k\tau)\, k\, dk \int_0^\infty f(a)\, J_n(ka)\, a\, da. \tag{90}$$

The general solution of (81) corresponding to

$$\xi = \chi(\tau), \qquad \frac{\partial\xi}{\partial t} = \phi(\tau), \quad [t = 0], \tag{91}$$

is accordingly

$$\xi = \tau^{-n} \int_0^\infty A(k)\, J_n(k\tau) \cos kt\, k\, dk + \tau^{-n} \int_0^\infty B(k)\, J_n(k\tau) \sin kt\, dk, \tag{92}$$

where $$A(k) = \int_0^\infty \chi(a)\, J_n(ka)\, a^{n+1}\, da, \quad B(k) = \int_0^\infty \phi(a)\, J_n(ka)\, a^{n+1}\, da. \tag{93}$$

As a particular case, suppose that initially the medium is at rest, and that a given finite momentum is suddenly imparted to an infinitely thin

* Gray and Mathews, *Treatise on Bessel Functions*, p. 86 ; Nielsen, *Handbuch d. Cylinderfunktionen*, p. 369.

stratum for which $\tau = \tau_1$. We have, then,

$$A(k) = 0, \qquad B(k) = \tau_1^n J_n(k\tau_1) \int_0^\infty \phi(\alpha)\, \alpha\, d\alpha.$$

On reference to (75), (79) and (91) it appears that, if we omit constant factors independent of τ_1, we may write

$$B(k) = \tau_1^{-n} J_n(k\tau_1), \tag{94}$$

whence

$$\xi = \frac{1}{(\tau\tau_1)^n} \int_0^\infty J_n(k\tau)\, J_n(k\tau_1) \sin kt\, dk. \tag{95}$$

This gives the displacement at time t at the plane τ, due to a given impulse delivered at time 0 at the plane τ_1. It will be noticed that the law of reciprocity is again verified.

When n is zero or a positive integer the discussion of the equation (95) is fairly simple. By the addition theorem of Bessel's functions we have, in this case,

$$J_n(k\tau)\, J_n(k\tau_1) = \frac{1}{\pi} \int_0^\pi J_0 \{k\sqrt{(\tau^2+\tau_1^2-2\tau\tau_1 \cos\omega)}\} \cos n\omega\, d\omega. \tag{96}$$

If we write for a moment

$$q^2 = \tau^2+\tau_1^2-2\tau\tau_1 \cos\omega, \tag{97}$$

we have*

$$\int_0^\infty J_0(kq) \sin kt\, dk = \left\{ \begin{array}{ll} 0, & [t^2 < q^2] \\ \dfrac{1}{\sqrt{(t^2-q^2)}}, & [t^2 > q^2] \end{array} \right\}. \tag{98}$$

Hence, for $t^2 > (\tau-\tau_1)^2$, we have

$$\xi = 0. \tag{99}$$

For $(\tau+\tau_1)^2 > t^2 > (\tau-\tau_1)^2$, we have

$$\xi = \frac{1}{\pi(\tau\tau_1)^n} \int_0^{\cos^{-1}\mu} \frac{\cos n\omega\, d\omega}{\sqrt{(t^2-\tau^2-\tau_1^2+2\tau\tau_1 \cos\omega)}}, \tag{100}$$

where

$$\mu = \frac{\tau^2+\tau_1^2-t^2}{2\tau\tau_1}; \tag{101}$$

or

$$\xi = \frac{1}{\pi\sqrt{2}\,(\tau\tau_1)^{n+\frac{1}{2}}} \int_0^{\cos^{-1}\mu} \frac{\cos n\omega\, d\omega}{\sqrt{(\cos\omega-\mu)}} = \frac{1}{2\,(\tau\tau_1)^{n+\frac{1}{2}}} P_{n-\frac{1}{2}}(\mu), \tag{102}$$

---

* Gray and Mathews, p. 73; Nielsen, p. 195. The formula is due to H. Weber.

where P denotes the generalized Legendre function.* For $t^2 > (\tau+\tau_1)^2$,

$$\xi = \frac{1}{\pi(\tau\tau_1)^n}\int_0^\pi \frac{\cos n\omega\, d\omega}{\sqrt{(t^2-\tau^2-\tau_1^2+2\tau\tau_1\cos\omega)}}. \tag{103}$$

These formulæ give the history of what happens at any particular plane τ. The wave-fronts travel, upwards and downwards, always with the local velocity of sound, so that, as indicated by (99), no effect is produced so long as $t < |\tau-\tau_1|$. The formula (100) relates to the interval between the first transit of the wave-front and the arrival of the wave-front which, after travelling upwards, has undergone reflection at the upper boundary of the atmosphere. Finally, the formula (103) gives the history subsequent to the transit of the reflected wave.

In the particular case of $n = 0$, which corresponds to uniform density,† the results take a somewhat simpler form. For $(\tau+\tau_1)^2 > t^2 > (\tau-\tau_1)^2$, we find

$$\xi = \frac{1}{\pi\sqrt{(\tau\tau_1)}}F_1(\kappa), \tag{104}$$

in the notation of elliptic integrals, the modulus (κ) being defined by

$$\kappa^2 = \frac{t^2-(\tau-\tau_1)^2}{4\tau\tau_1}. \tag{105}$$

Again, for $t^2 > (\tau+\tau_1)^2$,

$$\xi = \frac{1}{\pi\sqrt{(\tau\tau_1)}}F_1(\kappa'), \tag{106}$$

provided
$$\kappa'^2 = \frac{4\tau\tau_1}{t^2-(\tau-\tau_1)^2}, \qquad 1-\kappa'^2 = \frac{t^2-(\tau+\tau_1)^2}{t^2-(\tau-\tau_1)^2}. \tag{107}$$

For the reduction of the definite integral in (95) in the general case, when n is not zero or a positive integer, I have had recourse to the kindness of Prof. H. M. Macdonald. It appears from his calculations‡ that

$$\xi = 0, \quad [t^2 < (\tau-\tau_1)^2], \tag{108}$$

$$\xi = \frac{1}{2(\tau\tau_1)^{n+\frac{1}{2}}}P_{n-\frac{1}{2}}(\mu), \quad [(\tau+\tau_1)^2 > t^2 > (\tau-\tau_1)^2], \tag{109}$$

$$\xi = \frac{\cos n\pi}{\pi}\frac{1}{(\tau\tau_1)^{n+\frac{1}{2}}}Q_{n-\frac{1}{2}}(-\mu), \quad [t^2 > (\tau+\tau_1)^2], \tag{110}$$

---

* Hobson, *Phil. Trans.*, A., 1896, p. 510.

† This is only mentioned for the sake of the analytical results, the equilibrium being really unstable, as already remarked.

‡ See the note following this paper.

where $$\mu = \frac{\tau^2+\tau_1^2-t^2}{2\tau\tau_1}, \tag{111}$$

as before. When n is half an odd integer the formula (110) makes $\xi = 0$, shewing that the medium remains at rest after the passage of the reflected wave-front. It may be remarked that the case of an atmosphere in "convective equilibrium" comes almost exactly under this; for if we put $\gamma = 1{\cdot}4$, we have $n = \frac{5}{2}$, by (76).

Prof. Macdonald has also examined the transitions between the several stages to which the formulæ (108), (109), and (110) respectively relate. It appears that immediately after the first transit of the wave-front, when $t^2-(\tau-\tau_1)^2$ is small and positive, we have

$$\xi = \frac{1}{2(\tau\tau_1)^{n+\frac{1}{2}}}, \tag{112}$$

approximately. Near the time of transit of the reflected wave-front, when $(\tau+\tau_1)^2-t^2$ is small, we have

$$\xi = -\frac{\cos n\pi}{4\pi}\frac{1}{(\tau\tau_1)^{n+\frac{1}{2}}}\log\{(\tau+\tau_1)^2-t^2\}^2, \tag{113}$$

approximately. This result is to be modified if $n-\frac{1}{2}$ is integral. When $(\tau+\tau_1)^2-t^2$ is small and positive, we have, in this case,

$$\xi = \frac{\sin n\pi}{2(\tau\tau_1)^{n+\frac{1}{2}}}, \tag{114}$$

nearly; whilst for $t^2 > (\tau+\tau_1)^2$ we have $\xi = 0$. In any case the logarithmic infinity indicated by (113) does not present any difficulty. It arises entirely from our artificial hypothesis of a finite momentum concentrated initially in an infinitely thin stratum. If the same momentum were diffused over a stratum of finite thickness, the infinity would disappear.

11. I give here the evaluation of some other definite integrals employed in this paper.

(1) As regards the formula (28), we have

$$\int_{-\infty}^{\infty} e^{ikx}\frac{\sin\sqrt{(k^2+1)}\,t}{\sqrt{(k^2+1)}}\,dk = 2\int_0^{\infty}\cos(x\sinh\omega)\sin(t\cosh\omega)\,d\omega$$

$$= \int_{-\infty}^{\infty}\sin(t\cosh\omega+x\sinh\omega)\,d\omega. \tag{115}$$

If $t^2 > x^2$, we write

$$t = \sqrt{(t^2-x^2)}\cosh\beta, \quad x = \sqrt{(t^2-x^2)}\sinh\beta, \quad \omega+\beta = \omega',$$

and obtain $\int_{-\infty}^{\infty} \sin\{\sqrt{(t^2-x^2)}\cosh\omega'\}\,d\omega'$ or $\pi J_0\{\sqrt{(t^2-x^2)}\}$,

by Mehler's well-known formula.* On the other hand, if $t^2 < x^2$, we put

$$t = \sqrt{(x^2-t^2)}\sinh\beta, \quad x = \pm\sqrt{(x^2-t^2)}\cosh\beta, \quad \omega \pm \beta = \omega',$$

and obtain $\int_{-\infty}^{\infty} \sin\{\sqrt{(x^2-t^2)}\sinh\omega'\}\,d\omega'$,

which obviously vanishes. Hence

$$\int_{-\infty}^{\infty} e^{ikx}\frac{\sin\sqrt{(k^2+1)}\,t}{\sqrt{(k^2+1)}}dk = \left\{\begin{matrix} \pi J_0\{\sqrt{(t^2-x^2)}\}, & [t^2 > x^2] \\ 0, & [t^2 < x^2]\end{matrix}\right\}. \quad (116)$$

(2) The reduction of the integral in § 5 is facilitated by a knowledge of the result, as inferred from § 3. If in Fourier's formula

$$f(\sigma) = \frac{2}{\pi}\int_0^{\infty} \sin k\sigma\,dk \int_0^{\infty} f(a)\sin ka\,da, \quad (117)$$

we put $$f(\sigma) = \left\{\begin{matrix} \dfrac{\cos\sqrt{(\sigma^2-1)}\,x}{\sqrt{(\sigma^2-1)}}, & [\sigma^2 > 1] \\ 0, & [\sigma^2 < 1]\end{matrix}\right\}, \quad (118)$$

we have $$f(\sigma) = \frac{2}{\pi}\int_0^{\infty} \sin k\sigma\,dk \int_1^{\infty} \sin ka\cos\sqrt{(a^2-1)}x\,\frac{da}{\sqrt{(a^2-1}}$$

$$= \frac{2}{\pi}\int_0^{\infty} \sin k\sigma\,dk \int_0^{\infty} \sin(k\cosh\omega)\cos(x\sinh\omega)\,d\omega. \quad (119)$$

As in the case of (115), the second integral is equal to

$$\tfrac{1}{2}\pi J_0\{\sqrt{(k^2-x^2)}\} \quad \text{or} \quad 0,$$

according as $k^2 \gtrless x^2$. Hence†

$$\int_{|x|}^{\infty} \sin k\sigma J_0\{\sqrt{(k^2-x^2)}\}\,dk = \left\{\begin{matrix} \dfrac{\cos\sqrt{(\sigma^2-1)}\,x}{\sqrt{(\sigma^2-1)}}, & [\sigma^2 > 1] \\ 0, & [\sigma^2 < 1]\end{matrix}\right\}. \quad (120)$$

* Gray and Mathews, p. 228; Nielsen, p. 223.

† This result is included in a general formula due to Sonine, *Math. Ann.*, Bd. XVI., p. 38 (1879). The above proof, in which I have been assisted by a hint from Mr. H. Bateman, is, however, quite different.

Again, in the formula

$$f(\sigma) = \frac{2}{\pi}\int_0^\infty \cos k\sigma\, dk \int_0^\infty f(\alpha)\cos k\alpha\, d\alpha \tag{121}$$

put

$$f(\sigma) = \left\{\begin{array}{ll} 0, & [\sigma^2 > 1] \\ \dfrac{\cosh\sqrt{(1-\sigma^2)}\,x}{\sqrt{(1-\sigma^2)}}, & [\sigma^2 < 1] \end{array}\right\}. \tag{122}$$

We have $f(\sigma) = \dfrac{2}{\pi}\displaystyle\int_0^\infty \cos k\sigma\, dk \int_0^1 \cos k\alpha \cosh\sqrt{(1-\alpha^2)}\,x\, \frac{d\alpha}{\sqrt{(1-\alpha^2)}}$

$$= \frac{2}{\pi}\int_0^\infty \cos k\sigma\, dk \int_0^{\frac{1}{2}\pi} \cos(k\sin\theta)\cosh(x\cos\theta)\, d\theta. \tag{123}$$

By actual multiplication of the series for $\cos(k\sin\theta)$ and $\cosh(x\cos\theta)$, and subsequent integration, we find

$$\int_0^{\frac{1}{2}\pi} \cos(k\sin\theta)\cosh(x\cos\theta)\, d\theta = \tfrac{1}{2}\pi J_0\{\sqrt{(k^2-x^2)}\} = \tfrac{1}{2}\pi I_0\{\sqrt{(x^2-k^2)}\}. \tag{124}$$

Hence

$$f(\sigma) = \int_{|x|}^\infty \cos k\sigma J_0\{\sqrt{(k^2-x^2)}\}\, dk + \int_0^{|x|} \cos k\sigma I_0\{\sqrt{(x^2-k^2)}\}\, dk$$

$$= \int_{|x|}^\infty \cos k\sigma J_0\{\sqrt{(k^2-x^2)}\}\, dk + |x| \int_0^{\frac{1}{2}\pi} \cos(\sigma x\sin\theta)\, I_0(x\cos\theta)\cos\theta\, d\theta. \tag{125}$$

As in the case of (123), the second integral can be found by expansion, viz.,

$$\int_0^{\frac{1}{2}\pi} \cos(\sigma x\sin\theta)\, I_0(x\cos\theta)\cos\theta\, d\theta = \frac{\sin\sqrt{(\sigma^2-1)}\,x}{\sqrt{(\sigma^2-1)}\,x} = \frac{\sinh\sqrt{(1-\sigma^2)}\,x}{\sqrt{(1-\sigma^2)}\,x}. \tag{126}$$

Hence

$$\int_{|x|}^\infty \cos k\sigma J_0\{\sqrt{(k^2-x^2)}\}\, dk = \left\{\begin{array}{ll} -\dfrac{\sin\sqrt{(\sigma^2-1)}\,|x|}{\sqrt{(\sigma^2-1)}}, & [\sigma^2 > 1] \\ \dfrac{e^{-\sqrt{(1-\sigma^2)}\,|x|}}{\sqrt{(1-\sigma^2)}}, & [\sigma^2 < 1] \end{array}\right\}. \tag{127}$$

The results (117) and (124) combine into the single formula

$$\int_{|x|}^\infty e^{ik\sigma} J_0\{\sqrt{(k^2-x^2)}\}\, dk = \left\{\begin{array}{l} \dfrac{ie^{i\sqrt{(\sigma^2-1)}\,|x|}}{\sqrt{(\sigma^2-1)}}, \ [\sigma^2 > 1] \\ \dfrac{e^{-\sqrt{(1-\sigma^2)}\,|x|}}{\sqrt{(1-\sigma^2)}}, \ [\sigma^2 < 1] \end{array}\right\}. \tag{128}$$

(3) As regards the integral in (32), we have

$$\int_0^t \cosh x J_0\{\sqrt{(t^2-x^2)}\}\, dx = t\int_0^{\frac{1}{2}\pi} \cosh(t\cos\theta) J_0(t\sin\theta)\sin\theta\, d\theta. \quad (129)$$

By actual expansion, or otherwise,* we find

$$\cosh(t\cos\theta) J_0(t\sin\theta) = 1+\frac{t^2}{2!}P_2(\cos\theta)+\frac{t^4}{4!}P_4(\cos\theta)+\ldots, \quad (130)$$

whence

$$\int_0^t \cosh x J_0\{\sqrt{(t^2-x^2)}\}\, dx = t. \quad (131)$$

POSTSCRIPT (*added March 6th*, 1909).—It should be remarked that most of the analysis of this paper applies also to the lateral vibrations of a chain hanging vertically. If the axis of x be drawn upwards, the deflection y satisfies the equation

$$\rho\frac{\partial^2 y}{\partial t^2} = \frac{\partial}{\partial x}\left(T\frac{\partial y}{\partial x}\right), \quad (132)$$

where T denotes the tension and ρ the line-density. Since $\partial T/\partial x = g\rho$, we have

$$\frac{\partial^2 y}{\partial t^2} = c^2\frac{\partial^2 y}{\partial x^2}+g\frac{\partial y}{\partial x}, \quad (133)$$

where $c^2 = T/\rho$. This corresponds to (77). If ρ varies as x^n, where x denotes distance above the lower end, this becomes

$$\frac{\partial^2 y}{\partial t^2} = \frac{g}{n+1}\left\{x\frac{\partial^2 y}{\partial x^2}+(n+1)\frac{\partial y}{\partial x}\right\}, \quad (134)$$

or, if

$$\tau = \int_0^x \frac{dx}{c} = 2\sqrt{\left\{\frac{(n+1)x}{g}\right\}}, \quad (135)$$

$$\frac{\partial^2 y}{\partial t^2} = \frac{\partial^2 y}{\partial \tau^2}+\frac{(2n+1)}{\tau}\frac{\partial y}{\partial \tau}. \quad (136)$$

This is identical with (80), and the calculation of the effect of a local impulse follows exactly the same course as in § 10 above. In the case of a uniform chain we have $n = 0$, and the results are expressed by formulæ (99), (104), (106).

We might also investigate in a similar manner the progress of water waves due to a local disturbance in a canal whose bottom has a uniform slope.†

* See Hobson, *Proc. London Math. Soc.*, Vol. xxv., p. 66 (1893).

† Cf. *Hydrodynamics*, 3rd ed., §§ 183, 184.

NOTE ON THE EVALUATION OF A CERTAIN INTEGRAL CONTAINING BESSEL'S FUNCTIONS

By H. M. MACDONALD.

[Received December 6th, 1908.—Read January 14th, 1909.]

A PARTICULAR case of the following integral occurs in Prof. H. Lamb's paper "On the Theory of Waves propagated vertically in the Atmosphere" (p. 136 *supra*) :—

$$\int_0^\infty J_n(ax)\,J_n(bx)\,J_m(cx)\,x^{1-m}\,dx.$$

Writing
$$W=\int_0^\infty J_n(ax)\,J_n(bx)\,J_m(cx)\,x^{1-m}\,dx$$
and using the relation
$$J_m(cx)=\frac{1}{2\pi\iota}\,c^m x^m\int_{\gamma-\infty\,\iota}^{\gamma+\infty\,\iota} e^{\frac{1}{2}t-c^2x^2/2t}\,t^{-m-1}\,dt,$$
where γ is a real positive quantity and $m>-1$, it follows that
$$W=\frac{1}{2\pi\iota}\,c^m\int_0^\infty\int_{\gamma-\infty\,\iota}^{\gamma+\infty\,\iota} e^{\frac{1}{2}t-c^2x^2/2t}\,J_n(ax)\,J_n(bx)\,x\,t^{-m-1}\,dx\,dt,$$
whence, $n>-1$,
$$W=\frac{1}{2\pi\iota}\,c^{m-2}\int_{\gamma-\infty\,\iota}^{\gamma+\infty\,\iota} e^{\frac{1}{2}t-(a^2+b^2)\,t/2c^2}\,I_n(abt/c^2)\,t^{-m}\,dt,$$
or
$$W=\frac{1}{2\pi\iota}\,a^{m-1}b^{m-1}c^{-m}\int_{\gamma-\infty\,\iota}^{\gamma+\infty\,\iota} e^{(c^2-a^2-b^2)\,t/2c^2}\,I_n(t)\,t^{-m}\,dt.$$
When $c^2-a^2-b^2>2ab$, writing $c^2-a^2-b^2=2ab\mu$,
$$\frac{1}{2\pi\iota}\int_{\gamma-\infty\,\iota}^{\gamma+\infty\,\iota} e^{\mu t}\,I_n(t)\,t^{-m}\,dt=\sqrt{\frac{2}{\pi}}\,\frac{\sin(m-n)\pi}{\pi}\,e^{(m-\frac{1}{2})\pi\iota}\,(\mu^2-1)^{\frac{1}{4}(2m-1)}\,Q^{\frac{1}{2}-m}_{n-\frac{1}{2}}(\mu)\,*;$$
therefore, when $c^2>(a+b)^2$, $m>-1$, $n>-1$,
$$W=a^{m-1}b^{m-1}c^{-m}\sqrt{\frac{2}{\pi}}\,\frac{\sin(m-n)\pi}{\pi}\,e^{(m-\frac{1}{2})\pi\iota}\,(\mu^2-1)^{\frac{1}{4}(2m-1)}\,Q^{\frac{1}{2}-m}_{n-\frac{1}{2}}(\mu),$$
where
$$\mu=(c^2-a^2-b^2)/2ab.$$

* Macdonald, *Proc. London Math. Soc.*, Vol. xxxv., p. 436.

It remains to evaluate W when $(a+b)^2 > c^2$, for this purpose using the relation

$$I_n(t) = \frac{1}{\sqrt{(2\pi)}}\, t^l \int_{-1}^{1} e^{t\nu}\,(1-\nu^2)^{\frac{1}{4}(2l-1)}\, P^{\frac{1}{2}-l}_{n-\frac{1}{2}}(\nu)\, d\nu,*$$

where $n-l$ is an integer greater than -1.

$$W = \frac{1}{2\pi\iota}\, a^{m-1} b^{m-1} c^{-m} \times \frac{1}{\sqrt{(2\pi)}} \int_{\gamma-\infty\iota}^{\gamma+\infty\iota} \int_{-1}^{1} e^{(c^2-a^2-b^2+2ab\nu)\,t/2ab}\,(1-\nu^2)^{\frac{1}{4}(2l-1)}\, P^{\frac{1}{2}-l}_{n-\frac{1}{2}}(\nu)\, t^{l-m}\, d\nu\, dt,$$

where l is chosen less than m. Now

$$\frac{1}{2\pi\iota} \int_{\gamma-\infty\iota}^{\gamma+\infty\iota} e^{\kappa t}\, t^{l-m}\, dt \quad [m > l]$$

vanishes when κ is negative, and has the value $\kappa^{m-l-1}/\Pi(m-l-1)$ when κ is positive; therefore, when $(a-b)^2 > c^2$, $W = 0$ and, when

$$(a+b)^2 > c^2 > (a-b)^2,$$

$$W = a^{m-1} b^{m-1} c^{-m}\, \frac{1}{\sqrt{(2\pi)}}\, \frac{1}{\Pi(m-l-1)} \int_{\mu}^{1} (\nu-\mu)^{m-l-1}\,(1-\nu^2)^{\frac{1}{4}(2l-1)}\, P^{\frac{1}{2}-l}_{n-\frac{1}{2}}(\nu)\, d\nu,$$

where $\mu = (a^2+b^2-c^2)/2ab$, and, using the relation

$$P^{\frac{1}{2}-l}_{n-\frac{1}{2}}(\nu) = \frac{1}{\Pi(l-\frac{1}{2})} \left(\frac{1+\nu}{1-\nu}\right)^{\frac{1}{4}(1-2l)} F\left[-n+\tfrac{1}{2},\ n+\tfrac{1}{2},\ l+\tfrac{1}{2},\ \tfrac{1}{2}(1-\nu)\right],$$

$$W = a^{m-1} b^{m-1} c^{-m}\, \frac{1}{\sqrt{(2\pi)}}\, \frac{1}{\Pi(m-l-1)\,\Pi(l-\frac{1}{2})} \times \int_{\mu}^{1} (\nu-\mu)^{m-l-1}\,(1-\nu)^{l-\frac{1}{2}}\, F\left[-n+\tfrac{1}{2},\ n+\tfrac{1}{2},\ l+\tfrac{1}{2},\ \tfrac{1}{2}(1-\nu)\right] d\nu,$$

that is,

$$W = a^{m-1} b^{m-1} c^{-m}\, \frac{1}{\sqrt{(2\pi)}}\, \frac{1}{\Pi(m-l-1)\,\Pi(-n-\frac{1}{2})\,\Pi(n-\frac{1}{2})} \times \sum_{0}^{\infty} \frac{\Pi(r-n-\frac{1}{2})\,\Pi(r+n-\frac{1}{2})}{\Pi(l+r-\frac{1}{2})\,\Pi(r)}\, 2^{-r} \int_{\mu}^{1} (\nu-\mu)^{m-l-1}\,(1-\nu)^{l+r-\frac{1}{2}}\, d\nu.$$

Making the substitution $\nu-\mu = (1-\mu)\xi$,

$$\int_{\mu}^{1} (\nu-\mu)^{m-l-1}\,(1-\nu)^{l+r-\frac{1}{2}}\, d\nu = (1-\mu)^{m+r-\frac{1}{2}} \int_{0}^{1} \xi^{m-l-1}\,(1-\xi)^{r+l-\frac{1}{2}}\, d\xi,$$

that is, the value of this integral is

$$(1-\mu)^{m+r-\frac{1}{2}}\, \frac{\Pi(m-l-1)\,\Pi(l+r-\frac{1}{2})}{\Pi(m+r-\frac{1}{2})};$$

---

* *Proc. London Math. Soc.*, Vol. xxxv., p. 431.

therefore

$$W = a^{m-1}b^{m-1}c^{-m}$$
$$\times \frac{1}{\sqrt{(2\pi)}} \frac{1}{\Pi(n-\frac{1}{2})\,\Pi(-n-\frac{1}{2})} \sum_0^\infty \frac{\Pi(r+n-\frac{1}{2})\,\Pi(r-n-\frac{1}{2})}{\Pi(r+m-\frac{1}{2})\,\Pi(r)}\, 2^{-r}(1-\mu)^{m+r-\frac{1}{2}}$$

or $$W = a^{m-1}b^{m-1}c^{-m} \frac{1}{\sqrt{(2\pi)}} \frac{(1-\mu)^{m-\frac{1}{2}}}{\Pi(m-\frac{1}{2})} F[-n+\tfrac{1}{2}, n+\tfrac{1}{2}, m+\tfrac{1}{2}, \tfrac{1}{2}(1-\mu)],$$

that is, $$W = \frac{1}{\sqrt{(2\pi)}}\, a^{m-1}b^{m-1}c^{-m}(1-\mu^2)^{\frac{1}{4}(2m-1)} P^{\frac{1}{2}-m}_{n-\frac{1}{2}}(\mu).$$

Collecting the results,

$W = 0 \quad [(a-b)^2 > c^2]$,

$$W = \frac{1}{\sqrt{(2\pi)}}\, a^{m-1}b^{m-1}c^{-m}(1-\mu^2)^{\frac{1}{4}(2m-1)} P^{\frac{1}{2}-m}_{n-\frac{1}{2}}(\mu),$$

where $$\mu = (a^2+b^2-c^2)/2ab \quad [(a+b)^2 > c^2 > (a-b)^2],$$

$$W = a^{m-1}b^{m-1}c^{-m} \sqrt{\frac{2}{\pi}} \frac{\sin(m-n)\pi}{\pi}\, e^{(m-\frac{1}{2})\pi\iota}(\mu^2-1)^{\frac{1}{4}(2m-1)} Q^{\frac{1}{2}-m}_{n-\frac{1}{2}}(\mu),$$

where $$\mu = (c^2-a^2-b^2)/2ab \quad [c^2 > (a+b)^2],$$

and $$n > -1, \qquad m > -\tfrac{1}{2}.$$

When $n-m$ is an integer greater than -1 these results become

$W = 0 \quad [(a-b)^2 > c^2]$,

$$W = \frac{1}{\sqrt{(2\pi)}}\, a^{m-1}b^{m-1}c^{-m}(1-\mu^2)^{\frac{1}{4}(2m-1)} P^{\frac{1}{2}-m}_{n-\frac{1}{2}}(\mu) \quad [(a+b)^2 > c^2 > (a-b)^2],$$

$W = 0 \quad [c^2 > (a+b)^2]$,

where $\mu = (a^2+b^2-c^2)/2ab$, and in this case $P^{\frac{1}{2}-m}_{n-\frac{1}{2}}(\mu)$ can be expressed in finite terms. The result in the particular case when $n = m$ is, remembering that

$$P^{\frac{1}{2}-n}_{n-\frac{1}{2}}(\mu) = \frac{2^{\frac{1}{2}-n}}{\Pi(n-\frac{1}{2})}\,(1-\mu^2)^{\frac{1}{4}(2n-1)},$$

$W = 0 \quad [(a-b)^2 > c^2]$,

$$W = \frac{a^{-m}b^{-m}c^{-m}}{2^{3m-1}\sqrt{\pi}\,\Pi(m-\frac{1}{2})} \{(a+b+c)(a+b-c)(a-b+c)(-a+b+c)\}^{m-\frac{1}{2}}$$
$$[(a+b)^2 > c^2 > (a-b)^2],$$

$W = 0 \quad [c^2 > (a+b)^2]$;

this particular result has been given by Sonine.*

* *Math. Ann.*, Bd. XVI.

When $m = \frac{1}{2}$, remembering that

$$J_{\frac{1}{2}}(cx) = \left(\frac{2}{\pi cx}\right)^{\frac{1}{2}} \sin cx$$

and writing $$V = \int_0^\infty J_n(ax)\, J_n(bx) \sin cx\, dx,$$

the above results become

$$V = 0 \quad [(a-b)^2 > c^2],$$

$$V = \tfrac{1}{2} a^{-\frac{1}{2}} b^{-\frac{1}{2}} P_{n-\frac{1}{2}}(\mu) \qquad [(a+b)^2 > c^2 > (a-b)^2],$$

where $$\mu = (a^2+b^2-c^2)/2ab,$$

$$V = \frac{\cos n\pi}{\pi}\, a^{-\frac{1}{2}} b^{-\frac{1}{2}} Q_{n-\frac{1}{2}}(\mu) \quad [c^2 > (a+b)^2],$$

where $$\mu = (c^2-a^2-b^2)/2ab.$$

When n is half a positive odd integer these results become

$$V = 0 \quad [(a+b)^2 > c^2],$$

$$V = \tfrac{1}{2} a^{-\frac{1}{2}} b^{-\frac{1}{2}} P_{n-\frac{1}{2}}(\mu) \quad [(a+b)^2 > c^2 > (a-b)^2],$$

$$V = 0 \quad [c^2 > (a+b)^2].$$

The various known series for the spherical harmonics enable the values of W or V to be calculated to any degree of accuracy; the values in the neighbourhood of the discontinuities will be given below.

When $c^2-(a-b)^2$ is small and tends to zero, it follows from the series for $P^{\frac{1}{2}-m}_{n-\frac{1}{2}}(\mu)$ in powers of $(1-\mu)$ that W tends to

$$\frac{1}{\sqrt{(2\pi)}}\, a^{m-1} b^{m-1} c^{-m}\, \frac{(1-\mu)^{m-\frac{1}{2}}}{\Pi(m-\frac{1}{2})},$$

that is, to zero when $m > \frac{1}{2}$; also, that V tends to the value $\frac{1}{2} a^{-\frac{1}{2}} b^{-\frac{1}{2}}$ when $c^2-(a-b)^2$ tends to zero. When $(a+b)^2-c^2$ is small μ is nearly equal to -1, and it is convenient to replace $P^{\frac{1}{2}-m}_{n-\frac{1}{2}}(\mu)$ by harmonics of $-\mu$. If $m-\frac{1}{2}$ is not an integer,

$$P^{\frac{1}{2}-m}_{n-\frac{1}{2}}(\mu) = \frac{\cos n\pi}{\cos m\pi}\, P^{\frac{1}{2}-m}_{n-\frac{1}{2}}(-\mu) + \frac{\sin (n-m)\pi}{\cos m\pi}\, \frac{\Pi(n-m)}{\Pi(n+m-1)}\, P^{m-\frac{1}{2}}_{n-\frac{1}{2}}(-\mu),$$

and therefore, when $n-m$ is not an integer, W tends to the value

$$\frac{1}{\sqrt{\pi}}\, 2^{m-1} a^{m-1} b^{m-1} c^{-m}\, \frac{\sin (n-m)\pi}{\cos m\pi}\, \frac{\Pi(n-m)}{\Pi(n+m-1)\,\Pi(\frac{1}{2}-m)},$$

that is, to the value

$$-\frac{1}{\pi\sqrt{\pi}}\, 2^{m-1} a^{m-1} b^{m-1} c^{-m} \sin (n-m)\pi\, \frac{\Pi(n-m)\,\Pi(m-\frac{3}{2})}{\Pi(n+m-1)}.$$

If $m-\frac{1}{2}$ is an integer,

$$P^{\frac{1}{2}-m}_{n-\frac{1}{2}}(\mu) = \cos(n-m)\pi\, P^{\frac{1}{2}-m}_{n-\frac{1}{2}}(-\mu) - \frac{2}{\pi}\sin(n-m)\pi\, Q^{\frac{1}{2}-m}_{n-\frac{1}{2}}(-\mu),$$

and, making use of the appropriate expression for $Q^{\frac{1}{2}-m}_{n-\frac{1}{2}}(-\mu)$,* it follows that, when $n-m$ is not an integer, W tends to the value

$$-\frac{1}{\pi\sqrt{\pi}}\, 2^{m-1} a^{m-1} b^{m-1} c^{-m} \sin(n-m)\pi\, \frac{\Pi(n-m)\,\Pi(m-\frac{3}{2})}{\Pi(n+m-1)},$$

when $m > \frac{1}{2}$.

If $m = \frac{1}{2}$, and $n-\frac{1}{2}$ is not an integer, V tends to the value

$$-\frac{1}{2\pi}\cos n\pi\, a^{-\frac{1}{2}} b^{-\frac{1}{2}} \log\{(a+b)^2-c^2\},$$

when $(a+b)^2-c^2$ tends to zero. If $n-m$ is an integer and $m > \frac{1}{2}$, W tends to zero, when $(a+b)^2-c^2$ tends to zero. If $m = \frac{1}{2}$ and $n-\frac{1}{2}$ is an integer, V tends to the value $\frac{1}{2}\sin n\pi\, a^{-\frac{1}{2}} b^{-\frac{1}{2}}$, when $(a+b)^2-c^2$ tends to zero.

When $c^2 > (a+b)^2$ the expression for W can be replaced by

$$W = \frac{1}{\pi}\, a^{m-1} b^{m-1} c^{-m} 2^{1-m} \sin(m-n)\pi \times \frac{1}{\Pi(m-1)} \int_\eta^\infty e^{-n\zeta} (2\cosh\xi - 2\cosh\eta)^{m-1}\, d\xi,$$

where $$2ab\cosh\eta = c^2-a^2-b^2,$$

and m is positive.

When η tends to zero, this expression, writing $e^{-\zeta} = x$, tends to

$$\frac{1}{\pi}\, a^{m-1} b^{m-1} c^{-m} 2^{1-m} \sin(n-m)\pi\, \frac{1}{\Pi(m-1)} \int_0^1 x^{n-m} (1-x)^{2m-2}\, dx,$$

provided $m > \frac{1}{2}$. Hence, if $m > \frac{1}{2}$, W tends to the value

$$\frac{1}{\pi\sqrt{\pi}}\, 2^{m-1} a^{m-1} b^{m-1} c^{-m} \sin(m-n)\pi\, \frac{\Pi(n-m)\,\Pi(m-\frac{3}{2})}{\Pi(n+m-1)},$$

when $c^2-(a+b)^2$ tends to zero. When $m = \frac{1}{2}$,

$$V = \frac{1}{\pi}\cos n\pi\, a^{-\frac{1}{2}} b^{-\frac{1}{2}} \int_\eta^\infty e^{-n\zeta} (2\cosh\xi - 2\cosh\eta)^{-\frac{1}{2}}\, d\xi,$$

and the limit to which

$$\int_\eta^\infty e^{-n\zeta} (2\cosh\xi - 2\cosh\eta)^{-\frac{1}{2}}\, d\xi$$

* Macdonald, *Proc London Math. Soc.*, Vol. xxxi., p. 276.

tends when η tends to zero is $-\log \eta$; therefore V tends to

$$-\frac{1}{2\pi} a^{-\frac{1}{2}} b^{-\frac{1}{2}} \cos n\pi \log \{c^2-(a+b)^2\},$$

when $c^2-(a+b)^2$ tends to zero.

[*Added January 19th*, 1909.]

The following integral is closely related to the integral investigated above, but differs from it inasmuch as it is continuous for all real values of a, b, c. Writing

$$U = \int_0^\infty J_n(ax)\, J_n(bx)\, K_m(cx)\, x^{m+1}\, dx,$$

and making use of the relation

$$K_m(cx) = \tfrac{1}{2} \int_0^\infty e^{-\frac{1}{2}cx(s+s^{-1})}\, s^{m-1}\, ds,$$

which is equivalent to

$$K_m(cx) = \tfrac{1}{2}(cx)^{-m} \int_0^\infty e^{-\frac{1}{2}s-\frac{1}{2}c^2x^2s^{-1}}\, s^{m-1}\, ds,$$

it follows that

$$U = \tfrac{1}{2}c^{-m} \int_0^\infty \int_0^\infty e^{-\frac{1}{2}s-\frac{1}{2}c^2x^2s^{-1}}\, J_n(ax)\, J_n(bx)\, s^{m-1}\, x\, dx\, ds\,;$$

hence, changing the order of integration and using the relation

$$\int_0^\infty e^{-\frac{1}{2}c^2x^2s^{-1}}\, J_n(ax)\, J_n(bx)\, x\, dx = \frac{s}{c^2}\, e^{-(a^2+b^2)s/2c^2}\, I_n\left(\frac{abs}{c^2}\right),$$

$$U = \tfrac{1}{2}c^{-m-2} \int_0^\infty e^{-\frac{1}{2}s-\frac{1}{2}(a^2+b^2)sc^{-2}}\, I_n\left(\frac{abs}{c^2}\right) s^m\, ds,$$

when $n > -\frac{1}{2}$.

Writing $\qquad a^2+b^2+c^2 = 2ab\mu, \qquad abs = c^2t,$

this becomes $\qquad U = \tfrac{1}{2}c^m(ab)^{-m-1} \int_0^\infty e^{-\mu t}\, I_n(t)\, t^m\, dt,$

that is, $\quad U = \tfrac{1}{2}c^m(ab)^{-m-1} \sum_0^\infty \dfrac{1}{2^{n+2k}\, \Pi(n+k)\, \Pi(k)} \int_0^\infty e^{-\mu t}\, t^{n+m+2k}\, dt\,;$

hence $\quad U = \tfrac{1}{2}c^m(ab)^{-m-1} \sum_0^\infty \dfrac{\Pi(n+m+2k)}{2^{n+2k}\, \Pi(n+k)\, \Pi(k)}\, \dfrac{1}{\mu^{n+m+2k+1}},$

provided that $n+m > -1$, that is,

$$U = \tfrac{1}{2}c^m(ab)^{-m-1} \sum_0^\infty \frac{2^{n+m+2k}\, \Pi\left(\frac{n+m}{2}+k\right)\, \Pi\left(\frac{n+m-1}{2}+k\right)}{2^{n+2k}\, \Pi(n+k)\, \Pi(k)\, \Pi(-\frac{1}{2})\, \mu^{n+m+2k+1}}\,;$$

and therefore

$$U = 2^{m-1}\pi^{-\frac{1}{2}}c^m(ab)^{-m-1}\frac{\Pi\left(\frac{n+m}{2}\right)\Pi\left(\frac{n+m-1}{2}\right)}{\Pi(n)}\frac{1}{\mu^{n+m+1}}$$
$$\times F\left(\frac{n+m+2}{2},\ \frac{n+m+1}{2},\ n+1,\ \frac{1}{\mu^2}\right).$$

Now $$Q_{n-\frac{1}{2}}^{m+\frac{1}{2}}(\mu) = e^{(m+\frac{1}{2})\pi\iota}\frac{\Pi(n+m)\,\Pi(-\frac{1}{2})}{2^{n+\frac{1}{2}}\Pi(n)}\frac{(\mu^2-1)^{\frac{1}{4}(2m+1)}}{\mu^{n+m+1}}$$
$$\times F\left(\frac{n+m+2}{2},\ \frac{n+m+1}{2},\ n+1,\ \frac{1}{\mu^2}\right);$$

therefore

$$U = 2^{n+m-\frac{1}{2}}\pi^{-\frac{1}{2}}c^m(ab)^{-m-1}e^{-(m+\frac{1}{2})\pi\iota}\frac{\Pi\left(\frac{n+m}{2}\right)\Pi\left(\frac{n+m-1}{2}\right)}{\Pi(n+m)\,\Pi(-\frac{1}{2})}$$
$$\times(\mu^2-1)^{-\frac{1}{4}(2m+1)}Q_{n-\frac{1}{2}}^{m+\frac{1}{2}}(\mu);$$

whence $$U = 2^{-\frac{1}{2}}\pi^{-\frac{1}{2}}e^{-(m+\frac{1}{2})\pi\iota}c^m(ab)^{-m-1}(\mu^2-1)^{-\frac{1}{4}(2m+1)}Q_{n-\frac{1}{2}}^{m+\frac{1}{2}}(\mu);$$

and therefore

$$\int_0^\infty J_n(ax)\,J_n(bx)\,K_m(cx)\,x^{m+1}\,dx$$
$$= 2^{-\frac{1}{2}}\pi^{-\frac{1}{2}}e^{-(m+\frac{1}{2})\pi\iota}c^m(ab)^{-m-1}(\mu^2-1)^{-\frac{1}{4}(2m+1)}Q_{n-\frac{1}{2}}^{m+\frac{1}{2}}(\mu),$$

where $$2ab\mu = a^2+b^2+c^2 \quad (n > -\tfrac{1}{2},\ n+m > -1).$$

Remembering that $K_{-m} = K_m$, it follows that

$$\int_0^\infty J_n(ax)\,J_n(bx)\,K_m(cx)\,x^{1-m}\,dx$$
$$= 2^{-\frac{1}{2}}\pi^{-\frac{1}{2}}e^{(m-\frac{1}{2})\pi\iota}c^{-m}(ab)^{m-1}(\mu^2-1)^{\frac{1}{4}(2m-1}\,Q_{n-\frac{1}{2}}^{\frac{1}{2}-m}(\mu),$$

where $$n > -\tfrac{1}{2}, \qquad m < n+1.$$

Substituting $m = -\frac{1}{2}$ in the first result, and writing for $K_{-\frac{1}{2}}(cx)x^{\frac{1}{2}}$, its value $2^{-\frac{1}{2}}\pi^{\frac{1}{2}}c^{-\frac{1}{2}}e^{-cx}$, it becomes

$$\int_0^\infty e^{-cx}J_n(ax)\,J_n(bx)\,dx = \frac{1}{\pi}a^{-\frac{1}{2}}b^{-\frac{1}{2}}Q_{n-\frac{1}{2}}(\mu),$$

a result previously obtained by the writer.*

* *Proc. London Math. Soc.*, Vol. XXVI., pp. 160, 161, 165.

Again, substituting $m = 0$, the first result becomes

$$\int_0^\infty J_n(ax)\, J_n(bx)\, K_0(cx)\, x\, dx = 2^{-\frac{1}{2}} \pi^{-\frac{1}{2}} e^{-\frac{1}{2}n\iota} (ab)^{-1} (\mu^2-1)^{-\frac{1}{4}} Q^{\frac{1}{2}}_{n-\frac{1}{2}}(\mu),$$

that is,
$$\int_0^\infty J_n(ax)\, J_n(bx)\, K_0(cx)\, x\, dx = \frac{1}{2ab \sinh \psi}\, e^{-n\psi},$$

where
$$\cosh \psi = \mu = (a^2+b^2+c^2)/2ab.$$

Substituting in the first result $m = n$, it becomes

$$\int_0^\infty J_n(ax)\, J_n(bx)\, K_n(cx)\, x^{n+1}\, dx$$
$$= 2^{-\frac{1}{2}} \pi^{-\frac{1}{2}} c^n (ab)^{-n-1} e^{-(n+\frac{1}{2})n\iota} (\mu^2-1)^{-\frac{1}{4}(2n+1)} Q^{n+\frac{1}{2}}_{n-\frac{1}{2}}(\mu),$$

that is,

$$\int_0^\infty J_n(ax)\, J_n(bx)\, K_n(cx)\, x^{n+1}\, dx$$
$$= 2^{-\frac{1}{2}} \pi^{-\frac{1}{2}} c^n (ab)^{-n-1} (\mu^2-1)^{-\frac{1}{4}(2n+1)} \frac{\Pi(2n)\, \Pi(-\frac{1}{2})}{2^{n+\frac{1}{2}}\, \Pi(n)} (\mu^2-1)^{-\frac{1}{4}(2n+1)};$$

and therefore

$$\int_0^\infty J_n(ax)\, J_n(bx)\, K_n(cx)\, x^{n+1}\, dx$$
$$= 2^{n-1} \pi^{-\frac{1}{2}}\, \Pi(n-\tfrac{1}{2})\, c^n (ab)^{-n-1} (\mu^2-1)^{-n-\frac{1}{2}} \quad (n > -\tfrac{1}{2}).$$

ON SYSTEMS OF THREE QUATERNARY QUADRICS THAT CAN BE EXPRESSED BY MEANS OF FIVE SQUARES

By A. C. DIXON.

[Received December 9th, 1908.—Read December 10th, 1908.]

THE poristic problem of expressing three quaternary quadrics by means of five squares is discussed by Salmon (*Geometry of Three Dimensions*, 4th ed., pp. 209–10) after Frahm (*Math. Ann.*, T. VII.) and Töplitz (*Math. Ann.*, T. XI.). The last-named shews that the reduction is possible when the three quadrics are polars of one cubic surface. This cubic surface is not unique, nor are the three poles uniquely determined; but the plane of the three poles is shewn by Töplitz to osculate a certain twisted cubic. The object of this note is to prove that the five planes, got by equating to zero the five squares separately, osculate this same cubic.* Methods are given for the reduction to five squares and for the reduction of the quaternary cubic to five cubes.

1. Töplitz's solution is substantially as follows (§§ 1–3). Let U, V, W be the three quadrics. Take any cone belonging to the system

$$\lambda U+\mu V+\nu W = 0,$$

and let A be its vertex. The polar planes of A, for surfaces of the system, have a common line, say PQR, and this line contains the vertices of three cones† belonging to the system: let these vertices be P, Q, R. The line PQR has a polar plane with respect to each of the three cones: let these planes be $z = 0$, $u = 0$, $v = 0$, and let PQR be the intersection of the planes $x = 0$, $y = 0$. The cone with vertex

* Clifford (*Collected Papers*, pp. 229–230) states without proof that the pentads of planes envelope a twisted cubic. I am indebted to Dr. T. Stuart for this reference, and also for the following, on the subject of the three quaternary quadrics:—F. Mertens, *Wien Ak.*, Sb. 99 (1891), "Invariants of Three Quaternary Quadratic Forms"; J. S. Vanecek, *Liége S. Sc.*, Mm. 11. (1885), "Nets of Quadrics."

† If the line is taken to be the axis of z, the polar planes of $(0, 0, \zeta)$ have equations in which ζ occurs linearly as a parameter; the three polar planes for U V, W have the common point A, and will have a common line if a certain determinant vanishes, this determinant being of the third order and having constituents linear in ζ. When the three polar planes have a common line, their pole is the vertex of a cone belonging to the system.

P $(x = y = z = 0)$ must have an equation of the form $(x, y)^2 + Az^2 = 0$, since $z = 0$ is the polar plane of Q $(x = y = u = 0)$.

Similarly, the cones with vertices Q, R have equations

$$(x, y)^2 + Bu^2 = 0, \qquad (x, y)^2 + Cv^2 = 0,$$

and we must therefore have (unless A, B, C vanish)

$$U \equiv ax^2 + 2hxy + by^2 + cz^2 + du^2 + ev^2,$$

$$V \equiv a'x^2 + 2h'xy + b'y^2 + c'z^2 + d'u^2 + e'v^2,$$

$$W \equiv a''x^2 + 2h''xy + b''y^2 + c''z^2 + d''u^2 + e''v^2,$$

x, y, z, u, v being connected by an identical linear relation, say

$$lx + my + nz + fu + gv = 0.$$

2. The invariant Λ (Salmon, p. 209) is now the square root of the determinant of the equations included in

$$\Delta_3 V - \Delta_2 W \equiv \alpha(lx + my + nz + fu + gv),$$

$$\Delta_1 W - \Delta_3 U \equiv \beta(lx + my + nz + fu + gv),$$

$$\Delta_2 U - \Delta_1 V \equiv \gamma(lx + my + nz + fu + gv),$$

$$lx_1 + my_1 + nz_1 + fu_1 + gv_1 = 0,$$

$$lx_2 + my_2 + nz_2 + fu_2 + gv_2 = 0,$$

$$lx_3 + my_3 + nz_3 + fu_3 + gv_3 = 0,$$

where $$2\Delta_r = x_r \frac{\partial}{\partial x} + y_r \frac{\partial}{\partial y} + z_r \frac{\partial}{\partial z} + u_r \frac{\partial}{\partial u} + v_r \frac{\partial}{\partial v} \quad (r = 1, 2, 3).$$

This determinant is of the 18-th order and skew symmetrical, the quantities eliminated being x_1, y_1, z_1, u_1, v_1, x_2, y_2, ..., x_3, y_3, ..., α, β, γ.

For the forms given, Λ breaks up into the factors

$$\begin{vmatrix} a & h & b \\ a' & h' & b' \\ a'' & h'' & b'' \end{vmatrix} \cdot \begin{vmatrix} c & d & e \\ c' & d' & e' \\ c'' & d'' & e'' \end{vmatrix} nfg.$$

If the first factor vanishes, it is possible by a linear transformation of x, y to get rid of h, h', h'', so that the desired reduction is accomplished. The process involves the solution of a quartic, in finding a cone belonging to the system, then that of a cubic, in finding P, Q, R, and then that of a quadratic, in getting rid of h, h'.

3. There are three cases in which the argument fails even if $\Lambda = 0$: (1) when it is the second factor in Λ that vanishes, (2) when the cubic for finding P, Q, R is illusory, so that all points of the line PQR are vertices of cones of the system (3) when $nfg = 0$.

In case (2) the failure is generally only apparent; any three points on the line may be taken for P, Q, R, and the three planes z, u, v must have a common line: U, V, W have, in fact, a common pair of conjugate lines, but the only speciality in the working is that l, m vanish in the relation

$$lx+my+nz+fu+gv = 0.$$

When the failure in case (2) is absolute, and in case (1), the system contains a pair of planes that intersect in the line PQR, so that z, u, v are illusory. Suppose for simplicity that $W = 0$ is this pair of planes, and $U = 0$ the cone with vertex A. PQR must lie in the polar plane of A with respect to V, say $x = 0$.

Then we may write U, V in the canonical forms

$$U \equiv \quad cz^2+du^2+ev^2,$$

$$V \equiv a'x^2+c'z^2+d'u^2+e'v^2,$$

while

$$W \equiv a''x^2+2h''xy+b''y^2$$

$$\equiv \left(a''-\frac{h''^2}{b''}\right)x^2+\frac{1}{b''}(h''x+b''y)^2,$$

so that the reduction to five squares is still possible, under the condition $\Lambda = 0$, even when it is the second factor that vanishes.

In case (3), if, for instance, $g = 0$, $U-ev^2$, $V-e'v^2$, $W-e''v^2$ are ternary quadrics which can be expressed in terms of four squares by a known theorem. Hence U, V, W can be expressed in terms of five squares.

4. The number of possible reductions to five squares when $\Lambda = 0$ is singly infinite, since the point A may be the vertex of any cone belonging to the system. If we take two of the possible reductions and compare them, we have three identities, say

$$\sum_1^{10} A_r\alpha_r^2 = \sum_1^{10} B_r\alpha_r^2 = \sum_1^{10} C_r\alpha_r^2 = 0,$$

where A_r, B_r, C_r are constants and $\alpha_1, \alpha_2, \ldots, \alpha_{10}$ are linear in the coordinates x, y, z, w. Suppose the suffixes 1 to 5 to belong to the first reduction and 6 to 10 to the second. Suppose also that the identities have been linearly combined so that α_2^2, α_3^2 are absent from the first, α_1^2, α_3^2 from the second, α_1^2, α_2^2 from the third.

Following Serret, take a conicoid touching the seven planes $\alpha_4 = 0$,

$a_5 = 0, \ldots, a_{10} = 0$. Let its tangential equation be $\phi(\lambda, \mu, \nu, \rho) = 0$ and operate on the three identities with

$$\phi\left(\frac{\partial}{\partial x}, \frac{\partial}{\partial y}, \frac{\partial}{\partial z}, \frac{\partial}{\partial w}\right),$$

remembering that this operator annihilates $a_4^2, a_5^2, \ldots, a_{10}^2$. It then follows that the same operator must annihilate a_1^2, a_2^2, a_3^2, or that any conicoid touching seven of the planes must touch the other three also. These conicoids form a doubly infinite system with more than eight common tangent planes, and therefore with an infinity of common tangent planes: these must all osculate a twisted cubic. Hence we may write

$$a_r = x\theta_r^3 + y\theta_r^2 + z\theta_r + w \quad (r = 1, 2, \ldots, 10),$$

changing the tetrahedron of reference if necessary. The identities satisfied by $a_1^2, a_2^2, \ldots$ can now be recognized, and, since $A_2, A_3, B_3, B_1, C_1, C_2$ vanish, we may take for other suffixes

$$A_r = 1/f_1'(\theta_r), \quad B_r = 1/f_2'(\theta_r), \quad C_r = 1/f_3'(\theta_r),$$

where
$$\frac{f_1(\theta)}{\theta-\theta_1} = \frac{f_2(\theta)}{\theta-\theta_2} = \frac{f_3(\theta)}{\theta-\theta_3} = \prod_4^{10}(\theta-\theta_r).$$

Hence
$$A_4(\theta_4-\theta_1) = B_4(\theta_4-\theta_2) = C_4(\theta_4-\theta_3)$$

and
$$A_5(\theta_5-\theta_1) = B_5(\theta_5-\theta_2) = C_5(\theta_5-\theta_3).$$

Now $\dfrac{\theta_4-\theta_1}{\theta_4-\theta_2}\dfrac{\theta_5-\theta_2}{\theta_5-\theta_1}$ is the cross-ratio of the four points in which the planes a_1, a_4, a_2, a_5 cut any tangent to the cubic and this is equal to A_5B_4/A_4B_5 or to $235)(314)/(234)(315)$, where $(235), \ldots$ denote determinants of the matrix

$$\left\| \begin{matrix} A_1 & A_2 & A_3 & A_4 & A_5 \\ B_1 & B_2 & B_3 & B_4 & B_5 \\ C_1 & C_2 & C_3 & C_4 & C_5 \end{matrix} \right\|.$$

Similarly, the corresponding cross-ratio for a_3, a_4, a_1, a_5 is

$$(125)(234)/(124)(235),$$

and these expressions, which are independent of the special assumptions that $A_2, A_3, \ldots$ vanish, only involve quantities that occur in the first reduction to five squares, which we have supposed to be $a_1^2, a_2^2, a_3^2, a_4^2, a_5^2$.

Now a cubic which osculates five given planes is fixed if the cross-ratios of the points in which those planes meet any tangent are given, and hence the cubic which osculates the ten planes is not altered

when we change the second set of five for any other of the sets; it is a fixed cubic or, in other words, *when the three quadrics U, V, W are expressed by means of five squares, the five planes got by equating the squares to zero separately osculate a fixed cubic.*

5. If now we write $g(\theta)$ for $\prod_1^5(\theta-\theta_r)$ and $h(\theta)$ for $\prod_6^{10}(\theta-\theta_r)$, we have, as three quadrics of the system $\lambda U+\mu V+\nu W$,

$$\alpha_1^2(\theta_4-\theta_5)/h(\theta_1)+\alpha_4^2(\theta_5-\theta_1)/h(\theta_4)+\alpha_5^2(\theta_1-\theta_4)/h(\theta_5),$$
$$\alpha_2^2(\theta_4-\theta_5)/h(\theta_2)+\alpha_4^2(\theta_5-\theta_2)/h(\theta_4)+\alpha_5^2(\theta_2-\theta_4)/h(\theta_5),$$
$$\alpha_3^2(\theta_4-\theta_5)/h(\theta_3)+\alpha_4^2(\theta_5-\theta_3)/h(\theta_4)+\alpha_5^2(\theta_3-\theta_4)/h(\theta_5).$$

These are the first polars of $(\beta_1, 0, 0, \beta_4, \beta_5)$, $(0, \gamma_2, 0, \gamma_4, \gamma_5)$, $(0, 0, \delta_3, \delta_4, \delta_5)$ with respect to the cubic surface

$$\sum_1^5 E_r\alpha_r^3/h(\theta_r) = 0$$

if
$$E_1\beta_1 = \theta_4-\theta_5, \quad E_4\beta_4 = \theta_5-\theta_1, \quad E_5\beta_5 = \theta_1-\theta_4;$$
$$E_2\gamma_2 = \theta_4-\theta_5, \quad E_4\gamma_4 = \theta_5-\theta_2, \quad E_5\gamma_5 = \theta_2-\theta_4;$$
$$E_3\delta_3 = \theta_4-\theta_5, \quad E_4\delta_4 = \theta_5-\theta_3, \quad E_5\delta_5 = \theta_3-\theta_4.$$

The three poles therefore lie on the planes

$$\sum_1^5 E_r\alpha_r = 0, \qquad \sum_1^5 \theta_r E_r\alpha_r = 0,$$

which must be the same plane, since the poles are not collinear. The two equations can only differ by a factor, say θ_0, and we must have

$$\sum_1^5 (\theta_r-\theta_0)E_r\alpha_r = 0$$

in virtue of the identity connecting α_1, α_2, α_3, α_4, α_5, which is

$$\sum_1^5 \alpha_r/g'(\theta_r) = 0.$$

Thus we have $$E_r = 1/g'(\theta_r)(\theta_r-\theta_0).$$

The cubic surface is $$\sum_1^5 \alpha_r^3/h(\theta_r)\,g'(\theta_r)(\theta_r-\theta_0) = 0,$$

and the plane of the three poles is

$$\sum_1^5 \alpha_r/g'(\theta_r)(\theta_r-\theta_0) = 0,$$

that is, $$\alpha_0/g(\theta_0) = 0 \quad \text{or} \quad \alpha_0 = 0,$$

an osculating plane of the cubic corresponding to the parameter θ_0.

Hence Töplitz's cubic, osculated by the plane of the three poles in all positions, is osculated also by the five planes of each reduction.

The parameter θ_0 is arbitrary, and there is a further arbitrary element in that any multiple of α_0^3 may be added to one side of the equation to the cubic surface without affecting the polars of the three points.

6. The above theory leads to a method of carrying out the reduction which should be simpler in practice than that of Töplitz, the equations to be solved being simple with one exception.

The vanishing of Λ is the condition of solubility of a system of twelve linear equations, which are satisfied by the coordinates of three points, whose polars with respect to a cubic surface are U, V, W. Any one of the three points may take up any position on a straight line which is its locus, and the other two are then determined; for the coordinates involve a parameter θ linearly. The equation to the plane of the three points involves θ in the third degree so that the plane osculates a cubic. If seven positions of this plane are taken, say x_1, x_2, x_3, x_4, x_5, x_6, x_7, and, if x_8 is any eighth, the squares x_1^2, x_2^2, ..., x_8^2 satisfy a linear identity and thus U, V, W can be expressed in terms of x_1^2, x_2^2, ..., x_7^2 only, for we know that they can be expressed in terms of five such squares, properly chosen, and each of the five can be expressed in terms of x_1^2, ..., x_7^2. Suppose

$$U \equiv \sum_1^7 l_r x_r^2, \qquad V \equiv \sum_1^7 m_r x_r^2, \qquad W \equiv \sum_1^7 n_r x_r^2,$$

and let λ_1, λ_2, ..., λ_7 be the values of θ that correspond to x_1, x_2, ..., x_7. Take five other positions of the plane, α_1, α_2, ..., α_5, corresponding to θ_1, ..., θ_5 as parameters. Let

$$\prod_1^7 (\theta - \lambda_r) = h(\theta), \qquad \prod_1^5 (\theta - \theta_r) = g(\theta).$$

Then

$$\sum_1^7 \frac{x_r^2 \phi(\lambda_r)}{g(\lambda_r)\, h'(\lambda_r)} + \sum_1^5 \frac{\alpha_r^2 \phi(\theta_r)}{g'(\theta_r)\, h(\theta_r)} \equiv 0,$$

where ϕ is any quartic, and the problem is to be solved by finding three quartics ϕ_1, ϕ_2, ϕ_3, and a quintic g, so that

$$\frac{\phi_1(\lambda_r)}{g(\lambda_r)\, h'(\lambda_r)} = l_r \quad (r = 1, 2, \ldots, 7),$$

$$\frac{\phi_2(\lambda_r)}{g(\lambda_r)\, h'(\lambda_r)} = m_r \quad (r = 1, 2, \ldots, 7),$$

$$\frac{\phi_3(\lambda_r)}{g(\lambda_r)\, h'(\lambda_r)} = n_r \quad (r = 1, 2, \ldots, 7).$$

Multiplying by $g(\lambda_r)$ we have twenty-one equations, linear and homogeneous, in the twenty-one unknown coefficients. The fifteen coefficients

of ϕ_1,, ϕ_2, ϕ_3 can be eliminated at once, for we have

$$\sum_1^7 l_r\, g(\lambda_r) = \Sigma\, \phi_1(\lambda_r)/h'(\lambda_r) = 0$$

and
$$\sum_1^7 \lambda_r l_r\, g(\lambda_r) = 0 = \Sigma m_r\, g(\lambda_r) = \Sigma \lambda_r m_r\, g(\lambda_r)$$
$$= \Sigma\, n_r\, g(\lambda_r) = \Sigma \lambda_r n_r\, g(\lambda_r)$$

similarly. These six equations, with $\Sigma\, g(\lambda_r)/h'(\lambda_r) = 0$ would generally give $g(\lambda_r) = 0$ $(r = 1, 2, \ldots, 7)$, but in the present case only five of the seven can be independent, so that they give a value for $g(\lambda_r)$ of the form $ap_r + bq_r$, where a, b are arbitrary, and so

$$g(\theta) = h(\theta) \sum_1^7 (ap_r + bq_r)/(\theta - \lambda_r)\, h'(\lambda_r).$$

Thus $g(\theta)$ is found by the solution of simple equations only; a, b may be so chosen that θ_1, say, has any arbitrary value, and then θ_2, θ_3, θ_4, θ_5 are found by solving a quartic. Thus the five squares are determined and their coefficients are then found by solving linear equations.

7. Töplitz goes on to deduce the known theorem that any quaternary cubic can be expressed as the sum of five cubes. The following proof is closely related to the foregoing investigation.

If we take eleven osculating planes of the twisted cubic, with parameters $\theta_1, \theta_2, \ldots, \theta_{11}$, say $a_r = 0$ $(r = 1, 2, \ldots, 11)$, and, if we put $f(\theta)$ for $\prod_1^{11} (\theta - \theta_r)$, we have the identity

$$\sum_1^{11} a_r^3/f'(\theta_r) \equiv 0.$$

This enables us to reduce any expression $\sum_1^6 A_r a_r^3$, the sum of six cubes, to the sum of five, by proper choice of $a_7, a_8, \ldots, a_{11}$. The six planes $a_1, \ldots, a_6$ are quite arbitrary, since any six planes osculate a cubic curve.

Now the general quaternary cubic contains twenty terms and can be expressed in the form $\sum_1^{20} p_r x_r^3$ if $x_1, \ldots, x_{20}$ are twenty planes not touching the same surface of the third class. Any six of these terms can be reduced to five, and thus the number of terms can always be reduced when it is greater than five. Ultimately, then, the expression is reduced to the sum of five cubes.

ON DIFFERENTIALS

By W. H. Young, Sc.D., F.R.S.

[Read December 10th, 1908.—Received December 14th, 1908.]

1. As soon as we leave the domain of a single variable in the applications of the fundamental definitions of the calculus, we begin to feel almost at once that we are treading on less secure ground. There cannot, in the nature of things, be a theory applicable to functions of two or more variables as elegant and simple as that of the differential coefficient. A knowledge of the partial differential coefficients in the more general case is in no way concomitant to that of the single differential coefficient of a function of a single variable. Indeed, keeping before our minds the usual geometrical interpretation, and, for the sake of definiteness, fixing our thoughts on the plane as the geometrical image of the region of variation of two variables, we cannot even assert that a knowledge of the differential coefficients in *every* direction at the point constitutes an equivalent for the knowledge of the differential coefficient in the case of a single variable. To understand and to characterise the behaviour of a function in the neighbourhood of a point, we must have recourse to what have been called *differentials*. But we have only to turn to the pages of Stolz,* which still, I believe, constitute the last word on the subject,† to see in what an imperfect form the theory of differentials has hitherto remained. There is some evidence of effort definitely directed towards the attaining of parallelism between the theory of differentials and that of differential coefficients in one dimension, but its success is very partial.

In a paper just presented to the Académie des Sciences‡ I stated and proved a theorem§ whose object was to place the theory on a secure basis. In the present paper I propose to develop some of the consequences of

---

* O. Stolz, *Grundzüge der Differenzial- und Integralrechnung*, Leipzig, 1893, Vol. I., § 4, pp. 112 *seq*. In the second edition of Jordan's *Cours d'Analyse*, published in the same year, the subject is in a more embryonic stage.

† A brief account of some of these results is to be found in Hobson's *Theory of Functions of a Real Variable*, Cambridge University Press, 1907.

‡ "Note sur les Differentielles," *Comptes Rendus*. [The note was in Monsieur Picard's hands in the middle of November, but, owing to unforeseen circumstances, was not presented until January.—W. H. Y., March 18th, 1909.]

§ I there call the theorem the fundamental theorem in the theory of differentials, and I do not indeed see how any further progress could have been made so long as this theorem remained unknown.

that theorem, repeating the proof, which is quite short, partly for convenience of reference and partly because I here adopt my own form of the definitions involved, whereas in the *Comptes Rendus* paper I used those of Stolz.

2. The advantage of the new form of the definitions is that the parallelism between the theories of one variable and more than one variable is carefully preserved. This is particularly the case with two fundamental theorems with which this paper is more especially concerned. In the case of a single variable these theorems have the following known form :—

(1) If $f(x)$ and all its differential coefficients, up to the n-th inclusive exist at the point a [or, more briefly, but with precisely the same meaning, if the n-th differential coefficient of $f(x)$ exist at the point a], then

$$f(a+h) = f(a)+hf'(a)+\tfrac{1}{2}h^2f''(a)+\ldots+\frac{1}{n!}[f^n(a)+e],$$

where e has the unique limit zero when h approaches zero in any manner.

(2) If $f(x)$ and all its differential coefficients up to the $(n-1)$-th inclusive exist in the closed interval $(a, a+h)$, and if the n-th differential coefficient exist in the entirely open interval $(a, a+h)$, then

$$f(a+h) = f(a)+hf'(a)+\tfrac{1}{2}h^2f''(a)+\ldots+\frac{1}{(n-1)!}f^{n-1}(a)+\frac{1}{n!}f^n(a+\theta h),$$

where $$0 < \theta < 1.$$

Both these theorems have very great importance in the theory of functions of a single variable. It is on an analogous formula to the first, supposed to hold for a function of more than one variable, that Stolz bases his definition of an n-th differential. In fact, in the theory of functions of two or more variables a formula of this type is indispensable, even of greater importance than in the case of a single variable, where indeed it is really equivalent to the existence of an n-th differential coefficient.

With regard to the second theorem, it is partly generalised for more than one variable in the theorem known as Cauchy's.* Whereas, however, in the theorem for a single variable, the mere existence of the n-th

* Stolz, *Grundzüge*, pp. 159–161. Hobson, *loc. cit.*, p. 514, calls it Taylor's theorem for two or more variables.

differential coefficient is required in the open interval, in the theorem in question the continuity as well as the existence of all the n-th differential coefficients is required. The new definitions and the fundamental theorem published in the *Comptes Rendus*, enable us to state and prove theorems which are the precise generalisations of both these theorems in one dimension, generalisations true for any number of variables. The importance of such generalisations need not be dwelt upon.

One other point deserves special mention. In the naive work usual before attention had been paid to first principles, two mistakes were made in shewing how to determine the successive differential coefficients with respect to t, say, of a function of two or more functions x, y, ... of t, or again in determining the successive differential coefficients of an implicit function of several variables. The first mistake has been to assume that if the differential coefficients concerned all existed with respect to the various variables in question, continued differentiation was necessarily allowable. In other words, it was tacitly assumed that

$$\frac{df}{dt} = \frac{df}{dx}\frac{dx}{dt} + \frac{df}{dy}\frac{dy}{dt} + \dots .$$

The second mistake has been the tacit assumption that the various mixed differential coefficients that occurred were independent of the *order* in which the various differentiations implied in them were performed. It is a result of the *Comptes Rendus* theorem and its generalisation in the present paper that, if in any particular example the former assumption is allowable, the second assumption is also necessarily allowable.

3. For the sake of completeness I begin by proving the former of the equations above alluded to. As far as I know, no account of it exists in English. The equation to be proved was

$$f(a+h) = f(a) + hf'(a) + \tfrac{1}{2}h^2 f''(a) + \dots + \frac{1}{n!}[f^n(a) + e],$$

where e has zero as unique limit when h approaches zero in any manner whatever, provided only $f^{(n)}(a)$ exists.

From the definition of a differential coefficient, we have

$$\frac{f(a+h) - f(a)}{h} = f'(a) + e,$$

where e vanishes with h, provided $f'(a)$ exists and is finite. This proves the required equation for $n = 1$.

Put in the general case

$$F(h) = f(a+h) - f(a) - hf'(a) - \ldots \frac{h^{n-1}}{(n-1)!} f^{(n-1)}(a).$$

Further, put $$G(h) = h^n.$$

Then both $F(h)$ and $G(h)$ are finite and continuous functions of h in an interval containing $h = 0$, and $G(h)$ is monotone. Also, by the hypothesis made,

$$F(h),\ F'(h),\ \ldots,\ F^{(n-1)}(h),$$

$$G(h),\ G'(h),\ \ldots,\ G^{(n-1)}(h),$$

all are zero at the origin; hence, by the theory of indeterminate forms,

$$\operatorname*{Lt}_{h=0} \frac{F(h)}{G(h)} = \operatorname*{Lt}_{h=0} \frac{F^{(n-1)}(h)}{G^{(n-1)}(h)} = \operatorname*{Lt}_{h=0} \frac{f^{(n-1)}(a+h) - f^{(n-1)}(a)}{n!\,h} = \frac{f^{(n)}(a)}{n!},$$

by definition. Hence the required result follows.

All that we have assumed here is that $f(x)$ has all its differential coefficients up to the $(n-1)$-th finite and continuous in a closed interval containing the point a, and that $f^{(n)}(a)$ exists, which last assumption includes the others.

4. DEFINITION.—*A function $f(x, y)$ of two real variables is said to have a total differential at the point (a, b), if*

(A) *The partial differential coefficients*

$$f_a = \frac{\partial f(a, b)}{\partial a} \quad \text{and} \quad f_b = \frac{\partial f(a, b)}{\partial b},$$

both exist and are finite at the point (a, b).

(B) *At all points $(a+h, b+k)$ of a closed neighbourhood of the point (a, b), the function can be expressed as follows*

$$f(a+h, b+k) = f(a, b) + hf_a + kf_b + he + ke', \qquad (1)$$

where e and e' have each the unique double limit zero when h and k approach zero in any manner whatever.

Note 1.—For brevity the word *total* is usually omitted, and it is sometimes, for reasons which will appear, replaced by the word *first*, and we speak of *a differential of the first order.*

Note 2.—$hf_a + kf_b$ is often called *the first differential** of $f(x, y)$ and

* *E.g.*, Jordan, *Cours d'Analyse*, ed. 2, p. 76.

denoted by df or d^1f. It should, however, be noticed that this name is only properly applied when an equation of the form (1) holds.

Thus, for instance, it would be misleading to say that the function*

$$0 \leqslant f(x, y) = \sqrt{|xy|}$$

had zero for first differential at the origin, although hf_x+kf_y is zero for all values of h and k when x and y are both zero. To assert this would imply a differential connection

$$f(h, k)-f(0, 0) = he+ke',$$

where e and e' have zero as unique double limit when h and k approach zero in any manner whatever. This is, however, impossible, since, using polar coordinates and dividing by r, such a connection would reduce to

$$0 \leqslant \sqrt{|\cos\theta \sin\theta|} = e\cos\theta+e'\sin\theta,$$

in which the left-hand side is constant and different from zero, if we choose our approach to the origin to be along a ray other than one of the axes, while the right-hand side has the limit zero.

For this reason I myself use the expressions "a first differential exists at the point (a, b)" and "$f(x, y)$ has a first differential at the point (a, b)," as perfectly synonymous,† and only when the conditions (A) and (B) specified in the definition are fulfilled will the term differential and the symbol df be used for the expression hf_a+kf_b.

5. It follows from the equation (1) that, *if a first differential exist at the point (a, b), $f(x, y)$ is a continuous function of the ensemble (x, y) at the point (a, b), and that the differential of a sum is the sum of the differentials provided these exist.*

THEOREM 1.—*In order that $f(x, y)$ may have a first differential, it is sufficient, beside the obvious condition that f_a and f_b should both exist and be finite, that one of the two incrementary ratios*

$$m_{a+h}(b, b+k) = \frac{f(a+h, b+k)-f(a+h, b)}{k},$$

$$m_{b+k}(a, a+h) = \frac{f(a+h, b+k)-f(a, b+k)}{h},$$

* J. Thomae, *Complexe Functionen*, p. 17, quoted in Stolz, *Grundzüge*, p. 133.

† Stolz seems to recognise a distinction in these expressions, but never utilises it. *Grundzüge*, p. 156. The point of view adopted by Hobson is the same as my own, *Functions of a Real Variable*, p. 313, lines 10–16.

*should have a unique double limit when h and k approach zero in any manner whatever.**

This is an immediate consequence of the identities

$$f(a+h, b+k)-f(a, b) = hm_b(a, a+h)+km_{a+h}(b, b+k)$$
$$= hm_{b+k}(a, a+h)+km_a(b, b+k).$$

COR.—*If either f_x or f_y is a continuous function of the ensemble (x, y) at the point (a, b), while the other exists at that point, then $f(x, y)$ has a first differential at (a, b).*

For in this case, by the theorem of the mean, the above two incrementary ratios have the same limit as

$$f_y(a+h, b+\theta k) \quad \text{and} \quad f_x(a+\theta h, b+k) \quad (0 < \theta < 1),$$

viz., f_b and f_a respectively.†

6. THEOREM 2.—*If df/dx, and df/dy each have differentials of the first order at the point (x, y), then*

$$\frac{d}{dx}\frac{df}{dy} = \frac{d}{dy}\frac{df}{dx},$$

and the double incrementary ratio

$$m(x, y;\ x+h, y+k) \equiv \frac{f(x+h, y+k)-f(x+h, y)-f(x, y+k)+f(x, y)}{hk},$$

has their common value for unique double limit, as h and k approach zero in any manner whatever.

Since f_x has a differential of the first order,

$$f_x(x+h, y+k)-f_x(x, y) = h(f_{xx}+e)+k(f_{yx}+e'), \tag{1}$$

where e and e' have zero as unique double limit as h and k approach their limit zero. Now

$$f_x(x+h, y+k)-f_x(x, y)$$
$$= \frac{f_x(x+h, y+k)-f_x(x+h, y)}{k}k + \frac{f_x(x+h, y)-f_x(x, y)}{h}h$$
$$= \frac{f_x(x+h, y+k)-f_x(x+h, y)}{k}k + (f_{xx}+e'')h, \tag{2}$$

where e'' vanishes with h, however k varies.

---

* Cp., for example, Hobson, *loc. cit.*, pp. 312, 313.

† Thomae, *loc. cit.*, p. 37, quoted in Hobson, p. 314.

Equating the right-hand sides of (1) and (2) and dividing by k, we get

$$\frac{f_x(x+h,\ y+k)-f_x(x+h,\ y)}{k} = \frac{h(e-e'')}{k} + f_{yx} + e'. \qquad (3)$$

Hence, however, h and k proceed to their limit zero, provided h/k does not become infinite, that is k/h does not become zero, the right-hand side of (3) has the limit f_{yx}, so that the same is true of the left-hand side of (3). In the same way we prove, by considering f_y and interchanging x and y, that $\frac{f_y(x+h,\ y+k)-f_y(x,\ y+k)}{h}$ has the unique limit f_{xy} for all modes of approach of $(h,\ k)$ to $(0,\ 0)$, provided h/k has not zero for limit.

Now, writing $\quad m_y(x,\ x+h) \equiv \frac{f(x+h,\ y)-f(x,\ y)}{h},$

we have

$$m(x,\ y\ ;\ x+h,\ y+k) \equiv \frac{m_{y+k}(x,\ x+h)-m_y(x,\ x+h)}{k} = \frac{d}{dy} m_{y+\theta k}(x,\ x+h),$$

where $$0 < \theta < 1.$$

Hence $$m(x,\ y;\ x+h,\ y+k) = \frac{f_y(x+h,\ y+\theta k)-f_y(x,\ y+\theta k)}{h}. \qquad (4)$$

Now, if $(h,\ k)$ moves towards $(0,\ 0)$ in such a way that h/k has not zero as limit, $h/\theta k$ will not have zero for a limit; and therefore, by what has been proved, the right-hand side of (4) will have the unique double limit f_{xy}, and therefore the same is true of $m(x,\ y\ ;\ x+h,\ y+k)$.

Similarly, we prove that if $(h,\ k)$ moves towards $(0,\ 0)$ in such a way that k/h has not zero for a limit, m will have f_{yx} for unique double limit.

Since we can choose a mode of approach of $(h,\ k)$ to $(0,\ 0)$ for which neither h/k nor k/h has zero for a limit, it follows that $m(x,\ y\ ;\ x+h,\ y+k)$ has a unique limit whose value is

$$f_{xy} = f_{yx};$$

this proves the theorem.*

THEOREM 2*a*.—*If throughout a closed neighbourhood of a point* $(a,\ b)$ *the second partial differential coefficients of* $f(x,\ y)$ *all exist and are independent of the order of differentiation, and have first differentials at*

* [A referee objects that $(h,\ k)$ might approach $(0,\ 0)$ in such a way that both h/k and k/h have the limit zero, *e.g.*, $(h_{2\nu+1},\ k_{2\nu+1}) = \left(\frac{1}{\nu^2},\ \frac{1}{\nu}\right)$, $(h_{2\nu},\ k_{2\nu}) = \left(\frac{1}{\nu},\ \frac{1}{\nu^2}\right)$. But the limits of m so obtained consist precisely of those obtained from the two sub-sets for which the suffixes are respectively odd and even: for the first of these k/h has not the limit zero, so that m has the unique limit f_{yx}; for the second m has similarly the equal unique limit f_{xy}. It is evident, in fact, more generally that all the limits of m are obtained by considering separately all sets of approach for which k/h has not the limit zero, and those for which h/k has not the limit zero.—W. H. Y., March 18th, 1909.]

(a, b), *then the third partial differential coefficients at the point* (a, b) *are independent of the order of differentiation.*

For, since $$f_{xy} = f_{yx},$$

we have, differentiating partially with respect to x, at the point (a, b) where, by the hypothesis, the third differential coefficients exist,

$$f_{aab} = f_{aba}. \tag{1}$$

Again, since $\frac{d}{dx} \cdot \frac{df}{dx}$ and $\frac{d}{dy} \cdot \frac{df}{dx}$ have first differentials at (a, b), it follows, from Theorem 2, that

$$\frac{d^2}{da\,db} f_a = \frac{d^2}{db\,da} f_a.$$

that is, $$f_{aba} = f_{baa}. \tag{2}$$

From (1) and (2), we have $$f_{aab} = f_{aba} = f_{baa},$$

and similarly $$f_{bba} = f_{bab} = f_{abb},$$

so that the order of differentiation in the partial differential coefficients at the point (a, b) is indifferent. Q.E.D.

THEOREM 2*b*.—*If throughout a closed neighbourhood of a point* (a, b) *the* $(n-1)$*-th partial differential coefficients of* $f(x, y)$ *all exist and are independent of the order of differentiation, and have first differentials at* (a, b), *then the order of differentiation is indifferent in the n-th differential coefficients at the point* (a, b).

Let D_{n-1} denote any one of the partial differential coefficients of $(n-1)$-th order involving r differentiations with respect to y; then by hypothesis,

$$\frac{d^{n-1} f}{dx^{n-r-1} dy^r} = D_{n-1}.$$

Since this is true at every point (x, y), we may differentiate at the point (a, b), where, by hypothesis, all the differential coefficients of the n-th order exist. We thus get

$$\frac{d^n f}{dx^{n-r} dy^r} = \frac{d}{dx} D_{n-1} \text{ at } (a, b). \tag{1}$$

Again, if D_{n-2} denote any one of the partial differential coefficients of $(n-2)$-th order involving $(r-1)$ differentiations with respect to y,

$$\frac{d}{dx} D_{n-2} \quad \text{and} \quad \frac{d}{dy} D_{n-2}$$

are both partial differential coefficients of f of order $(n-1)$, and have, by the hypothesis, first differentials. Therefore, by Theorem 2,

$$\frac{d^2}{dx\,dy} D_{n-2} = \frac{d^2}{dy\,dx} D_{n-2}. \tag{2}$$

Remembering that $\frac{d}{dy} D_{n-2}$ is of the form D_{n-1}, the equations (1) and (2) give

$$\frac{d^n f}{dx^{n-r}\,dy^r} = \frac{d}{dx} D_{n-1} = \frac{d^2}{dy\,dx} D_{n-2},$$

which shews that we may change the order of differentiation in $\frac{d^n f}{dx^{n-r}\,dy^r}$ in any manner without changing the value of the partial differential coefficient, since by the hypothesis we may permute the order of differentiation as we please in D_{n-1} and $\frac{d}{dx} D_{n-2}$.

7. The higher differentials are defined, like the higher differential coefficients successively, and, like the differential coefficients, must be understood only to exist at a point when all the preceding differentials exist not only at that point, but also in a closed neighbourhood of that point. Another analogy between the definitions consists in the fact that whereas the first differential, like the first differential coefficient, is defined by means of a process involving the function $f(x, y)$ itself, the higher differentials, like the higher differential coefficients, are defined by means of the same process involving not the function itself directly but the preceding differential.

DEFINITION OF THE SECOND DIFFERENTIAL d^2f.—*If the first differential d^1f, in which we regard h and k as arbitrary constants, has a first differential at the point (a, b), this differential is called the second differential of f at the point (a, b), and is denoted by d^2f.*

This is clearly equivalent to the following :—

If f_x and f_y exist in a closed neighbourhood of the point (a, b), and have first differentials at the point (a, b), *then provided f has a first differential in the neighbourhood of (a, b),*

$$h df_x + k df_y$$

is called the second differential of f, or say

$$d^2f = h df_x + k df_y = h(h f_{xx} + k f_{yx}) + k(h f_{xy} + k f_{yy}).$$

It should be noticed that we are following closely the analogy with the theory in the case of one independent variable. We define, in fact, $f'(x)$ as the limit of

$$\frac{f(x+h)-f(x)}{h},$$

that is, virtually by means of the equation

$$f(x+h)-f(x) = h[f(x)+e],$$

but we do not define $f''(x)$ by a similar expansion statement, not, for example, as the limit of

$$\frac{f(x+h)-f(x)-hf'(x)}{h},$$

but as the differential coefficient of $f'(x)$.

It is worth remarking that the mere fact that f_x and f_y have first differentials at the point (a, b), necessitating as it does the continuity of f_x and f_y with respect to the ensemble (x, y) at the point (a, b), involves the existence of df there, but not, of course, necessarily in the neighbourhood of that point. Beside the reason already given, that of the analogy with the usual theory of differential coefficients, there is, however, as we shall see later, very strong ground for the course I have adopted, in the above definition, instead of the one which at first suggests itself of requiring only that f_x and f_y should have first differentials at the point (a, b), omitting the further condition that f should have a first differential in the neighbourhood of the point.

By Theorem 2 it now follows that *when d^2f exists,*

$$f_{ab} = f_{ba}, \tag{2}$$

so that we may write the second differential in the following form

$$d^2f = h^2f_{aa}+2hkf_{ab}+k^2f_{bb}, \tag{3}$$

or, symbolically, $$d^2f = \left(h\frac{\partial}{\partial a}+k\frac{\partial}{\partial b}\right)^2 f.$$

8. DEFINITION OF THE THIRD DIFFERENTIAL d^3f.—*If the second differential d^2f, in which we regard h and k as arbitrary constants, has a first differential at the point (a, b), this differential is called the third differential of f at the point (a, b) and is denoted by d^3f.*

First, it is tacitly included in the hypothesis that

$$d^2f \quad \text{or} \quad h^2f_{xx}+2hkf_{xy}+k^2f_{yy}$$

exists throughout a closed neighbourhood of the point (a, b). Hence

$$f_{xy} = f_{yx},$$

also, the differential of the sum being the sum of the differentials, each of the differential coefficients of the second order has a first differential, so that, by Theorem 2a, the order of differentiation is indifferent in the partial differential coefficients of the third order.

Hence we have $d^3f = h^2 df_{aa} + 2hk f_{ab} + k^2 f_{bb}$

$$= h^3 f_{aaa} + 3h^2 k f_{aab} + 3hk^2 f_{abb} + k^3 f_{bbb}$$

$$= \left(\frac{d^3 f}{da^3},\ \ldots \times h,\ k\right)^3$$

in Cayley's notation, or, symbolically,

$$= \left(h\frac{\partial}{\partial a} + k\frac{\partial}{\partial b}\right)^3 f.$$

We notice that the mere hypothesis that f_{xx}, f_{xy}, and f_{yy} have first differentials at the point (a, b) insures the existence of the second differential d^2f at the point (a, b), but not in its neighbourhood. For in this case f_{xx}, f_{xy} and f_{yy} exist and are finite in a closed neighbourhood of (a, b), and are continuous at that point with respect to the ensemble (x, y), so that f_x and f_y also exist in that closed neighbourhood. Hence the Dini-Schwarz conditions* for the reversibility of the order of differentiation are satisfied, so that f_{ba} also exists, and is equal to f_{ab}. Hence, using Theorem 1, Cor. 2, both f_x and f_y have differentials at the point (a, b), so that d^2f exists at that point.

9. DEFINITION OF THE n-TH DIFFERENTIAL d^nf.—*If the* $(n-1)$*-th differential, in which we regard* h *and* k *as arbitrary constants, has a first differential at the point* (a, b), *this differential is called the* n*-th differential of* f *at the point* (a, b), *and is denoted by* d^nf.

Here, as before, we get

$$d^nf = h^{n-1} df_{a^{n-1}} + (n-1)\, h^{n-2} k\, df_{a^{n-2}b} + \ldots$$

$$= \sum_{r=0}^{r=n} \binom{n}{r} h^{n-r} k^r \frac{d^nf}{da^{n-r}db^r} = \left(\frac{d^nf}{da^n},\ \ldots \times hk\right)^n,$$

* Cp., for instance, the *Note on Partial Derivates and the Reversibility of the Order of Differentiation*, by the present author, just presented to the Royal Society of Edinburgh.

or, symbolically,

$$= \left(h\frac{\partial}{\partial a} + k\frac{\partial}{\partial b}\right)^n f,$$

and we shew that the order of differentiation is indifferent to the partial differential coefficients of the n-th order at the point (a, b), using for this purpose Theorem 2b.

It follows at once from the definitions that, *if f has an n-th differential at (a, b), then $d^1 f$ has an $(n-1)$-th differential at (a, b), and that f itself has all the differentials up to the $(n-1)$-th inclusive, not only at (a, b), but also in a suitable neighbourhood of the point (a, b).*

10. We are now in a position to state and prove our expansion theorems. We begin by repeating the following statement :—

If $f(x, y)$ has a first differential at the point (a, b), we may expand $f(x, y)$ in the neighbourhood of (a, b) in the following form :—

$$f(a+h, b+k) = f(a, b) + df(a, b) + he_1 + ke_2,$$

where e_1 and e_2 have each the unique double limit zero when h and k approach zero in any manner whatever.

This is, in fact, only another form of writing the equation (1) used in the definition of the first differential (§ 4).

THEOREM 3.—*If $f(x, y)$ has a first differential at the point (a, b), and $\partial f/\partial x$, $\partial f/\partial y$ have first differentials at the same point,*

$$f(a+h, b+k)$$

$$= f(a, b) + df(a, b) + \tfrac{1}{2}(h^2 f_{aa} + 2hkf_{ab} + k^2 f_{bb}) + \tfrac{1}{2}(h^2 e_1 + 2hke_2 + k^2 e_3),$$

where e_1, e_2 and e_3 each have the unique double limit zero when h and k approach zero in any manner whatever.

For, since f has a second differential at the point (a, b) the conditions of Theorem 2 are satisfied, so that $m(a+h, b+k;\ a, b)$ has the unique limit f_{ab} or f_{ba}. Hence

$$f(a+h, b+k) - f(a+h, b) - f(a, b+h) + f(a, b) = hk(f_{ab} + e_2),$$

where e_2 has the unique double limit zero.

But, since f_{xx} and f_{yy} exist and are finite, we have, by one-dimensional theory (§ 3),

$$f(a+h, b)-f(a, b) = hf_a+\frac{h^2}{2!}(f_{aa}+e_1),$$

$$f(a, b+k)-f(a, b) = kf_b+\frac{k^2}{2!}(f_{bb}+e_3),$$

where e_1 vanishes with h, independently of k, and e_3 vanishes with k, independently of h.

Adding the three last equations, the theorem follows.

Note 1.—The condition that $f(xy)$ has a first differential at the point is, of course, included in the further conditions of the enunciation.

Note 2.—This shews that e_1 is a function of h alone, e_3 of k alone, but that e_2 is a function both of h and of k.

COR.—*If* $f(xy)$ *has a second differential at the point* (a, b),

$$f(a+h, b+k) = f(a, b)+df(a, b)+\tfrac{1}{2}d^2f(a, b)+\tfrac{1}{2}(h^2e_1+2hke_2+k^2e_3).$$

11. The above was the original proof given by me in the *Comptes Rendus* paper. The following is an alternative proof of the corollary which lends itself easily to generalisation. It depends on the following Lemma:—

LEMMA.—*If* $f(a, b) = 0$ *and* $f(A, B) = 0$, *while* $f(x, y)$ *has a first differential throughout an area containing the whole stretch from* (a, b) *to* (A, B), *then there is a point* (x, y) *internal to that stretch at which*

$$(x-a)f_x+(y-b)f_y = 0.$$

Put $$x = a+(A-a)t, \qquad y = b+(B-b)t,$$

then, by the first theorem of the mean for a single variable,

$$\frac{df}{dt} = 0,$$

for some value of t internal to the interval (0, 1), which corresponds therefore to a point (x, y) internal to the stretch from (a, b) to (A, B).

But since $f(x, y)$ has a differential throughout the area considered,

$$0 = \frac{df}{dt} = (A-a)f_x+(B-b)f_y = \frac{A-a}{x-a}[(x-a)f_x+(y-b)f_b],$$

since

$$\frac{x-a}{A-a} = \frac{y-b}{B-b},$$

which proves the Lemma.

THEOREM 3. COR.—(*Alternative proof.*)

Let l, m, and n be any functions of a, b, h and k, such that, identically,

$$0 = f(a+h, b+k)-f(a, b)-hf_a-kf_b-\frac{1}{2!}(lh^2+2mhk+nk^2). \quad (1)$$

In the right-hand side of this equation change h into $(x-a)$ and k into $(y-b)$, excepting only in l, m, and n which are to be left unaltered, and denote the result by $g(x, y)$. Thus

$$g(x, y) = f(x, y)-f(a, b)-(x-a)f_a-(y-b)f_b-\frac{1}{2!}S_2, \quad (2)$$

where

$$S_2 = l(x-a)^2+2m(x-a)(y-b)+n(y-b)^2. \quad (3)$$

From the form of g we see that $g(a, b) = 0$, and comparison with (1) shews that $g(a+h, b+k) = 0$. Also, since $f(x, y)$, and therefore $g(x, y)$, has a second differential at (a, b), $g(x, y)$ has a first differential throughout an area containing the point (a, b) as internal point. Hence the Lemma may be applied and we deduce that there is a point (x, y) internal to the stretch from (a, b) to $(a+h, b+k)$, such that

$$(x-a)g_x+(y-b)g_y = 0.$$

Now, from (2) and (3),

$$g_x = f_x-f_a-[l(x-a)+m(y-b)]. \quad (4)$$

But, since $f(x, y)$ has a second differential at the point (a, b), f_x has a first differential at the same point, so that

$$0 = f_x-f_a-[(x-a)(f_{aa}+e_1')+(y-b)(f_{ab}+e_2')], \quad (5)$$

where the e's have zero as limit when $(x-a)$ and $(y-b)$ have zero as limit. By (4) and (5),

$$g_x = (x-a)(f_{aa}+e_1'-l)+(y-b)(f_{ab}+e_2'-m).$$

Similarly, $g_y = (x-a)(f_{ab}+e_1''-m)+(y-b)(f_{bb}+e_2''-n).$

Hence

$$0 = (x-a)\,g_x+(y-b)\,g_y$$
$$= (x-a)^2(f_{aa}+e_1'-l)+2(x-a)(y-b)\left[f_{ab}+\tfrac{1}{2}(e_2'+e_2'')-m\right]$$
$$+(y-b)^2(f_{bb}+e_2''-n), \quad (6)$$

which only differs from S_2 in the coefficients.

Remembering the position of the point (x, y), we have

$$\frac{x-a}{h} = \frac{y-b}{k},$$

so that in the homogeneous equation (6) we may replace $(x-a)$ by h, and $(y-b)$ by k. We thus get

$$lh^2+2mhk+nk^2 = h^2(f_{aa}+e_1)+2hk(f_{ab}+e_2)+k^2(f_{bb}+e_3), \quad (7)$$

where the e's certainly have zero as limit when h and k approach zero in any manner whatever, since $(x-a)$ and $(y-b)$ are numerically less than h and k respectively.

Using the equation (7) to eliminate l, m, and n from (1) we get the required expansion,

$$f(a+h, b+k)$$
$$= f(a, b)+hf_a+kf_b+\frac{1}{2!}\left[h^2(f_{aa}+e_1)+2hk(f_{ab}+e_2)+k^2(f_{bb}+e_3)\right].$$

12. We now proceed to prove the general theorem of which Theorem 3 is a particular case.

THEOREM 4.—*If $f(x, y)$ has an $(n-1)$-th differential at the point (a, b) while the $(n-1)$-th differential coefficients exist and are independent of the order of differentiation in a closed neighbourhood of the point (a, b), and have first differentials at (a, b), then the "n-th expansion theorem" holds, that is to say*

$$f(a+h, b+k)$$
$$= f(a, b)+df(a, b)+\tfrac{1}{2}d^2f(a, b)+\ldots+\frac{1}{n!}\left(\frac{d^nf}{da^n}, \ldots \chi h, k\right)^n+\frac{1}{n!}E_n,$$

where $$E_n = \sum_{r=0}^{r=n} \binom{n}{r} e_r h^{n-r} k^r = (e_0 e_1 \dots e_n \between hk)^n,$$

and the quantities e_r all have zero as unique double limit when h and k approach zero in any manner whatever.

Let $l_0, l_1, \dots, l_n$ be any functions of a, b, h, and k, such that identically

$$0 = f(a+h, b+k) - f(a, b) - df(a, b) - \tfrac{1}{2} d^2 f(a, b) - \dots$$
$$- \frac{1}{(n-1)!} d^{n-1} f(a, b) - \frac{1}{n!} (l_0, l_1, \dots, l_n \between hk)^n. \quad (1)$$

In the right-hand side of this identity change h into $(x-a)$ and k into $(y-b)$, excepting only in $l_0, l_1, \dots, l_n$, which are left unaltered and denote the result by $g(x, y)$, so that

$$g(xy) = f(x, y) - f(ab) - \left\{ \frac{df}{da}(x-a) + \frac{df}{db}(y-b) \right\}$$
$$- \frac{1}{2!} \left(\frac{d^2 f}{da^2}, \dots \between x-a, y-b \right)^2 - \dots$$
$$- \frac{1}{(n-1)!} \left(\frac{d^{n-1} f}{da^{n-1}}, \dots \between x-a, y-b \right)^{n-1}$$
$$- \frac{1}{n!} (l_0, l_1, \dots, l_n \between x-a, y-b)^n. \quad (2)$$

Then $$g(a, b) = 0, \qquad g(a+h, b+k) = 0.$$

Also, since $f(x, y)$ has a first differential in the neighbourhood of the point (a, b), $g(xy)$ has the same property, so that, by the Lemma, there is a point (x, y) internal to the stretch from (a, b) to $(a+h, b+k)$, such that

$$(x-a) g_x + (y-b) g_y = 0. \quad (3)$$

Now, since

$$\frac{d}{dx} \frac{1}{m!} (A_0, A_1, \dots, A_m \between x-a, y-b)^m$$
$$\equiv \frac{1}{(m-1)!} (A_0, A_1, \dots, A_{m-1} \between x-a, y-b)^{m-1},$$

and $$\frac{d^m f}{da^{m-r+1} db^{r-1}} = \frac{d^{m-1} f_a}{da^{m-r} db^{r-1}},$$

we get, by differentiating (2),

$$g_x = f_x - f_a - \left[(x-a)\frac{df_a}{da} + (y-b)\frac{df_a}{db}\right] - \ldots$$

$$- \frac{1}{(n-2)!}\left(\frac{d^{n-2}f_a}{da^{n-2}}, \ldots \mid x-a, y-b\right)^{n-2}$$

$$- \frac{1}{(n-1)!}(l_0, l_1, \ldots, l_{n-1} \mid x-a, y-b)^{n-1}.$$

Thus, *if the* $(n-1)$*-th expansion theorem holds for* f_x,

$$g_x = \frac{1}{(n-1)!}\left(\frac{d^{n-1}f_a}{da^{n-1}}, \ldots \mid x-a, y-b\right)^{n-1}$$

$$+ \frac{1}{(n-1)!}(e'_0, e'_1, \ldots, e'_{n-1} \mid x-a, y-b)^{n-1}$$

$$- \frac{1}{(n-1)!}(l_0, l_1, \ldots, l_{n-1} \mid x-a, y-b)^{n-1}$$

$$= \frac{1}{n!}\frac{d}{dx}\left(\frac{d^nf}{da^n} - l_0, \ldots, \frac{d^nf}{db^n} - l_n \mid x-a, y-b\right)^n$$

$$+ \frac{1}{(n-1)!}(e'_0, e'_1, \ldots, e'_{n-1} \mid x-a, y-b)^{n-1},$$

where the e's have zero as limit, when h and k, and therefore $(x-a)$ and $(y-b)$, have zero as limit.

A similar expression holds for g_y *provided the* $(n-1)$*-th expansion theorem holds for* f_y, this expression involving quantities $e''_1, e''_2, \ldots, e''_n$, which again have zero as double limit.

Thus, by (3),

$$0 = (x-a)g_x + (y-b)g_y = \frac{1}{(n-1)!}\left(\frac{d^nf}{da^n} - l_0, \ldots, \frac{d^nf}{db^n} - l_n \mid x-a, y-b\right)^n$$

$$+ \frac{1}{(n-1)!}(e_0, e_1, \ldots, e_n \mid x-a, y-b)^n, \quad (4)$$

where $$ne_r = (n-r)e'_r + re''_r,$$

for all values of r, e_n and e''_0 having the value zero each; thus the e's have zero as unique double limit when h and k approach zero in any manner whatever.

But $$\frac{x-a}{h} = \frac{y-b}{k},$$

so that, from (4),

$$(l_0, l_1, \ldots, l_n)(h, k)^n = \left(\frac{d^n f}{da^n}, \ldots)(h, k\right)^n + E_n,$$

substituting which in (1), the required expansion follows.

This proves the theorem when $n = 3$. For in this case we are given that f_{xx}, f_{xy}, f_{yy} have first differentials at the point, so that, by Theorem 3, f_x and f_y have the second expansion property required in the above proof.

If $n > 3$, the theorem will be proved if we are able to shew that f_x and f_y possess the $(n-1)$-th expansion property.

Proceeding on the same lines as before, we reduce the task of shewing that this is the case to that of proving that f_{xx}, f_{xy} and f_{yy} possess the $(n-2)$-th expansion property. We know, in fact, that f_x and f_y have $(n-2)$-th differentials at (a, b), since f has an $(n-1)$-th differential at that point. Therefore, since $n-2 > 1$, f_x and f_y have second differentials at (a, b); and therefore, by the definition, first differentials in a closed neighbourhood of (a, b), which is required for the application of the lemma. Also we know that f_{xx}, f_{xy} and f_{yy} have $(n-3)$-rd differentials, since f has an $(n-1)$-th differential at (a, b). Hence the argument already used applies *mutatis mutandis*.

Proceeding thus successively we reduce the problem to shewing that the $(n-2)$-th partial differential coefficients have the second expansion property, which follows by Theorem 2, since we are given that their differential coefficients have first differentials at (a, b).

Thus in any case the theorem is demonstrated.

COR.—*If f possesses an n-th differential at the point (a, b), then*

$$f(a+h, b+k) = f(ab) + df + \frac{1}{2!}d^2f + \ldots + \frac{1}{n!}d^nf + \frac{1}{n!}E_n.$$

Note.—It should be noticed that we can materially simplify the enunciation of the theorem, and say simply that *the n-th expansion theorem holds for the function $f(x, y)$ if its $(n-1)$-th differential coefficients*

$$\frac{d^{n-1}f}{dx^{n-r}dy^{r-1}} \quad [r = 2, \ldots, (n-1)],$$

have first differentials at (a, b). In fact, it follows that these differential

coefficients are all continuous with respect to (x, y) at the point (a, b); and therefore by Theorem 1, Cor., f has an $(n-1)$-th differential at the point (a, b). Moreover, it is a natural gloss to interpret the expression "a function $\frac{d^{n-1}f}{dx^{n-r}dy^{r-1}}$ has an $(n-1)$-th differential," to mean that the mixed differential coefficient in question is the representative of a whole set of *equal* mixed differential coefficients, in other words, that the order of partial differentiation is immaterial.

13. Before discussing the second of the two expansion theorems, we must refer again briefly to another matter already mooted in the introduction.

When we consider a function of two, or more, variables, the question arises, if we put for the variables functions of t which have differential coefficients of every order—

(1) Can we use the usual rule

$$\frac{d}{dt} = \dot{x}\frac{d}{dx} + \dot{y}\frac{d}{dy} + \ldots$$

at each successive stage?

(2) If this is allowable, what can we say about the form of the successive differential coefficients with respect to t?

Taking a function of two variables $f(x, y)$, if it has a first differential we can of course write

$$\frac{df}{dt} = \dot{x}\frac{df}{dx} + \dot{y}\frac{df}{dy}. \tag{1}$$

If this equation holds also throughout a closed neighbourhood of the point P and a second differential coefficient with respect to t exists, we can of course differentiate both sides with respect to t. On the left we get d^2f/dt^2; can we apply the rule on the right?

Clearly if, and only if, df/dx and df/dy have first differentials at the point P; in other words, according to our definition, if f has a second differential at P. This is therefore the necessary and sufficient condition that we may be able to apply the rule a second time.

Similarly, *we may differentiate by the usual rule n times if, and only if, f has an n-th differential at the point.*

What form will the result of the successive operations on the right-hand side of (1) take?

The result of § 6 enables us to say that it is bound to take the simplest

form possible. At each stage the order of the successive differentiations with respect to x and y will be immaterial, and we may write

$$\frac{d^2f}{dt^2} = \dot{x}^2\frac{d^2f}{dx^2} + 2\dot{x}\dot{y}\frac{d^2f}{dx\,dy} + \dot{y}^2\frac{d^2f}{dy^2} + \ddot{x}\frac{df}{dx} + \ddot{y}\frac{df}{dy}$$

$$= \left(\frac{d^2f}{dx^2}, \ldots \times \dot{x}, \dot{y}\right)^2 + \ddot{x}f_x + \ddot{y}f_y, \qquad (2$$

$$\frac{d^3f}{dt^3} = \left(\frac{d^3f}{dx^3}, \ldots \times \dot{x}, \dot{y}\right)^3 + \text{terms involving } \ddot{x}, \ddot{y}, \ldots,$$

in which again no distinction is to be made between mixed partial differential coefficients which differ only in the order of the differentiations.

This appears to be a material simplification of the theory. According to the previous state of knowledge of the subject, for this to be the case we should have had to predicate not only the existence of the n-th differentials, but the continuity of all the mixed differential coefficients which occur in its expression before we should be able to assert that it would take this simple form.

14. We now proceed to obtain the generalisation of the remainder form of Taylor's theorem for the case of a function of several variables.

THEOREM 5.—*If f possesses all its differentials up to the $(n-1)$-th inclusive in a closed neighbourhood of the point (a, b), and an n-th differential exists in the open neighbourhood, that is, the closed neighbourhood, omitting the point (a, b), then, the point (x, y) being in that open neighbourhood,*

$$f(x, y) = f(a, b) + [f_a(x-a) + f_b(y-b)] + \ldots$$

$$+ \frac{1}{(n-1)!}\left(\frac{d^{n-1}f}{da^{n-1}}, \ldots \times x-a,\ y-b\right)^{n-1}$$

$$+ \frac{1}{n!}\left(\frac{d^nf}{d\xi^n}, \ldots \times x-a, y-b\right)^{n-1},$$

where (ξ, η) is an internal point of the stretch from (a, b) to (x, y).

To prove this, consider the function $f(a+ut, b+vt) = F(t)$ say, where u and v are constants for the purposes of the investigation. Then we may apply the one-dimensional Taylor's theorem in its remainder form to

the function $F(t)$,

$$F(t) = F(0)+tF'(0)+\ldots+\frac{1}{(n-1)!}t^{n-1}F^{n-1}(0)+\frac{1}{n!}t^nF^n(\tau),$$

where $$0<\tau<t.$$

But, by the preceding article,

$$F'(t) = u\frac{df}{dx}+v\frac{df}{dy},$$

$$F''(t) = \left(u\frac{d}{dx}+v\frac{d}{dy}\right)^2 f,$$

$$\ldots \quad \ldots \quad \ldots \quad \ldots$$

$$F^r(t) = \left(u\frac{d}{dx}+v\frac{d}{dy}\right)^r f,$$

We have to find the values of these expressions when $t=0$. We have obviously only to write a for x and b for y. Hence

$$F(t) = f+t\left(u\frac{d}{da}+v\frac{d}{db}\right)f+\ldots+\frac{1}{(n-1)!}t^{n-1}\left(u\frac{d}{da}+v\frac{d}{db}\right)^{n-1}f$$

$$+\frac{1}{n!}t^n\left(u\frac{d}{d\xi}+v\frac{d}{d\eta}\right)^n f(\xi,\eta).$$

Hence, finally, putting $ut=x-a$, $vt=y-b$, we get the required result.

It should be noticed that this is a much more general result than that usually given under the name of Cauchy's theorem, which requires the continuity of all the n-th differential coefficients.

We have used Lagrange's form of the remainder theorem for one variable; the same argument, word for word, applies if we take the Schlömilch-Roche form. It is also obvious that the various other generalisations,* have their immediate counterpart. It is hardly necessary to add that the whole argument applies whatever be the number of variables.

* *E.g.*, such generalisations as those given in a "Note on a Remainder Form of Taylor's Theorem," 1909, *Quar. Jour. of Math*,, Vol. XL., pp. 146–153.

15. THEOREM 6.—*If*

$$g(a, b) = 0,\ g(A, B) = 0,\ g_a = 0,\ g_b = 0,\ g_{aa} = 0,\ g_{ab} = 0,\ g_{bb} = 0, \ldots,$$

up to differential coefficients of the $(r-1)$*-th order, and if* g *has an* r*-th differential in the open neighbourhood of the point* (a, b)*, so that* $d^r g/dt^r$ *may be written down in the usual way symbolically,* then*

$$\left((x-a)\frac{d}{dx}+(y-b)\frac{d}{dy}\right)^r g = 0,$$

at some point (x, y) *internal to the stretch joining* (a, b) *and* (A, B).

This follows at once from the remainder form of Taylor's theorem for two variables proved in § 14. We have, in fact, merely to substitute A, B for x and y in the expression there found, and then use the fact that

$$\frac{x-a}{A-a} = \frac{y-b}{B-b}.$$

This theorem enables us to give an alternative and somewhat simpler form of proof of the Cor. to Theorem 4.

THEOREM 4. COR.—(*Alternative proof.*)—*If* f *has an* n*-th differential at the point* (a, b),

$$f(a+h, b+k) = f(a, b)+df+\tfrac{1}{2}d^2f+\ldots+\frac{1}{n!}d^nf+\frac{1}{n!}E_n,$$

where $$E_n = (e_0, e_1, \ldots, e_n \between h, k)^n,$$

and the e's have zero as unique double limit when h *and* k *approach zero in any manner whatever.*

Let $l_0, l_1, \ldots, l_n$ be any functions of a, b, h and k, such that, identically,

$$0 = f(a+h, b+k)-f(a, b)-df-\tfrac{1}{2}d^2f-\ldots$$
$$-\frac{1}{(n-1)!}d^{n-1}f-\frac{1}{n!}(l_0, l_1, \ldots, l_n \between h, k)^n, \quad (1)$$

and put

$$g(x, y) = f(x, y)-f(a, b)-\left(\frac{df}{da}(x-a)+\frac{df}{db}(y-b)\right)-\ldots$$
$$-\frac{1}{(n-1)!}\left(\frac{d^{n-1}f}{da^{n-1}}, \ldots \between x-a, y-b\right)^{n-1}-\frac{1}{n!}(l_0, l_1, \ldots, l_n \between x-a, y-b)^n, \quad (2)$$

* We have, of course, first to expand $\left(u\frac{d}{dx}+v\frac{d}{dy}\right)^r$ by the binomial theorem, and then substitute $(x-a)$ and $(y-b)$ for u and v.

so that $$g(a, b) = 0,$$

and, by (1), $$g(a+h, b+k) = 0.$$

Also g_x, g_y, and all differential partial coefficients up to the $(n-1)$-th inclusive have the value zero at the point (a, b). Further, $g(x, y)$, like $f(x, y)$, possesses an n-th differential at the point (a, b), and therefore an $(n-1)$-th differential in the neighbourhood. Hence we may apply Theorem 6, so that there is a point (x, y) internal to the stretch from (a, b) to $(a+h, b+k)$, such that

$$\left(\frac{d^{n-1}g}{dx^{n-1}}, \ldots \mathcal{X} x-a, y-b\right)^{n-1} = 0. \tag{3}$$

Hence, substituting for g by means of (2), we have, symbolically,

$$\left((x-a)\frac{d}{dx}+(y-b)\frac{d}{dy}\right)^{n-1} f - \left((x-a)\frac{d}{da}+(y-b)\frac{d}{db}\right)^{n-1} f$$
$$-(l_0, l_1, \ldots \mathcal{X} x-a, y-b)^n = 0. \tag{4}$$

Now, since f has an n-th differential at the point (a, b), the $(n-1)$-th differential coefficients of f have, by definition, first differentials at the point (a, b). Hence we can write

$$\frac{d^{n-1}f}{dx^{n-1}} - \frac{d^{n-1}f}{da^{n-1}} = (x-a)\left(\frac{d^nf}{da^n}+\eta_{00}\right)+(y-b)\left(\frac{d^nf}{da^{n-1}db}+\eta_{01}\right),$$

$$\frac{d^{n-1}f}{dx^{n-2}dy} - \frac{d^{n-2}f}{da^{n-2}db} = (x-a)\left(\frac{d^nf}{da^{n-1}db}+\eta_{10}\right)+(y-b)\left(\frac{d^nf}{da^{n-2}db^2}+\eta_{11}\right),$$

... ...,

where the η's have zero as unique double limit when (x, y) approaches (a, b); and therefore when h and k approach zero in any manner whatever.

Hence, putting $$\eta_{00} = e_0, \quad \eta_{01}+(n+1)\eta_{10} = e_1,$$
$$(n-1)\eta_{11}+\frac{(n-1)(n-2)}{2!}\eta_{20} = e_2,$$
... ...,

so that the e's, like the η's, have zero for double limit, the first two of the three terms of (4) reduce to

$$\left((x-a)\frac{d}{da}+(y-b)\frac{d}{db}\right)^n f + (e_0, e_1, \ldots, e_n \mathcal{X} x-a, y-b)^n.$$

Substituting this for the two terms in question in equation (4) it becomes homogeneous in form in $(x-a)$ and $(y-b)$. Hence, remembering that

$$\frac{x-a}{h} = \frac{y-b}{k},$$

we obtain $$\left(h\frac{d}{da}+k\frac{d}{db}\right)^n f+E_n = (l_0, l_1, \ldots, l_n)(h, k)^n.$$

Substituting for the expression on the right-hand side of this equation in (1), and writing $d^n f$ for $\left(h\frac{d}{da}+k\frac{d}{db}\right)^n f$, which we can do, since f has an n-th differential, the required result follows.

THE THEORY OF CAUCHY'S PRINCIPAL VALUES. (FOURTH PAPER: *The Integration of Principal Values*—CONTINUED—*with Applications to the Inversion of Definite Integrals*)

By G. H. HARDY.

[Received November 30th, 1908.—Read December 10th, 1908.]

I.

Introductory.

1. This paper is designed to supplement and complete three papers published under the same title in 1901–2.* In these three papers I considered in detail a number of questions connected with principal values, and in particular the questions of the continuity, differentiation, and integration of principal values which involve a continuous parameter. In the last of them I began to consider the equation

$$(1) \qquad P\int_a^A dx\, P\int_b^B f(x, y)\, dy = P\int_b^B dy\, P\int_a^A f(x, y)\, dx,$$

where $f(x, y)$ is a function affected with singularities of a special form. It will probably be convenient for me to repeat the principal results at which I arrived. I shall confine myself at present to the case in which all the limits are finite, and I shall simplify the statement of the results by the introduction of certain definitions.

I shall call a straight line parallel to either axis *a standard curve of the first kind*, or, more shortly, *a line* C_1. A curve of continuous curvature, whose tangent is nowhere parallel to either axis, I shall call *a standard curve of the second kind*, or *a line* C_2. Such a curve has the property that its equation may be expressed in either of the forms

$$y = X(x), \qquad x = Y(y),$$

where X and Y are functions whose first two derivatives are continuous and whose first derivatives do not vanish for any value of x or y in question. The simplest example of such a curve is the line $x = y$.

It generally happens, in cases which lead to applications of any interest,

* *Proceedings* (*Old Series*), Vol. xxxiv., p. 16 and p. 55, and Vol. xxxv., p. 81.

that the discontinuities of f lie on a finite number of lines C_1 or C_2. Occasionally a line of discontinuities presents itself which violates the conditions for a line C_2 in that its tangent is parallel to an axis at a finite number of points. This case is not considered in the general theorems which follow, and additional investigation is necessary when it occurs.

2. In my third paper I dealt with the case in which no two singular curves intersect. I first proved that—

(i.) *If f is a continuous function of both variables, except along a finite number of lines C_1 parallel to the axis of y, and if*

$$P\int_a^A f\,dx$$

is uniformly convergent in (b, B), then

$$P\int_a^A dx\int_b^B f\,dy = \int_b^B dy\,P\int_a^A f\,dx. \tag{2}$$

In other words, the equation (1) holds, but two of the symbols of the principal value contained in it are unnecessary.

The simplest case of this theorem is that in which

$$f = \frac{\Theta(x, y)}{x-\alpha},$$

where $a < \alpha < A$, and Θ is a function continuous without exception, together with its first derivative Θ_x. If all the first and second derivatives of Θ are continuous I shall say that f has a *standard discontinuity* along the line $x = \alpha$. Similarly I shall say that f has a standard discontinuity along the line C_2 represented by the equations

$$y = X(x), \qquad x = Y(y),$$

if it is capable of expression in the forms

$$\frac{\Theta(x, y)}{y-X}, \qquad \frac{\Phi(x, y)}{x-Y},$$

where Θ and Φ, together with all their first and second derivatives, are continuous without exception.

With this notation, my second result was

(ii.) *If f, together with all its first and second derivatives, is continuous throughout (a, A, b, B), except that it has standard discontinuities*

along a finite number of non-intersecting lines C_2, then

$$(3) \qquad \int_a^A dx\, P \int_b^B f\, dy = \int_b^B dy\, P \int_a^A f\, dx.$$

Here, again, it will be noticed, only two symbols of the principal value are necessary, but these are not the same two as in equation (2).*

3. By a combination of Theorems (i.) and (ii.), and the theorem which results from (i.) when x and y are interchanged, we can deal with all cases of interest in which no two curves of discontinuity intersect. The really interesting case, however, is that in which there are such intersections. It is clear that, by dividing up the rectangle of integration, we can reduce this case to that in which there is only *one* intersection; and this case can be subdivided into three, according as the intersecting curves are (*a*) two lines C_1, (*b*) two lines C_2, or (*c*) a line C_1 and a line C_2.

With case (*a*) I dealt in my third paper, by means of the theorem

(iii.) *If* $$f = \Theta / \{(x-\alpha)(y-\beta)\},$$

where $a < \alpha < A$, $b < \beta < B$, *and* Θ, *together with all its first and second derivatives, is continuous without exception, then*

$$(4) \qquad P \int_a^A dx\, P \int_b^B f\, dy = P \int_b^B dy\, P \int_a^A f\, dx.$$

In other words, (1) holds provided *all* the signs of the principal value are retained.

4. I shall now proceed to consider cases (*b*) and (*c*). As regards the former, I indicated my result in general terms at the end of my third paper. If

$$f = \psi / \lambda\mu,$$

$\lambda = 0$ and $\mu = 0$ being the curves of discontinuity, then (1) may be true, or it may be untrue, the difference, in the latter case, between the two sides of the equation being

$$\frac{2\pi^2 \psi(\alpha, \beta)}{\frac{\partial(\lambda, \mu)}{\partial(\alpha, \beta)}},$$

* I considered before the case in which f is of the form

$$\frac{\Theta}{y-X} \left\{ \log\left(\frac{1}{y-X}\right) \right\}^{a_1} \left\{ \log\log\left(\frac{1}{y-X}\right) \right\}^{a_2} \ldots;$$

but this more general case will not concern us in this paper.

where α, β are the coordinates of the point of intersection, supposed to lie *inside* (a, A, b, B).* This result I shall now proceed to define more precisely and to prove. I have had the outlines of the proof in my hands for years, but have never published it, as it was only recently that I realised what interesting applications the result has to the problem of the inversion of a definite integral, which has been so prominent in recent mathematical literature.

II.

Proofs of the General Theorems.

5. Let us suppose that

$$a = b = -1, \qquad A = B = 1,$$

and that the point of intersection of the singular curves is (0, 0). It is clear that these hypotheses do not involve any real loss of generality.

If ϵ and ϵ' are any positive numbers, however small, we have, by Theorem 2 above, the equations

$$\int_{-1}^{1} dx\, P \int_{\epsilon}^{1} f\, dy = \int_{\epsilon}^{1} dy\, P \int_{-1}^{1} f\, dx, \qquad \int_{-1}^{1} dx\, P \int_{-1}^{-\epsilon'} f\, dy = \int_{-1}^{-\epsilon'} dy\, P \int_{-1}^{1} f\, dx.$$

Hence

$$(1) \qquad \int_{-1}^{1} dx\, P \int_{-1}^{1} f\, dy = \left(\int_{-1}^{-\epsilon'} + \int_{\epsilon}^{1} \right) dy\, P \int_{-1}^{1} f\, dx + \Delta(\epsilon, \epsilon'),$$

where

$$(2) \qquad \Delta(\epsilon, \epsilon') = \int_{-1}^{1} dx\, P \int_{-\epsilon'}^{\epsilon} f\, dy,$$

provided only that this last expression has a meaning. If this is so, and if we can prove that when ϵ and ϵ' tend independently to zero, $\Delta(\epsilon, \epsilon')$ tends to a limit Δ, we shall arrive at the equation

$$(3) \qquad \int_{-1}^{1} dx\, P \int_{-1}^{1} f\, dy = \int_{-1}^{1} dy\, P \int_{-1}^{1} f\, dx + \Delta.$$

Evaluation of Δ.

6. Let ρ and ρ' be small positive numbers. Then

$$\Delta(\epsilon, \epsilon') = J + J' + \Delta(\rho, \rho', \epsilon, \epsilon'),$$

* We shall consider later on the case of an intersection *on the boundary* of the rectangle.

where $$J = \int_{\rho}^{1} dx\, P \int_{-\epsilon'}^{\epsilon} f\, dy, \qquad J' = \int_{-1}^{-\rho'} dx\, P \int_{-\epsilon'}^{\epsilon} f\, dy,$$

and $$\Delta(\rho, \rho', \epsilon, \epsilon') = \int_{-\rho'}^{\rho} dx\, P \int_{-\epsilon'}^{\epsilon} f\, dy,$$

provided only that this last expression has a meaning.

Now, by Theorem 2, we have

$$J = \int_{-\epsilon'}^{\epsilon} dy\, P \int_{\rho}^{1} f\, dx\,;$$

and therefore, when ρ is fixed, we can, given any positive number σ, so choose η that

$$|J| < \sigma,$$

for $0 < \epsilon \leqslant \eta$, $0 < \epsilon' \leqslant \eta$. Similarly, we can ensure that $|J'| < \sigma$.

I shall call a function $\phi(\rho, \rho', \epsilon, \epsilon')$ *negligible* if it tends to the limit zero when ρ, ρ', ϵ, and ϵ' tend independently to zero; that is to say if, given any positive number σ, we can choose ξ and η, so that $|\phi| < \sigma$ for $0 < \rho \leqslant \xi$, $0 < \rho' \leqslant \xi$, $0 < \epsilon \leqslant \eta$, $0 < \epsilon' \leqslant \eta$. In particular ϕ is negligible if, when ρ and ρ' have any fixed values, $\phi \to 0$ with ϵ and ϵ', uniformly for all pairs of sufficiently small values of ρ and ρ'. For example, J and J' are negligible.

Now let us assume for a moment that we have proved that

$$\Delta(\rho, \rho', \epsilon, \epsilon') = \Delta + \delta_1 + \delta_2 + \ldots + \delta_k, \tag{4}$$

where Δ is a constant and δ_s a negligible function. Then

$$|\Delta(\epsilon, \epsilon') - \Delta| \leqslant |J| + |J'| + \sum_{s=1}^{k} |\delta_s|.$$

Given σ we can choose ξ and η, so that

$$|J| < \frac{\sigma}{k+2}, \qquad |J'| < \frac{\sigma}{k+2}, \qquad |\delta_s| < \frac{\sigma}{k+2},$$

for $0 < \rho \leqslant \xi$, $0 < \rho' \leqslant \xi$, $0 < \epsilon \leqslant \eta$, $0 < \epsilon' \leqslant \eta$; and then

$$|\Delta(\epsilon, \epsilon') - \Delta| < \sigma,$$

so that $\Delta(\epsilon, \epsilon') \to \Delta$ as $\epsilon \to 0$, $\epsilon' \to 0$.

Thus, in order to establish the truth of the equation (3), all that is necessary is to express $\Delta(\rho, \rho', \epsilon, \epsilon')$ in the form (4).

7. We are supposing that $\lambda = 0$, $\mu = 0$ are the curves of discontinuity, and that they intersect without touching at the origin; further, that

$$f = \frac{\psi}{\lambda\mu} = \frac{\phi(x, y)}{\{y - X_1(x)\}\{y - X_2(x)\}},$$

where ψ, ϕ, λ, μ are functions of x and y, continuous, with all their first and second derivatives, throughout the rectangle of integration. Also X_1', X_2' are of constant sign, and $X_1'(0) \neq X_2'(0)$; and X_1'', X_2'' are continuous.

We shall write $$\phi(x, y) = \phi(x, 0) + y\phi_1(x, y),$$

so that $$\phi_1(x, y) = \{\phi(x, y) - \phi(x, 0)\}/y = \frac{\partial\phi(x, \theta y)}{\partial y} \quad (0 < \theta < 1),$$

and $$\frac{\partial\phi_1}{\partial y} = -\frac{1}{y^2}\left\{\phi(x, y) - \phi(x, 0) - y\frac{\partial\phi(x, y)}{\partial y}\right\}$$

$$= \frac{\partial^2\phi(x, \theta y)}{\partial y^2} - \tfrac{1}{2}\frac{\partial^2(x, \theta' y)}{\partial y^2},$$

where $0 < \theta < 1$, $0 < \theta' < 1$. From these equations it follows that $\partial\phi_1/\partial y$ is continuous, and

$$|\phi_1| < K, \qquad \left|\frac{\partial\phi_1}{\partial y}\right| < K.$$

8. Let $$\Delta(\rho, \rho', \epsilon, \epsilon') = \Delta_0 + \Delta_1,$$

where Δ_0 and Δ_1 are obtained from Δ by replacing ϕ by $\phi(x, 0)$ and by $y\phi_1(x, y)$ respectively. We shall prove first that Δ_1 is well defined and negligible. We have

$$\Delta_1 = \int_{-\rho'}^{\rho} dx\, P\int_{-\epsilon'}^{\epsilon} \frac{y\phi_1(x, y)\, dy}{(y - X_1)(y - X_2)} = \int_{-\rho'}^{\rho} \chi(x, \epsilon, \epsilon')\, dx,$$

say. Since $$\frac{\partial}{\partial y}\{y\phi_1(x, y)\} = \frac{\partial\phi(x, y)}{\partial y}$$

is continuous, $\chi(x, \epsilon, \epsilon')$ is defined for all values of ϵ and ϵ'. Also, in virtue of what was proved in the last section concerning $\partial\phi_1/\partial y$, we may integrate by parts, and obtain

$$\chi(x, \epsilon, \epsilon') = \frac{1}{2(X_1 - X_2)}\Big[\quad \phi_1(x, \epsilon)\ \{X_1 \log(\epsilon - X_1)^2 - X_2 \log(\epsilon - X_2)^2\}$$

$$-\phi_1(x, -\epsilon')\{X_1 \log(\epsilon' + X_1)^2 - X_2 \log(\epsilon' + X_2)^2\}$$

$$-\int_{-\epsilon'}^{\epsilon} \frac{\partial\phi_1}{\partial y}\{X_1 \log(y - X_1)^2 - X_2 \log(y - X_2)^2\}\, dy\Big].$$

Now $$\left|\frac{X_1}{X_1 - X_2}\right| < K, \qquad \left|\frac{X_2}{X_1 - X_2}\right| < K,$$

for $-\rho' \leqslant x \leqslant \rho$. Hence the integrated part of $\chi(x, \epsilon, \epsilon')$ is in absolute value less than KM, where

$$M = |\log(\epsilon - X_1)^2| + |\log(\epsilon - X_2)^2| + |\log(\epsilon' + X_1)^2| + |\log(\epsilon' + X_2)^2|.$$

The remaining part of $\chi(x, \epsilon, \epsilon')$ is in absolute value less than

$$K\int_{-\epsilon'}^{\epsilon} \{|\log(y - X_1)^2| + |\log(y - X_2)^2|\}\, dy.$$

But $$\int_{-\epsilon'}^{\epsilon} |\log(y - X_1)^2|\, dy = -\int_{-\epsilon'}^{\epsilon} \log(y - X_1)^2\, dy$$

$$= -(\epsilon - X_1)\log(\epsilon - X_1)^2 - (\epsilon' + X_1)\log(\epsilon' + X_1)^2 + 2(\epsilon + \epsilon'),$$

which is certainly less than KM. Similarly

$$\int_{-\epsilon'}^{\epsilon} |\log(y - X_2)^2|\, dy < KM.$$

Hence, finally, $$|\chi(\epsilon, \epsilon')| < KM.$$

From this it follows that Δ_1 is well defined. Also

$$|\Delta_1| < K\int_{-\rho'}^{\rho} M\, dx.$$

But the last integral consists of four parts of which one is

$$\int_{-\rho'}^{\rho} |\log(\epsilon - X_1)^2|\, dx = -\int_{-\rho'}^{\rho} \log(\epsilon - X_1)^2\, dx.$$

In this last integral make the substitution $X_1(x) = u$. We know that X_1' is of constant sign, say positive ; then X_1' lies between certain positive limits, and

$$-\int_{-\rho'}^{\rho} \log(\epsilon - X_1)^2\, dx < -K\int_{-\varpi'}^{\varpi} \log(\epsilon - u)^2\, du,$$

where ϖ and ϖ' are functions of ρ and ρ' respectively, such that

$$\lim_{\rho \to 0} \frac{\varpi}{\rho} = \lim_{\rho' \to 0} \frac{\varpi'}{\rho'} = X_1'(0).$$

Hence

$$\int_{-\rho'}^{\rho} |\log(\epsilon - X_1)^2|\, dx$$

$$< -K\{(\varpi - \epsilon)\log(\varpi - \epsilon)^2 + (\varpi' + \epsilon)\log(\varpi' + \epsilon)^2 - 2\varpi - 2\varpi'\},$$

and this last function is plainly negligible. Similarly for the other three

integrals which also form part of

$$\int_{-\rho'}^{\rho} M\,dx\,;$$

and so this integral is negligible, and therefore $\Delta_1(\rho, \rho', \epsilon, \epsilon')$ is negligible.

9. We may therefore consider, instead of Δ, the function Δ_0 defined by the equation

$$\Delta_0(\rho, \rho', \epsilon, \epsilon') = \int_{-\rho'}^{\rho} \phi(x, 0)\,dx\; P\int_{-\epsilon'}^{\epsilon} \frac{dy}{(y-X_1)(y-X_2)}$$

$$= \tfrac{1}{2}\int_{-\rho'}^{\rho} \log\left(\frac{\epsilon-X_1}{\epsilon-X_2}\,\frac{\epsilon'+X_2}{\epsilon'+X_1}\right)^2 \frac{\phi(x, 0)\,dx}{X_1-X_2}\,.$$

The last integral is plainly convergent; and so Δ_0 is well defined. This remark completes the proof that $\Delta(\rho, \rho', \epsilon, \epsilon')$ is well defined.

Now let

$$\phi(x, 0) = \phi(0, 0)+\phi_2(x, 0)$$

and let

$$\Delta_0 = \Delta_{0,0}+\Delta_2,$$

where $\Delta_{0,0}$ and Δ_2 denote the functions deduced from Δ_0 by replacing $\phi(x, 0)$ by $\phi(0, 0)$ and $\phi_2(x, 0)$ respectively. Then

$$|\phi_2| < K|x|, \qquad \left|\frac{\phi_2}{X_1-X_2}\right| < K\,;$$

and so

$$|\Delta_2| < K\int_{-\rho'}^{\rho} M\,dx.$$

It therefore follows, from the work of the last section, that Δ_2, like Δ_1, is negligible.

10. It remains to consider

$$\Delta_{0,0}(\rho, \rho', \epsilon, \epsilon') = \tfrac{1}{2}\phi(0, 0)\int_{-\rho'}^{\rho} \log\left(\frac{\epsilon-X_1}{\epsilon-X_2}\,\frac{\epsilon'+X_2}{\epsilon'+X_1}\right)^2 \frac{dx}{X_1-X_2}\,.$$

We write

$$\gamma_1 = X_1'(0), \quad \gamma_2 = X_2'(0), \quad \frac{1}{X_1-X_2} = \frac{1}{(\gamma_1-\gamma_2)x} + \Xi(x).$$

Then

$$|\Xi(x)| < K\,;$$

and if

$$\Delta_{0,0} = \bar{\Delta}+\Delta',$$

$\bar{\Delta}$ and Δ' being formed from $\Delta_{0,0}$ by replacing $1/(X_1-X_2)$ by $1/\{(\gamma_1-\gamma_2)x\}$ and $\Xi(x)$ respectively, we can prove that Δ' is negligible by the same method that we used for Δ_1 and Δ_2.

11. We remain with

$$\bar{\Delta}(\rho;\rho',\epsilon,\epsilon') = \frac{\phi(0,0)}{2(\gamma_1-\gamma_2)}\int_{-\rho'}^{\rho}\log\left(\frac{\epsilon-X_1}{\epsilon-X_2}\,\frac{\epsilon'+X_2}{\epsilon'+X_1}\right)^2\frac{dx}{x} = \frac{\phi(0,0)}{2(\gamma_1-\gamma_2)}\,(j_1-j_2),$$

where $$j_1 = P\int_{-\rho'}^{\rho}\log\left(\frac{\epsilon-X_1}{\epsilon'+X_1}\right)^2\frac{dx}{x}, \qquad j_2 = P\int_{-\rho'}^{\rho}\log\left(\frac{\epsilon-X_2}{\epsilon'+X_2}\right)^2\frac{dx}{x}.$$

It is to be observed that neither j_1 nor j_2 is convergent if the sign of the principal value is removed, except in the particular case in which $\epsilon=\epsilon'$.

To j_1 let us supply the substitution $X_1(x)=u$.* We obtain

$$j_1 = P\int_{-\varpi'}^{\varpi}\log\left(\frac{\epsilon-u}{\epsilon'+u}\right)^2\frac{du}{xX_1'(x)} = j_1'+j_1'',$$

where $$j_1' = P\int_{-\varpi'}^{\varpi}\log\left(\frac{\epsilon-u}{\epsilon'+u}\right)^2\frac{du}{u}, \qquad j_1'' = \int_{-\varpi'}^{\varpi}\log\left(\frac{\epsilon-u}{\epsilon'+u}\right)^2 R\,du,$$

and $$R = \frac{1}{xX_1'(x)} - \frac{1}{u},$$

so that $|R|<K$. The integral j_1'' may now be shown to be negligible by a mere repetition of some of our previous arguments. And, of course, j_2 may be treated in the same way as j_1.

12. We have now only to consider

$$\bar{\Delta}_0(\rho,\rho',\epsilon,\epsilon') = \frac{\phi(0,0)}{2(\gamma_1-\gamma_2)}\,(j_1'-j_2'),$$

where $$j_1' = P\int_{-\varpi'}^{\varpi}\log\left(\frac{\epsilon-u}{\epsilon'+u}\right)^2\frac{du}{u}, \qquad j_2' = P\int_{-\bar{\varpi}'}^{\bar{\varpi}}\log\left(\frac{\epsilon-u}{\epsilon'+u}\right)^2\frac{du}{u},$$

ϖ, ϖ', $\bar{\varpi}$, $\bar{\varpi}'$ being numbers such that

$$\varpi/\rho\to\gamma_1, \qquad \varpi'/\rho'\to\gamma_1, \qquad \bar{\varpi}/\rho\to\gamma_2, \qquad \bar{\varpi}'/\rho'\to\gamma_2,$$

as ρ and ρ' tend to zero.

Let τ be a positive number less than the least of the moduli of ϖ, ϖ', $\bar{\varpi}$, and $\bar{\varpi}'$. If α denotes any one of the four latter numbers that is positive, and β any one of them that is negative, it is clear that, when once ρ, ρ', and τ have been determined, the integrals

$$\int_{\tau}^{\alpha}\log\left(\frac{\epsilon-u}{\epsilon'+u}\right)^2\frac{du}{u}, \qquad \int_{\beta}^{-\tau}\log\left(\frac{\epsilon-u}{\epsilon'+u}\right)^2\frac{du}{u}$$

* The ordinary process of substitution may be employed, since X_1 and its first two derivatives are continuous. See my first paper of this series, pp. 33 *et seq.*

tend to zero with ϵ and ϵ', and are therefore negligible. Hence we may replace $\bar{\Delta}_0$ by

$$\bar{\Delta} = \frac{\phi(0,0)}{2(\gamma_1-\gamma_2)}\ (i_1-i_2),$$

where

$$i_1 = P\int_{-\tau\,\mathrm{sgn}\,\gamma_1}^{\tau\,\mathrm{sgn}\,\gamma_1} \log\left(\frac{\epsilon-u}{\epsilon'+u}\right)^2 \frac{du}{u}, \qquad i_2 = P\int_{-\tau\,\mathrm{sgn}\,\gamma_2}^{\tau\,\mathrm{sgn}\,\gamma_2} \log\left(\frac{\epsilon-u}{\epsilon'+u}\right)^2 \frac{du}{u}.$$

13. If γ_1 and γ_2 have the same sign

$$i_1 = i_2, \quad \bar{\Delta} = 0, \quad \text{and} \quad \Delta(\epsilon,\epsilon') \to \Delta = 0.$$

If they have opposite signs, let γ_1, say, be positive. Then

$$\begin{aligned} i_1-i_2 &= 2P\int_{-\tau}^{\tau} \log\left(\frac{\epsilon-u}{\epsilon'+u}\right)^2 \frac{du}{u} \\ &= 2\int_0^{\tau} \log\left(\frac{\epsilon-u}{\epsilon+u}\right)^2 \frac{du}{u} + 2\int_0^{\tau} \log\left(\frac{\epsilon'-u}{\epsilon'+u}\right)^2 \frac{du}{u} \\ &= 2\int_0^{\tau/\epsilon} \log\left(\frac{1-u}{1+u}\right)^2 \frac{du}{u} + 2\int_0^{\tau/\epsilon'} \log\left(\frac{1-u}{1+u}\right)^2 \frac{du}{u} \\ &\to 2\int_0^{\infty} \log\left(\frac{1-u}{1+u}\right)^2 \frac{du}{u} \to -2\pi^2. \end{aligned}$$

Thus, in this case $\Delta(\epsilon,\epsilon') \to \Delta = -\dfrac{2\pi^2\,\phi(0,0)}{\gamma_1-\gamma_2}$.

14. But

$$\gamma_1 = \left(\frac{dX_1}{dx}\right)_0 = -\left(\frac{\partial\lambda}{\partial x}\right)_0 \Big/ \left(\frac{\partial\lambda}{\partial y}\right)_0, \qquad \gamma_2 = -\left(\frac{\partial\mu}{\partial x}\right)_0 \Big/ \left(\frac{\partial\mu}{\partial y}\right)_0,$$

$$\phi(0,0) = \psi(0,0)\lim\left(\frac{y-X_1}{\lambda}\ \frac{y-X_2}{\mu}\right) = \psi(0,0)\Big/\left\{\left(\frac{\partial\lambda}{\partial y}\right)_0\left(\frac{\partial\mu}{\partial y}\right)_0\right\}.$$

Hence, finally, Δ is equal to

$$-\{2\pi^2\,\psi(0,0)\}\Big/\left[\frac{\partial(\lambda,\mu)}{\partial(x,y)}\right]_0$$

or to zero. In forming the Jacobian, it is to be observed that $\lambda = 0$ is the curve which makes a positive acute angle with the axis of x.

We can therefore state

THEOREM A.—*If $f(x,y)$, together with all its first and second derivatives, is continuous throughout (a, A, b, B), except that it has standard discontinuities along two standard curves of the second type, $\lambda(x,y) = 0$ and $\mu(x,y) = 0$, which intersect once only, and simply, at the point*

(α, β); *if, further, we express* $f(x, y)$ *in the form* $\psi(x, y)/\lambda(x, y)\,\mu(x, y)$, *then will*

$$\int_a^A dx P\int_b^B f dy = \int_b^B dy P\int_a^A f dx + \Delta,$$

where

$$\Delta = \frac{2\pi^2 \psi(\alpha, \beta)}{\frac{\partial(\lambda, \mu)}{\partial(\alpha, \beta)}},\ 0$$

according as, at the point (α, β), *the tangents of the angles made by the curves* $\lambda = 0$, $\mu = 0$ *with the axis of* x *have not or have the same sign. In the former case it is to be understood that* $\lambda = 0$ *corresponds to the positive sign.*

15. Exceptional cases of this theorem arise when the point (α, β) falls on a side or at a corner of the rectangle (a, A, b, B). It will, however, be convenient to postpone the consideration of these until we have dealt with the case in which a line C_1 and a line C_2 intersect within the rectangle.

We shall suppose that $a = b = -1$, $A = B = 1$, as before, that the line C_1 is $y = 0$, and that $\lambda(x, y) = 0$, the line C_2, passes through the origin, so that $\alpha = 0$, $\beta = 0$, as before. And we shall suppose $f(x, y)$ to be expressed in the form

$$f(x, y) = \frac{\psi(x, y)}{y\lambda(x, y)}.$$

It is clear that, in this case, the sign of the principal value will be required in at least *three* places, viz., before each sign of integration with respect to y and the inner sign of integration with respect to x. We accordingly take $\epsilon = \epsilon'$ (§ 5), and our final equation will be

$$\int_{-1}^{1} dx P\int_{-1}^{1} f dy = P\int_{-1}^{1} dy P\int_{-1}^{1} f dx + \Delta, \tag{5}$$

where

$$\Delta = \lim_{\epsilon \to 0} \Delta(\epsilon) = \lim_{\epsilon \to 0} \int_{-1}^{1} dx P\int_{-\epsilon}^{\epsilon} f dy, \tag{6}$$

provided this limit exists.

16. Our argument now follows very closely the lines of §§ 7–13. We replace $\Delta(\epsilon)$ by

$$\Delta(\rho, \rho', \epsilon) = \int_{-\rho'}^{\rho} dx P\int_{-\epsilon}^{\epsilon} f dy,$$

and $f = \psi/y\lambda$ by $$\frac{\phi(x, y)}{y(y-X_1)},$$

and write $$\phi(x, y) = \phi(x, 0)+y\phi_1(x, y),$$

as in § 7. Then $\Delta(\rho, \rho', \epsilon)$ may be replaced by $\Delta_0+\Delta_1$, where

$$\Delta_0 = \int_{-\rho'}^{\rho} \phi(x, 0)\, dx\, P\int_{-\epsilon}^{\epsilon} \frac{dy}{y(y-X_1)}$$

and $$\Delta_1 = \int_{-\rho'}^{\rho} dx\, P\int_{-\epsilon}^{\epsilon} \frac{\phi_1(x, y)\, dy}{y-X_1},$$

and the last integral is easily proved to be negligible by a slight modification of the argument of § 8.

Again* $$\Delta_0 = \tfrac{1}{2}\int_{-\rho'}^{\rho} \log\left(\frac{\epsilon-X_1}{\epsilon+X_1}\right)^2 \phi(x, 0)\, \frac{dx}{X_1},$$

which we replace by $\Delta_{0,0}+\Delta_2$, where

$$\Delta_{0,0} = \tfrac{1}{2}\phi(0, 0)\int_{-\rho}^{\rho} \log\left(\frac{\epsilon-X_1}{\epsilon+X_1}\right)^2 \frac{dx}{X_1},$$

$$\Delta_2 = \tfrac{1}{2}\int_{-\rho'}^{\rho} \log\left(\frac{\epsilon-X_1}{\epsilon+X_1}\right)^2 \phi_2(x)\, \frac{dx}{X_1},$$

$$\phi_2(x) = \phi(x, 0)-\phi(0, 0).$$

Since $|\phi_2/X_1| < K$, the integral Δ_2 may be shown to be negligible.

Finally, we transform $\Delta_{0,0}$ by the substitution $X_1(x) = u$, and we find (cf. § 12) that it may be replaced by

$$\frac{\phi(0, 0)}{2\gamma_1}\int_{-\tau \operatorname{sgn}\gamma_2}^{\tau \operatorname{sgn}\gamma_1} \log\left(\frac{\epsilon-u}{\epsilon+u}\right)^2 \frac{du}{u},$$

which tends, as $\epsilon \to 0$, to the limit

$$\frac{\phi(0, 0)}{2\gamma_1 \operatorname{sgn}\gamma_1}\int_{-\infty}^{\infty} \log\left(\frac{1-u}{1+u}\right)^2 \frac{du}{u} = -\frac{\pi^2\phi(0, 0)}{|\gamma_1|}.$$

Since $$\gamma_1 = -\left(\frac{\partial\lambda}{\partial x}\right)_0 \Big/ \left(\frac{\partial\lambda}{\partial y}\right)_0, \qquad \phi(0, 0) = \psi(0, 0) \Big/ \left(\frac{\partial\lambda}{\partial y}\right)_0,$$

we find ultimately that

$$\Delta = -\frac{\pi^2\psi(0, 0)}{\left|\frac{\partial\lambda}{\partial x}\right|_0 \operatorname{sgn}\left(\frac{\partial\lambda}{\partial y}\right)_0}.$$

---

* It is here that the importance of having $\epsilon = \epsilon'$ appears. We have

$$P\int_{-\epsilon'}^{\epsilon} \frac{dy}{y(y-X_1)} = \frac{1}{2X_1}\log\left(\frac{\epsilon-X_1}{\epsilon'+X_1}\cdot\frac{\epsilon'}{\epsilon}\right)^2,$$

and the terms involving $\log\epsilon$ and $\log\epsilon'$ would prove intractable.

Hence we obtain

THEOREM B.—*If the conditions of Theorem A are satisfied, except that the curve* $\mu(x, y) = 0$ *is replaced by the straight line* $y = \beta$, *and if*

$$f(x, y) = \frac{\psi(x, y)}{(y-\beta)\,\lambda(x, y)},$$

then will

$$\int_a^A dx P \int_b^B f dy = P \int_b^B dy P \int_a^A f dx + \Delta,$$

where

$$\Delta = -\frac{\pi^2 \psi(\alpha, \beta)}{\left\{\left|\frac{\partial \lambda}{\partial x}\right| \operatorname{sgn}\left(\frac{\partial \lambda}{\partial y}\right)\right\}_{x=\alpha,\, y=\beta}}.$$

It will be seen that

$$\Delta = \pm \frac{\pi^2 \psi(\alpha, \beta)}{\left(\frac{\partial \lambda}{\partial x}\right)_{x=\alpha,\, y=\beta}},$$

where the ambiguous sign is that of γ_1. If $\gamma_1 > 0$,

$$\Delta = \pi^2 \psi(\alpha, \beta) \Big/ \left(\frac{\partial \lambda}{\partial x}\right)_{\alpha, \beta};$$

and, since

$$\frac{\partial(\lambda, y-\beta)}{\partial(x, y)} = \frac{\partial \lambda}{\partial x},$$

we can obtain Δ by the same rule as is prescribed by Theorem A, provided we halve the result. If $\gamma_1 < 0$, we can apply the same rule, but then we must take the two singular curves to be

$$\lambda \equiv y-\beta = 0, \qquad \mu(x, y) = 0.$$

There is, of course, a corresponding theorem for the case in which the line C_1 is $x-\alpha = 0$.

17. The exceptional cases of Theorem A, referred to in § 15, are as follows :—

THEOREM A*a*.—*If the conditions of Theorem A are satisfied, except that* (α, β) *falls on a side, though not at a corner, of the rectangle, then the result of the theorem must be modified by dividing* Δ *by* 2, *and by inserting an additional sign of the principal value—before the outer sign of integration with respect to* x, *if* $\beta = b$ *or* B, *before the outer sign of integration with respect to* y, *if* $\alpha = a$ *or* A.

THEOREM A*b*.—*If, however,* (α, β) *falls at a corner of the rectangle, the repeated integrals cease to be convergent, except in the special case in*

which the singular curves make equal and opposite angles with the axes. In this special case the result of Theorem A still holds if Δ is divided by 4.*

18. *A verification.*—It will, I think, tend to clearness if, before proceeding to applications of these theorems, I verify them on a simple example.

Let $$f(x, y) = 1/\{(y-mx)(y-nx)\},$$

where $m \neq 0$, $n \neq 0$, $m \neq n$. First take $a = b = -1$, $A = B = 1$. Then

$$\int_{-1}^{1} dx\, P\int_{-1}^{1} f\,dy = \frac{1}{2(m-n)}\int_{-1}^{1} \log\left(\frac{1-mx}{1+mx}\cdot\frac{1+nx}{1-nx}\right)^2\frac{dx}{x},$$

$$\int_{-1}^{1} dy\, P\int_{-1}^{1} f\,dx = \frac{1}{2(m-n)}\int_{-1}^{1} \log\left(\frac{y+m}{y-m}\cdot\frac{y-n}{y+n}\right)^2\frac{dy}{y}.$$

The substitution $x = 1/y$ transforms the first of these integrals into

$$-\left(\int_{1}^{\infty} + \int_{-\infty}^{-1}\right)\log\left(\frac{y+m}{y-m}\cdot\frac{y-n}{y+n}\right)^2\frac{dy}{y};$$

and the difference of the two repeated integrals is therefore

$$-\frac{1}{2(m-n)}\int_{-\infty}^{\infty}\log\left(\frac{y+m}{y-m}\cdot\frac{y-n}{y+n}\right)^2 dy = -\frac{2\pi^2}{m-n},\ 0,\ \frac{2\pi^2}{m-n},$$

according as (*a*) $m > 0 > n$, (*b*) m and n have the same sign, or (*c*) $m < 0 < n$. These results agree with Theorem A.

If we take $a = 0$, $A = 1$, $b = -1$, $B = 1$, we find

$$\int_{0}^{1} dx\, P\int_{-1}^{1} f\,dy = \frac{1}{2(m-n)}\int_{0}^{1}\log\left(\frac{1-mx}{1+mx}\cdot\frac{1+nx}{1-nx}\right)^2\frac{dx}{x},$$

$$P\int_{-1}^{1} dy\, P\int_{0}^{1} f\,dx = \frac{1}{2(m-n)}\,P\int_{-1}^{1}\log\left(\frac{y-n}{y-m}\right)^2\frac{dy}{y}.$$

The last integral is not convergent if the sign of the principal value is removed. It may, however, be transformed into

$$\frac{1}{2(m-n)}\int_{0}^{1}\log\left(\frac{y+m}{y-m}\cdot\frac{y-n}{y+n}\right)^2\frac{dy}{y},$$

and we find, as before, that the difference of the repeated integrals is $-\pi^2/(m-n)$, 0, or $\pi^2/(m-n)$. This agrees with Theorem A*a*.

If we take $a = b = 0$, $A = B = 1$, the repeated integrals

$$\int_{0}^{1} dx\, P\int_{0}^{1} f\,dy = \frac{1}{2(m-n)}\int_{0}^{1}\log\left(\frac{1-mx}{1-nx}\right)^2\frac{dx}{x}, \qquad \int_{0}^{1} dy\, P\int_{0}^{1} f\,dx = \frac{1}{2(m-n)}\int_{0}^{1}\log\left(\frac{y-n}{y-m}\right)^2\frac{dy}{y}$$

are not convergent unless $m+n = 0$. If this condition is satisfied their difference is easily found to be $-\pi^2/4m$ or $\pi^2/4m$, according as m is positive or negative. This agrees with Theorem A*b*.

If we take $a < 0 < A$, $b = -1$, $B = 1$, and $n = 0$, so that

$$f(x, y) = 1/\{y(y-mx)\},$$

---

* In this case, all of one singular curve, except its point of intersection with the other, lies outside the rectangle.

we obtain an illustration of Theorem B. Then

$$\int_a^A dx\, P\int_{-1}^{1} f\,dy = \frac{1}{2m}\int_a^A \log\left(\frac{1-mx}{1+mx}\right)^2 \frac{dx}{x}, \qquad P\int_{-1}^{1} dy\, P\int_a^A f\,dx = \frac{1}{2m}\, P\int_{-1}^{1} \log\left(\frac{y-ma}{y-mA}\right)^2 \frac{dy}{y}.$$

The last integral, which is no longer convergent if the sign of the principal value is removed, is equal to

$$\frac{1}{2m}\int_0^1 \log\left(\frac{y-ma}{y+ma}\right)^2 \frac{dy}{y} - \frac{1}{2m}\int_0^1 \log\left(\frac{y-mA}{y+mA}\right)^2 \frac{dy}{y}$$

$$= -\frac{1}{2m}\int_{-\infty}^{a} \log\left(\frac{1-mx}{1+mx}\right)^2 \frac{dx}{x} - \frac{1}{2m}\int_A^{\infty} \log\left(\frac{1-mx}{1+mx}\right)^2 \frac{dx}{x};$$

and so the difference between the repeated integrals is

$$\frac{1}{2m}\int_{-\infty}^{\infty} \log\left(\frac{1-mx}{1+mx}\right)^2 \frac{dx}{x} = -\frac{\pi^2}{|m|};$$

a result which agrees with Theorem B.

III.

Applications to the Inversion of Definite Integrals.

19. The preceding results have many interesting applications to the problem of the "inversion of a definite integral," which forms the starting point for the modern theory of "integral equations."

(i.) It is easy to see that

$$P\int_0^1 \cot\pi(y-\beta)\,dy = \tfrac{1}{2}\left[\log\sin^2\pi(y-\beta)\right]_0^1 = 0 \quad (0<\beta<1).$$

Hence, if $0<x<1$, $0<\beta<1$, we have

$$P\int_0^1 \operatorname{cosec}\pi(x-y)\operatorname{cosec}\pi(y-\beta)\,dy$$

$$= \operatorname{cosec}\pi(x-\beta)\, P\int_0^1 \left\{\cot\pi(x-y)+\cot\pi(y-\beta)\right\} dy = 0.$$

Now, take $a=b=0$, $A=B=1$, and

$$f(x,y) = \operatorname{cosec}\pi(x-y)\operatorname{cosec}\pi(y-\beta)\,\phi(x).$$

The singular curves are $x-y=0$ and $y-\beta=0$, which intersect in the one point (β,β). Also $\lambda = \sin\pi(x-y)$, $(\partial\lambda/\partial x)_{\beta,\beta} = \pi$, and

$$\psi(\beta,\beta) = \lim_{x\to\beta,\ y\to\beta}\left\{\frac{y-\beta}{\sin\pi(y-\beta)}\,\phi(x)\right\} = \phi(\beta)/\pi.$$

Hence, by Theorem B, we obtain $\Delta = \phi(\beta)$. Thus

$$(1) \qquad P\int_0^1 \operatorname{cosec}\pi(y-\beta)\,dy\, P\int_0^1 \operatorname{cosec}\pi(x-y)\,\phi(x)\,dx = -\phi(\beta).$$

This result may be stated by means of the two formulæ

$$(2)\quad P\int_0^1 \operatorname{cosec}\pi(x-y)\,\phi(x)\,dx = \chi(y), \quad P\int_0^1 \operatorname{cosec}\pi(x-y)\,\chi(x)\,dx = -\phi(y),$$

which is a typical "inversion formula." An example is given by the equations

$$P\int_0^1 \frac{\cos\pi(1-\lambda)\,x}{(\sin\pi x)^\lambda}\,\frac{dx}{\sin\pi(x-y)} = -\frac{\sin\pi(1-\lambda)y}{(\sin\pi y)^\lambda},$$

$$P\int_0^1 \frac{\sin\pi(1-\lambda)\,x}{(\sin\pi x)^\lambda}\,\frac{dx}{\sin\pi(x-y)} = \frac{\cos\pi(1-\lambda)\,y}{(\sin\pi y)^\lambda},$$

which I proved in a paper in the *Quarterly Journal* for 1901.* Here $\lambda < 1$. It will be observed that, if $\lambda > 0$, the subject of integration has further infinities along the lines $x = 0$, 1, such that its integral up to $x = 0$ or $x = 1$ is absolutely convergent. It is easy, and in no way relevant to our present purpose, to prove that our conclusions are not affected by this circumstance.

It is clear that the value of

$$P\int_0^1 \frac{dy}{\sin\pi(y-\beta)}\int_a^A \frac{\phi(x)}{\sin\pi(x-y)}\,dx$$

is $-\phi(\beta)$, provided only $a < \beta < A$. If $a < A < \beta$ or $\beta < a < A$, it is zero; if a or A is equal to β it is $-\frac{1}{2}\phi(\beta)$. But to take $a = 0$, $A = 1$ clearly leads to the most elegant result.

If $\phi(x) = 1$, we find that

$$\chi(y) = P\int_0^1 \operatorname{cosec}\pi(x-y)\,dx = \left[\frac{1}{2\pi}\log\tan^2\tfrac{1}{2}\pi(x-y)\right]_0^1 = \frac{1}{\pi}\log\cot^2\tfrac{1}{2}\pi y.$$

Thus, if $0 < y < 1$, we have

$$P\int_0^1 \frac{\log\cot^2\frac{1}{2}\pi x}{\sin\pi(x-y)}\,dx = -\pi.$$

We can, of course, obtain the values of any number of special integrals in this manner.

(ii.) Since

$$\cot\pi(x-y)\cot\pi(y-\beta) = \cot\pi(x-\beta)\{\cot\pi(x-y)+\cot\pi(y-\beta)\}+1,$$

we have $$P\int_0^1 \cot\pi(x-y)\cot\pi(y-\beta)\,dy = 1 \quad (0<x<1,\ 0<\beta<1).$$

Hence we obtain the formula

$$(3)\quad P\int_0^1 \cot\pi(y-\beta)\,dy\,P\int_0^1 \cot\pi(x-y)\,\phi(x)\,dx = \int_0^1 \phi(x)\,dx - \phi(\beta),$$

---

* *Quart. Jour. of Math.*, Vol. XXXII., p. 383.

$\phi(x)$ being any function with continuous first and second differential coefficients.

In this case again we may replace the limits of integration with respect to x by any numbers a and A, such that $a < \beta < A$.

An equivalent manner of stating this result is by means of the pair of formulæ

$$(4) \qquad \begin{cases} P\int_0^1 \cot\pi(x-y)\,\phi(x)\,dx = \quad \chi(y) - \int_0^1 \chi(x)\,dx, \\ P\int_0^1 \cot\pi(x-y)\,\chi(x)\,dx = -\phi(y) + \int_0^1 \phi(x)\,dx. \end{cases}$$

These formulæ appear to have been given by Hilbert in his lectures: a proof, based on quite different ideas, has been given by Kellogg.*

(iii.) A third example is obtained by taking

$$f(x, y) = \frac{\phi(x)}{(\cos\pi x - \cos\pi y)(\cos\pi y - \cos\pi\beta)}.$$

In this case there are *three* corrections to be applied, viz., for the points (β, β), (0, 0), and (1, 1); and Theorems B and A*b* have both to be used. Using the equation

$$P\int_0^1 \frac{dy}{\cos\pi y - \cos\pi\beta} = 0 \quad (0 < \beta < 1),$$

we easily obtain

$$(5) \quad P\int_0^1 \frac{dy}{\cos\pi y - \cos\pi\beta}\, P\int_0^1 \frac{\phi(x)\,dx}{\cos\pi x - \cos\pi y} = \frac{1}{\sin^2\pi\beta}\left\{\cos^2\tfrac{1}{2}\pi\beta\,\phi(0) + \sin^2\tfrac{1}{2}\pi\beta\,\phi(1) - \phi(\beta)\right\}.$$

This formula may be expressed in a particularly elegant form if $\phi(x) = \sin\pi x\,\psi(x)$, so that $\phi(0) = 0$, $\phi(1) = 1$. We then obtain the formulæ

$$(6) \qquad P\int_0^1 \frac{\sin\pi x\,\psi(x)\,dx}{\cos\pi x - \cos\pi y} = \chi(y), \qquad P\int_0^1 \frac{\sin\pi y\,\chi(x)\,dx}{\cos\pi x - \cos\pi y} = -\psi(y).$$

---

* *Math. Annalen*, Bd. LVIII., p. 442. It is to be observed that the term

$$\int_0^1 \chi(x)\,dx$$

in the first line of (4) is inserted merely for the sake of formal parallelism with the second line; it may be removed, or any other constant substituted, without affecting the result.

For example, if $\phi(x) = \cos n\pi x$, and if we notice that

$$P\int_0^1 \frac{\cos n\pi x}{\cos \pi x - \cos \pi y}\,dx = \frac{\sin n\pi y}{\sin \pi y},$$

we obtain the formula

$$P\int_0^1 \frac{\sin n\pi y}{\sin \pi y}\,\frac{dy}{\cos \pi y - \cos \pi\beta} = \frac{1}{\sin^2 \pi\beta}\left\{\cos^2 \tfrac{1}{2}\pi\beta + (-1)^n \sin^2 \tfrac{1}{2}\pi\beta - \cos n\pi\beta\right\}.$$

With this formula may be associated

$$\int_0^1 \frac{\sin n\pi y}{\sin \pi y}\,\frac{dy}{\cosh \pi\beta - \cos \pi y} = \frac{1}{\sinh^2 \pi\beta}\left\{\cosh^2 \tfrac{1}{2}\pi\beta - (-1)^n \sinh^2 \tfrac{1}{2}\pi\beta - e^{-n\pi\beta}\right\},$$

which may be obtained by applying Theorem A*b* to the function

$$f(x, y) = \frac{\cos n\pi x}{(\cos \pi x - \cos \pi y)(\cosh \pi\beta - \cos \pi y)};$$

or otherwise deduced from well known results.

20. (iv.) The formulæ (1)–(6) are capable of various interesting transformations. Thus, if in (2), we write

$$\tan \pi x = t, \quad \tan \pi y = \tau, \quad \frac{\phi(\arctan t/\pi)}{\sqrt{(1+t^2)}} = \lambda(t), \quad \frac{\chi(\arctan \tau/\pi)}{\sqrt{(1+\tau^2)}} = \mu(\tau),$$

we are led to the formulæ

$$(7) \qquad P\int_{-\infty}^{\infty} \frac{\lambda(t)}{t-\tau}\,dt = \pi\mu(\tau), \qquad P\int_{-\infty}^{\infty} \frac{\mu(t)}{t-\tau}\,dt = -\pi\lambda(\tau).$$

This is a most interesting pair of formulæ, and it is worth while to attempt to determine as precisely as possible sufficient conditions to be satisfied by $\lambda(t)$ in order that the formulæ shall certainly be valid. But we shall defer this for a moment, until we arrive at the formulæ more directly (see §§ 22–24).

Similarly, the transformation $\tan \frac{1}{2}\pi x = t$, $\tan \frac{1}{2}\pi y = \tau$ leads us to the equations

$$(8) \qquad P\int_0^{\infty} \frac{1+\tau^2}{(t-\tau)(1+t\tau)}\,\lambda(t)\,dt = \pi\mu(\tau), \qquad P\int_0^{\infty} \frac{1+\tau^2}{(t-\tau)(1+t\tau)}\,\mu(t)\,dt = -\pi\lambda(\tau).$$

Similarly, too, we obtain from (4) the formulæ

$$P\int_{-\infty}^{\infty} \frac{1+t\tau}{t-\tau}\,\frac{\lambda(t)\,dt}{1+t^2} = \pi\mu(\tau) - \int_{-\infty}^{\infty} \frac{\mu(\tau)\,d\tau}{1+\tau^2},$$

$$P\int_{-\infty}^{\infty} \frac{1+t\tau}{t-\tau}\,\frac{\mu(t)\,dt}{1+t^2} = -\pi\lambda(\tau) + \int_{-\infty}^{\infty} \frac{\lambda(\tau)\,d\tau}{1+\tau^2},$$

also given by Kellogg.*

Finally, from (6), we obtain

$$(9) \qquad P\int_0^{\infty} \frac{t}{t^2-\tau^2}\,\frac{\lambda(t)}{1+t^2}\,dt = -\tfrac{1}{2}\pi\,\frac{\mu(\tau)}{1+\tau^2}, \qquad P\int_0^{\infty} \frac{\tau}{t^2-\tau^2}\,\mu(t)\,dt = \tfrac{1}{2}\pi\lambda(\tau).$$

21. (v.) If we take $a = b = -1$, $A = B = 1$,

$$f(x, y) = \frac{xy\,\phi(x)}{(x-y)(1-xy)(y-\beta)(1-\beta y)}, \quad \frac{(1+x^2)(1+y^2)\,\phi(x)}{(x-y)(1-xy)(y-\beta)(1-\beta y)},$$

* *L.c.*, p. 451.

and observe that

$$P\int_{-1}^{1}\frac{y\,dy}{(x-y)(1-xy)(y-\beta)(1-\beta y)}=P\int_{-1}^{1}\frac{(1+y^2)\,dy}{(x-y)(1-xy)(y-\beta)(1-\beta y)}=0,$$

if $-1<x<1$, $-1<\beta<1$, we are led to the equations

$$(10)\quad \int_{-1}^{1}\frac{y\,dy}{(y-\beta)(1-\beta y)}P\int_{-1}^{1}\frac{x\phi(x)\,dx}{(x-y)(1-xy)}$$
$$=\left\{\frac{\pi}{2(1-\beta^2)}\right\}^2\left\{-4\beta^2\phi(\beta)+(1+\beta)^2\phi(1)+(1-\beta)^2\phi(-1)\right\},$$

$$(11)\quad P\int_{-1}^{1}\frac{(1+y^2)\,dy}{(y-\beta)(1-\beta y)}P\int_{-1}^{1}\frac{(1+x^2)\,\phi(x)\,dx}{(x-y)(1-xy)}$$
$$=\left(\frac{\pi}{1-\beta^2}\right)^2\left\{-(1+\beta^2)^2\phi(\beta)+(1+\beta)^2\phi(1)+(1-\beta)^2\phi(-1)\right\}.$$

Each of these results may evidently be stated as an inversion formula; and either of them, or any of the preceding formulæ, may be applied to give the values of any number of particular integrals. Thus, to put $\phi(x)=1$ in (10) leads to the formula

$$P\int_{-1}^{1}\log\left(\frac{1+y}{1-y}\right)\frac{dy}{(y-\beta)(1-\beta y)}=\frac{\pi^2}{2(1-\beta^2)}\quad(0<\beta<1).$$

22. *Examples with Infinite Limits.*—I shall not attempt to formulate any general theorems as extensions of Theorems A, &c., to the cases in which some or all of the limits are infinite. Such cases are better considered individually; and I shall consider one case, perhaps the most interesting of all, in detail.

(vi.) Let us suppose first that $b=-\infty$, $B=\infty$, and

$$f(x,y)=\frac{\phi(x)}{(x-y)(y-\beta)}.$$

Since
$$P\int_{-\infty}^{\infty}\frac{dy}{(x-y)(y-\beta)}=0,$$

the result to which we are led is

$$(12)\qquad P\int_{-\infty}^{\infty}\frac{dy}{y-\beta}P\int_{a}^{A}\frac{\phi(x)\,dx}{x-y}=-\Delta,$$

where $\Delta=0$, if β falls outside the interval (a, A), $\Delta=\pi^2\phi(\beta)$, if $a<\beta<A$, and $\Delta=\frac{1}{2}\pi^2\phi(\beta)$, if $\beta=a$ or A. Let us suppose $a<\beta<A$.

Theorem B assures us of the truth of the equation

$$(13)\qquad P\int_{b}^{B}dy\,P\int_{a}^{A}\frac{\phi(x)\,dx}{x-y}=\int_{a}^{A}\phi(x)\,dx\,P\int_{b}^{B}\frac{dy}{(x-y)(y-\beta)}-\pi^2\phi(\beta),$$

if $b<\beta<B$. It is clear that the conditions that we may replace b and

B by $-\infty$ and ∞ in this equation are that

$$\int_a^A \phi(x)dx \int_B^\infty \frac{dy}{(x-y)(y-\beta)} \to 0, \quad \int_a^A \phi(x)\,dx \int_{-\infty}^b \frac{dy}{(x-y)(y-\beta)} \to 0,$$

as $B \to \infty$ and $b \to -\infty$. But these conditions are certainly satisfied. For the first equation is

$$\lim_{B\to\infty} \int_a^A \phi(x) \log\left(\frac{B-x}{B-\beta}\right) \frac{dx}{x-\beta} = 0.$$

Now $$\log\left(\frac{B-x}{B-\beta}\right) = \log\left(1-\frac{x-\beta}{B-\beta}\right) = -\left(\frac{x-\beta}{B-\beta}\right)\Big/\left(1-\theta\frac{x-\beta}{B-\beta}\right),$$

where $0<\theta<1$: thus, for large values of B, we have

$$\left|\log\left(\frac{B-x}{B-\beta}\right)\right| < \frac{K}{B}|x-\beta|;$$

and from this the result follows at once. Hence

$$P\int_{-\infty}^{\infty} \frac{dy}{y-\beta} P\int_a^A \frac{\phi(x)\,dx}{x-y} = -\Delta. \tag{14}$$

23. The question as to whether we can replace a and A by $-\infty$ and ∞ in this equation is decidedly more difficult. It is most convenient to begin by first establishing the equation

$$P\int_b^B \frac{dy}{y-\beta} P\int_{-\infty}^{\infty} \frac{\phi(x)\,dx}{x-y} = \int_{-\infty}^{\infty} \phi(x)\,dx\, P\int_b^B \frac{dy}{(x-y)(y-\beta)} - \pi^2\phi(\beta) \tag{15}$$

$$(b<\beta<B).$$

I shall prove that this equation holds if only

$$\int^{\infty} \frac{\phi(x)}{x}dx, \qquad \int_{-\infty} \frac{\phi(x)}{x}dx$$

are convergent.

It is clear that (13) will pass over into (15) as $a \to -\infty$ and $A \to \infty$, if only

$$\lim_{A\to\infty} P\int_b^B \frac{dy}{y-\beta}\int_A^{\infty} \frac{\phi(x)}{x-y}dx = 0, \tag{16}$$

with a similar equation involving a. Now the integral

$$\chi(A, y) = \int_A^{\infty} \frac{\phi(x)}{x-y}dx$$

is convergent, since $x/(x-y)$ is monotonic, and uniformly convergent* for

* See Bromwich, *Infinite Series*, pp. 433 *et seq.*

$b \leqslant y \leqslant B$, or, indeed, throughout any finite interval of values of y. For a similar reason, we have

$$\frac{\partial \chi(A, y)}{\partial y} = \int_A^\infty \frac{\phi(x)}{(x-y)^2}\, dx.$$

Also $\chi(A, y) = \dfrac{A}{A-y}\displaystyle\int_A^{A'} \frac{\phi(x)}{x}\, dx, \quad \frac{\partial \chi(A, y)}{\partial y} = \frac{A}{(A-y)^2}\int_A^{A''} \frac{\phi(x)}{x}\, dx,$

where $A' > A$, $A'' > A$. Hence, given ϵ, we can so choose A_0 that

$$|\chi| < \epsilon, \qquad \left|\frac{\partial \chi}{\partial y}\right| < \epsilon/A,$$

for $A \geqslant A_0$ and throughout any finite interval of values of y. Now

$$P\int_b^B \chi(A, y)\frac{dy}{y-\beta} = \left(P\int_b^{2\beta-b} + \int_{2\beta-b}^B\right)\chi(A, y)\frac{dy}{y-\beta} = J_1 + J_2,$$

where

$$J_1 = \int_0^{\beta-b} \{\chi(A, \beta+u) - \chi(A, \beta-u)\}\frac{du}{u}$$

$$= 2\int_0^{\beta-b} \frac{\partial \chi(A, t)}{\partial t}\, du$$

(t being a function of u which certainly lies within the larger of the two intervals $b < t < 2\beta - b$, $b < t < B$); and

$$J_2 = \int_{2\beta-b}^B \chi(A, y)\frac{dy}{y-\beta} = \chi(A, w)\int_{2\beta-b}^B \frac{dy}{y-\beta},$$

w lying between $2\beta - b$ and B. From these equations, and the inequalities for χ and $\partial\chi/\partial y$ proved above, the truth of (16), and therefore of (15), follows immediately.

The question which remains is whether we can replace b and B by $-\infty$ and ∞ in (15). And this will be so if only

$$(17)\quad \int_{-\infty}^{\infty} \phi(x)\, dx\, P\int_B^\infty \frac{dy}{(x-y)(y-\beta)} = \tfrac{1}{2}\int_{-\infty}^{\infty} \phi(x)\log\left(\frac{B-x}{B-\beta}\right)^2 \frac{dx}{x-\beta} \to 0,$$

with a similar condition in b. That this is so when the limits are a and A was proved in § 22; hence it is enough for us to prove that

$$(18)\quad \lim_{B\to\infty} \tfrac{1}{2}\int_A^\infty \phi(x)\log\left(\frac{B-x}{B-\beta}\right)^2 \frac{dx}{x-\beta} = 0 \quad (A > \beta).$$

Moreover we may without real loss of generality take $\beta = 0$, and consider the equation

$$(18')\quad \lim_{B\to\infty} \tfrac{1}{2}\int_A^\infty \phi(x)\log\left(1-\frac{x}{B}\right)^2 \frac{dx}{x} = 0.$$

24. I shall now prove that the conditions (i.) that $|\phi(x)| < K$, and (ii.) that

$$\int^{\infty} \phi(x) \frac{\log x}{x} dx$$

is convergent, are sufficient to ensure the truth of (18′). Since $1/(\log x)$ is monotonic, the second of these ensures that $\int^{\infty} \frac{\phi(x)}{x}$ is convergent, as has already been assumed.

Now, let

$$\int_A^{\infty} = \int_A^{A_1} + \int_{A_1}^{(1-\lambda)B} + \int_{(1-\lambda)B}^{(1+\lambda)B} + \int_{(1+\lambda)B}^{\infty} = J_1 + J_2 + J_3 + J_4,$$

say, where $0 < \lambda < 1$. Choose A_1 so that

$$\left| \int_{A'}^{A''} \frac{\phi(x)}{x} dx \right| < \sigma, \tag{19}$$

for $A'' > A' \geqslant A_1$. When A_1 has been chosen we can choose B_1, so that

$$|J_1| < \sigma \quad (B \geqslant B_1). \tag{20}$$

Also the function $\log(1-x/B)^2$ is negative for $A_1 < x < (1-\lambda)B$, and decreases algebraically as x increases; hence we may apply Bonnet's form of the second mean-value theorem* to the integral J_2, and so obtain

$$J_2 = \log\lambda \int_{\xi}^{(1-\lambda)B} \frac{\phi(x)}{x} dx,$$

where $A_1 < \xi < (1-\lambda)B$; and so we can choose B_2 so that

$$|J_2| < \sigma \log\left(\frac{1}{\lambda}\right) \quad (B \geqslant B_2). \tag{21}$$

Again,
$$J_3 = \tfrac{1}{2} \int_{1-\lambda}^{1+\lambda} \phi(\xi B) \log(1-\xi)^2 \frac{d\xi}{\xi},$$

and so

$$J_3 < K \int_{1-\lambda}^{1+\lambda} \log\left(\frac{1}{1-\xi}\right)^2 \frac{d\xi}{\xi} < \frac{K}{1-\lambda} \int_{1-\lambda}^{1+\lambda} \log\left(\frac{1}{1-\xi}\right)^2 d\xi \tag{22}$$

$$= \frac{2K\lambda}{1-\lambda} \left\{1+\log\left(\frac{1}{\lambda}\right)\right\} < K\lambda \left\{1+\log\left(\frac{1}{\lambda}\right)\right\},$$

provided $1/(1-\lambda) < K$, a condition which will certainly be satisfied.

---

* See, for example, Bromwich's *Infinite Series*, pp. 426 *et seq.*, or my *Course of Pure Mathematics*, p. 286.

Finally, $$J_4 = J_{4,1} + J_{4,2} + J_{4,3},$$

where $$J_{4,1} = \int_{(1+\lambda)B}^{\infty} \frac{\phi(x)\log x}{x}\,dx, \quad J_{4,2} = -\log B \int_{(1+\lambda)B}^{\infty} \frac{\phi(x)}{x}\,dx,$$

$$J_{4,3} = \int_{(1+\lambda)B}^{\infty} \frac{\phi(x)}{x} \log\left(1-\frac{B}{x}\right) dx.$$

We can choose $B_{4,1}$, so that

(23) $$|J_{4,1}| < \sigma \quad (B \geqslant B_{4,1});$$

and, since $$J_{4,2} = -\log B \int_{(1+\lambda)B}^{\infty} \frac{\phi(x)\log x}{x}\,\frac{dx}{\log x}$$

$$= -\frac{\log B}{\log\{(1+\lambda)B\}} \int_{(1+\lambda)B}^{\xi} \frac{\phi(x)\log x}{x}\,dx,$$

where $\xi > (1+\lambda)B$, we can choose $B_{4,2}$, so that

(24) $$|J_{4,2}| < \sigma \quad (B \geqslant B_{4,2}).$$

And $$J_{4,3} = \log\left(\frac{\lambda}{1+\lambda}\right) \int_{(1+\lambda)B}^{\xi} \frac{\phi(x)}{x}\,dx,$$

so that we can choose $B_{4,3}$ so that

(25) $$|J_{4,3}| < \sigma \log(1/\lambda) \quad (B \geqslant B_{4,3}).$$

Let B_0 be the greatest of B_1, B_2, $B_{4,1}$, $B_{4,2}$, $B_{4,3}$. Then

$$\left|\tfrac{1}{2}\int_A^{\infty} \phi(x) \log\left(1-\frac{x}{B}\right)^2 \frac{dx}{x}\right| \leqslant |J_1| + |J_2| + |J_3| + |J_{4,1}| + |J_{4,2}| + |J_{4,3}|$$

$$< \sigma\left\{3+2\log\left(\frac{1}{\lambda}\right)\right\} + K\lambda\left\{1+\log\left(\frac{1}{\lambda}\right)\right\} \quad (B \geqslant B_0).$$

Given δ we can choose λ, so that $K\lambda\left\{1+\log\left(\frac{1}{\lambda}\right)\right\} < \frac{1}{2}\delta$, and then σ, so that $\sigma\{3+2\log(1/\lambda)\} < \frac{1}{2}\delta$. It follows that the integral tends to zero as $B \to \infty$, and we may therefore replace B by ∞ in (15). The result at which we thus arrive seems of sufficient interest to be stated as a theorem.

THEOREM C.—*If* (i.) $\phi(x)$ *and its first two derivatives are continuous,* (ii.) $|\phi(x)| < K$ *for all values of* x, *and* (iii.) *the integrals*

$$\int^{\infty} \frac{\phi(x)\log x}{x}\,dx, \qquad \int_{-\infty} \frac{\phi(x)\log(-x)}{x}\,dx$$

are convergent, then will

$$P\int_{-\infty}^{\infty}\frac{dy}{y-\beta}\,P\int_{-\infty}^{\infty}\frac{\phi(x)\,dx}{x-y}=-\pi^2\phi(\beta);$$

or, in other words, if $$P\int_{-\infty}^{\infty}\frac{\phi(x)\,dx}{x-y}=\pi\chi(y),$$

then will $$P\int_{-\infty}^{\infty}\frac{\chi(x)\,dx}{x-y}=-\pi\phi(y).$$

The form of this result has been already arrived at otherwise (§ 20), but without an accurate investigation of sufficient conditions for its truth. A familiar example is obtained by taking

$$\phi(x)=\cos mx,\qquad \chi(x)=-\sin mx.$$

The inversion formula itself has a familiar look, but I am not aware that I have ever seen it before, much less any accurate discussion of it proceeding by methods in any way resembling those of the preceding sections.

25. (vii.) The following formulæ are of a similar character :—

$$(a)\quad \int_0^\infty \log\left(\frac{x+\eta}{x-\eta}\right)^2\phi(x)\,\frac{dx}{x}=4\int_0^\eta dy\,P\int_0^\infty\frac{\phi(x)\,dx}{x^2-y^2}+\pi^2\phi(0),$$

$$\int_0^\infty dy\,P\int_0^\infty\frac{\phi(x)\,dx}{x^2-y^2}=-\tfrac{1}{4}\pi^2\phi(0);$$

$$(b)\quad P\int_0^\infty\frac{dy}{y^2-\beta^2}\,P\int_0^\infty\frac{\phi(x)\,dx}{x^2-y^2}=\left(\frac{\pi}{2\beta}\right)^2\{\phi(0)-\phi(\beta)\},$$

$$P\int_0^\infty\frac{x\phi(x)}{x^2-y^2}\,dx=\tfrac{1}{2}\pi\chi(y),\qquad P\int_0^\infty\frac{y\chi(x)}{x^2-y^2}\,dx=-\tfrac{1}{2}\pi\phi(y);$$

$$(c)\quad P\int_0^\infty\frac{y^2\,dy}{y^2-\beta^2}\,P\int_0^\infty\frac{\phi(x)\,dx}{x^2-y^2}=-\tfrac{1}{4}\pi^2\phi(\beta).$$

The last of these formulæ, which also leads to the inversion formula written just above it, was given by Schlömilch (*Analytische Studien*, Bd. II., p. 156), but without any accurate definition or discussion. Interesting formulæ may be obtained from any of the above equations by particular choices of $\phi(x)$, *e.g.*, $\dfrac{1}{x^2+a^2}$, $\dfrac{\cos mx}{x^2+a^2}$, ...

26. (viii.) The following example, which is of a somewhat different character, leads to a very interesting generalisation of Theorem C.

Take $a=b=-\infty$, $A=B=\infty$, and

$$f(x,y)=\frac{\phi(x)}{(y-\beta)\{x-R(y)\}},$$

where $R(y)$ is a rational function of y whose numerator is of higher degree than its denominator, and which is such that the equation $R(y) = x$ has, for all values of x, *real* roots only. Then

$$P\int_{-\infty}^{\infty} \frac{dy}{(y-\beta)\{x-R(y)\}} = 0;$$

and so we are led to the formulæ

$$P\int_{-\infty}^{\infty} \frac{dy}{y-\beta} P\int_{-\infty}^{\infty} \frac{\phi(x)\,dx}{x-R(y)} = \mp\pi^2\phi\{R(\beta)\}, \tag{26}$$

$$\begin{cases} P\int_{-\infty}^{\infty} \dfrac{\phi(x)\,dx}{x-y} = \pi\chi(y), \\ P\int_{-\infty}^{\infty} \dfrac{\chi\{R(x)\}\,dx}{x-y} = \mp\pi\phi\{R(y)\}, \end{cases} \tag{27}$$

where the upper or lower sign is to be chosen according as $R'(\beta) \gtrless 0$. The last formulæ embody a generalisation of Theorem C. In particular we may take

$$R(y) = ay - \frac{b}{y-B} - \frac{c}{y-C} - \ldots - \frac{k}{y-K} \quad (a, b, c, \ldots, k > 0).$$

Suppose, for example, that

$$R(y) = ay - \frac{b}{y} \quad (a, b > 0), \qquad \phi(x) = e^{ix}, \qquad \chi(x) = ie^{ix}.$$

We obtain* $$P\int_{-\infty}^{\infty} e^{i(ax-b/x)} \frac{dx}{x-y} = \pi i e^{i(ay-b/y)},$$

$$P\int_0^{\infty} \cos\left(ax-\frac{b}{x}\right)\frac{dx}{x^2-y^2} = -\tfrac{1}{2}\pi\sin\left(ay-\frac{b}{y}\right), \quad P\int_0^{\infty} \sin\left(ax-\frac{b}{x}\right)\frac{x\,dx}{x^2-y^2} = \tfrac{1}{2}\pi\cos\left(ay-\frac{b}{y}\right).$$

With these formulæ may be associated those obtained from the formula

$$\int_{-\infty}^{\infty} \frac{dy}{y^2+\beta^2} P\int_{-\infty}^{\infty} \frac{\phi(x)}{x-R(y)}\,dx = \int_{-\infty}^{\infty} \phi(x)\,dx\, P\int_{-\infty}^{\infty} \frac{dy}{(y^2+\beta^2)\{x-R(y)\}} = \frac{\pi}{\beta}\mathbf{R}\left[\int_{-\infty}^{\infty} \frac{\phi(x)\,dx}{x-R(\beta i)}\right]$$

[where $\phi(x)$ is real]. For example, taking $\phi(x) = \sin x$, $R(y) = ay - b/y$, we obtain

$$\int_0^{\infty} \cos\left(ay-\frac{b}{y}\right)\frac{dy}{y^2+\beta^2} = \frac{1}{\beta}\int_0^{\infty} \frac{x\sin x\,dx}{x^2+\left(a\beta+\frac{b}{\beta}\right)^2} = \frac{\pi}{2\beta}e^{-a\beta-b/\beta}.$$

27. It is instructive to consider also the case in which the roots of $x = R(y)$ are not always real. Suppose, *e.g.*,

$$R(y) = ay + \frac{b}{y} \quad (a, b > 0).$$

The roots are real only if $x^2 \geqslant 4ab$, and

$$P\int_{-\infty}^{\infty} \frac{dy}{(y-\beta)\left(x-ay-\frac{b}{y}\right)} = -\frac{x-(2b/\beta)}{x-a\beta-(a/\beta)} \frac{\pi}{\sqrt{(4ab-x^2)}}, \; 0,$$

---

* See *Quarterly Journal*, Vol. XXXII., p. 374; Bromwich, *Infinite Series*, p. 496.

according as $x^2 < 4ab$ or $x^2 > 4ab$. Let us, for simplicity, take $\beta = 1$. Then we obtain

$$-\pi \int_{-2\sqrt{(ab)}}^{2\sqrt{(ab)}} \frac{x-2b}{x-a-b} \frac{\phi(x)\,dx}{\sqrt{(4ab-x^2)}} = P\int_{-\infty}^{\infty} \frac{dy}{y-1} P\int_{-\infty}^{\infty} \frac{\phi(x)\,dx}{x-ay-(b/y)} + \pi^2\phi(a+b)\operatorname{sgn}(a-b).$$

Suppose $b < a$, and let $\tau = \sqrt{(b/a)}$, $m = 2\sqrt{(ab)}$. Then, making the substitution $x = mt$, we obtain, after a little reduction, the formulæ

$$P\int_{-\infty}^{\infty} \frac{\phi(x)\,dx}{x-y} = \pi\chi(y),$$

$$P\int_{-\infty}^{\infty} \frac{\chi\left(ay+\frac{b}{y}\right)}{y-1}\,dy = -\pi\phi(a+b) + 2\tau\int_0^{\pi} \frac{\cos\theta-\tau}{1-2\tau\cos\theta+\tau^2}\phi(m\cos\theta)\,d\theta.$$

In particular, the assumption $\phi(x) = e^{ix}$ leads to the formulæ

$$P\int_0^{\infty} \cos\left(ax+\frac{b}{x}\right)\frac{dx}{1-x^2} = \tfrac{1}{2}\pi\sin(a+b) - \tfrac{1}{2}\int_0^{\pi} \frac{1-\tau^2}{1-2\tau\cos\theta+\tau^2}\sin(m\cos\theta)\,d\theta$$

$$= \tfrac{1}{2}\pi\sin(a+b) - \pi(\tau J_1 - \tau^3 J_3 + \tau^5 J_5 - \ldots),$$

$$P\int_0^{\infty} \sin\left(ax+\frac{b}{x}\right)\frac{dx}{1-x^2} = -\tfrac{1}{2}\pi\cos(a+b) + \tfrac{1}{2}\int_0^{\pi} \frac{1-\tau^2}{1-2\tau\cos\theta+\tau^2}\cos(m\cos\theta)\,d\theta$$

$$= -\tfrac{1}{2}\pi\cos(a+b) - \pi(\tau^2 J_2 - \tau^4 J_4 + \tau^6 J_6 - \ldots),$$

where $0 < b < a$, $\tau = \sqrt{(b/a)}$, $m = 2\sqrt{(ab)}$, and the J's denote Bessel's functions with argument m. With these should be associated the further formulæ*

$$\int_0^{\infty} \cos\left(ax+\frac{b}{x}\right)\frac{dx}{1+x^2} = \tfrac{1}{2}\pi e^{-(a-b)} - \pi(\tau J_1 + \tau^3 J_3 + \tau^5 J_5 + \ldots),$$

$$\int_0^{\infty} \sin\left(ax+\frac{b}{x}\right)\frac{dx}{1+x^2} = \tfrac{1}{2}\pi e^{-(a-b)} - \pi(\tau^2 J_2 + \tau^4 J_4 + \tau^6 J_6 + \ldots).$$

28. It is unnecessary to multiply examples of the very large number of classes of formulæ that can be obtained in this kind of way. There is, however, one kind of case that we have not yet considered. In all the cases that have been considered so far, the number of intersections of the singular curves has been finite. I shall conclude by considering one example in which this is not the case. It is, of course, possible to construct any number of such examples, and the justification of any result thus obtained involves theoretical difficulties additional to those which have been dealt with already. With these, however, I do not propose to deal; for the applications of such results as I have obtained do not seem to be of great interest. I shall, therefore, merely give a single example of the kind of formulæ that can be obtained.

It is easy to see that, if x, β, and b are real and no two of them differ by an integer, then

$$P\int_{-\infty}^{\infty} \frac{1}{\sin\pi(x-y)\sin\pi(y-\beta)}\frac{dy}{y-b} = 0.$$

* *Messenger of Mathematics*, Vol. XXXVIII., p. 129.

The result follows, in fact, at once, when Cauchy's theorem is applied to the integral

$$\int \frac{1}{\sin \pi(x-y) \sin \pi(y-\beta)} \frac{dy}{y-b},$$

the contour of integration being the ordinary "infinite semicircle" described on and above the real axis, and the poles of the subject of integration, which are all real, being avoided by small semicircles in the usual manner.

Suppose, then, that

$$f(x, y) = \frac{\phi(x)}{(x-a)(y-b) \sin \pi(x-y) \sin \pi(y-\beta)}.$$

We obtain

$$0 = P\int_{-\infty}^{\infty} \frac{dy}{(y-b) \sin \pi(y-\beta)} P\int_{-\infty}^{\infty} \frac{\phi(x)\,dx}{(x-a) \sin \pi(x-y)} + \Sigma\Delta,$$

where the sign of summation applies to all points of intersection of singular curves.

These points are (i.) $x = a$, $y = b$; (ii.) $x = a$, $y = a+n$; (iii.) $x = b+m$, $y = b$; (iv.) $x = a$, $y = \beta+n$; (v.) $x = \beta+m+n$, $y = \beta+n$; where m and n have any integral values, positive or negative. In order to ensure that *three* curves shall in no case intersect in one point it is necessary to suppose that no two of a, b, β differ by an integer.

We easily find

$$\Delta_{a,\,b} = 0,$$

$$\Delta_{a,\,a+n} = \frac{\pi\phi(a)}{\sin \pi(a-\beta)} \frac{1}{a-b+n},$$

$$\Delta_{b+m,\,b} = \frac{\pi}{\sin \pi(b-\beta)} \frac{(-1)^m \phi(b+m)}{b-a+m},$$

$$\Delta_{a,\,\beta+n} = 0,$$

$$\Delta_{\beta+m+n,\,\beta+n} = \frac{(-1)^{m+n} \phi(\beta+m+n)}{(\beta+m+n-a)(\beta+n-b)};$$

and, after a little reduction, arrive at the formulæ

$$P\int_{-\infty}^{\infty} \frac{\phi(x)\,dx}{(x-a) \sin \pi(x-y)} = \pi\chi(y),$$

$$P\int_{-\infty}^{\infty} \frac{\chi(x)\,dx}{(x-b)\sin\pi(x-y)}$$

$$= -\pi\phi(a)\cot\pi(b-a)\operatorname{cosec}\pi(y-a) - \cot\pi(y-b)\sum_{-\infty}^{\infty}\frac{(-1)^m\phi(y+m)}{y-a+m}$$

$$+\operatorname{cosec}\pi(y-b)\sum_{-\infty}^{\infty}\frac{(-1)^m\phi(b+m)}{b-a+m}.$$

For instance, if $\phi \equiv 1$, then $\chi \equiv 0$. Hence we should have

$$0 = -\pi\cot\pi(b-a)\operatorname{cosec}\pi(y-a)$$

$$-\cot\pi(y-b)\sum_{-\infty}^{\infty}\frac{(-1)^m}{y-a+m} + \operatorname{cosec}\pi(y-b)\sum_{-\infty}^{\infty}\frac{(-1)^m}{b-a+m},$$

an equation the truth of which may easily be verified.

ON THE DIRICHLET SERIES AND ASYMPTOTIC EXPANSIONS OF INTEGRAL FUNCTIONS OF ZERO ORDER

By J. E. LITTLEWOOD.

[Received June 29th, 1908.—Read November 12th, 1908.—Revised Jan.–Feb., 1909.]

Introduction.

IF an integral function $F(z)$, of finite or zero order, has $-a_1, -a_2, \ldots$ for its sequence of zeros, the Dirichlet series $\sum_{n=1}^{\infty} a_n^{-s}$ converges when the real part of s is greater than some finite number k, not less than zero, and, for this range of values of s, defines an analytic function of s. If the sequence $a_1, a_2, \ldots$ is perfectly general, the line $\Re s = k$ is a barrier of essential singularities of the function. If, however, a_n is an analytic function of n, it will usually happen that the function defined by the Dirichlet series can be continued across the line $\Re s = k$, and that it gives rise to an analytic function $S(s)$, whose finite singularities are isolated points. M. Mellin has shown that when this is the case there is an intimate relation between the function $S(s)$ and the asymptotic expansion of the function $\log F(z)$.*

The typical function of finite non-zero order has $-n^\rho$ for its n-th zero. The Dirichlet series $\Sigma n^{-\rho s}$ then leads to Riemann's function $\zeta(\rho s)$, and the properties of this function and its generalisations play an important part in the theory of Dirichlet series and asymptotic expansions of functions of finite order.†

In the integral functions of zero order, we have, for all values of ρ, $|a_n| > n^\rho$ when n is sufficiently great. There is no single functional form for a_n that is typical in the sense in which n^ρ is typical in the case of finite non-zero order, but an unlimited number of such forms. Thus, starting from e^n, we have among possible forms of a_n,

$$e^{n^k}, \quad \exp(e^{n^\rho}), \quad \exp\exp(e^{n^\rho}), \quad \ldots, \quad (k > 1,\ \rho > 0),$$

* *Acta Soc. Sci. Fenn.*, T. XXIX., No. 4 (1900). "Ein Formel für den Logarithmus transcendenter Funktionen von endlichem Geschlecht" [Reprinted *Acta Math.*, T. XXVIII. (1904)].

† E. W. Barnes, *Proc. London Math. Soc.*, Ser. 2, Vol. 3, p. 273.

in ascending order in n, and

$$e^{n^k}, \quad \exp[(\log n)^{1+\rho}], \quad \exp[\log n (\log\log n)^{\rho}], \quad \exp[\log n (\log_3 n)^{\rho}], \quad \ldots,$$

$$(k < 1, \ \rho > 0),$$

in descending order.

The first of these two classes may be disposed of very briefly. M. Fabry* has shown that, if $\Sigma b_n z^c$ be a power series of unit radius of convergence, and if $(c_{n+1} - c_n) \to \infty$, the unit circle is a barrier of essential singularities of the function. It follows, on taking $z = e^{-s}$, that the function $\Sigma b_n e^{-sc_n}$ has the line $\Re s = 0$ for a barrier. Now, although M. Fabry's result assumes the c's to be integers, we must expect that in *all* cases when $(c_{n+1} - c_n) \to \infty$, $\Sigma b_n e^{-sc_n}$, and in particular Σe^{-sc_n}, has $\Re s = 0$ for a barrier, for, as we have said above, the *general* Dirichlet series has $\Re s = k$ for a barrier.

It will follow that, if a_n be any function of n which increases more rapidly than $e^{\rho n}$ for all values of ρ, we must expect the Dirichlet series Σa_n^{-s} to have $\Re s = 0$ for a barrier, and the function $S(s)$ to exist only where the Dirichlet series converges. The problem of finding the analytic continuation of the series then does not exist.

In this case, M. Mellin's method for determining an asymptotic expansion for $\log \Pi (1 + z/a_n)$ cannot be applied, for it involves the integral $\int S(s) \frac{z^s \, ds}{s \sin \pi s}$, taken along the line $\Re s = -l$, and in the present case this integral does not exist.

It is interesting to notice that the functions of this same class exhibit a certain peculiarity, viz., their asymptotic approximation cannot be effected in terms of the ordinary analytic functions of analysis. I have shown in a former paper† that we can find, from arithmetical considerations, closely approximate asymptotic expressions for the functions in question, and that these expressions involve other than elementary analytic functions.

It is clear, then, that for this class of functions there can be no theory analogous to that developed by M. Mellin and Dr. Barnes for the functions of finite order.

It is otherwise with the functions for which a_n is of our second class,

---

* *Annales de l'Ecole Normale*, Oct., 1896.

† *Proc. London Math. Soc.*, Ser. 2, Vol. 5, p. 361, "On the Asymptotic Approximation to Integral Functions of Zero Order."

i.e., for which a_n is of *less* order than e^n, and the present paper is occupied with the problem of determining the functions $S(s)$ which are the continuations of the Dirichlet series with certain forms of a_n of this class, and with the problem of applying, on the lines of M. Mellin's method, the knowledge of these functions $S(s)$ to the determination of asymptotic expansions for the corresponding integral functions $\Pi(1+z/a_n)$.

It will be observed that we have included the form $a_n = e^n$ in neither of our two classes. This form occupies a limiting position between these classes, and, as might perhaps be expected from this fact, the integral function $\Pi(1+z/e^n)$ exhibits a number of exceptional characteristics.

The Dirichlet series Σe^{-ns} is the simplest of all such series, and the function $S(s)$, viz., $e^{-s}/(1-e^{-s})$, is expressible in terms of elementary functions. The finite singularities of $S(s)$ are seen to be isolated, but they are infinite in number.

M. Mellin* has given an asymptotic expansion of $\log \Pi(1+z/e^n)$, but the finite term in the expansion occurs in the form of an infinite series.† It is also noteworthy that this expansion is not merely asymptotic, but exact, the infinite series in descending powers of z being convergent.

Thus the properties of the function $\Pi(1+z/e^n)$ are quite unlike those of $\Pi(1+z/e^{n^k})$ $(k > 1)$ (which belongs to our first class), and we shall see that they also bear little resemblance to the properties of the function

$$\Pi(1+z/e^{n^k}) \quad (k < 1),$$

of our second class.

Abstract.‡

The simplest function of our second class is that for which we have $a_n = \exp(\rho n^{1/k})$, where $\Re\rho > 0$ $(k > 1)$. Two generalised forms of this function are considered, corresponding to $a_n = \exp(\rho n^{1/k})\, n^{-\lambda}$, and $\exp[\rho(n^{1/k}+\rho_1 n^{1/k_1}+\ldots+\rho_\mu n^{1/k_\mu})]$ respectively, where λ and ρ may be complex (subject to the condition $\Re\rho > 0$), but where $k, k_1, \ldots, \rho_1, \rho_2, \ldots$ are restricted to be real, and where we have $k_r > k$. These forms of a_n

* *Loc. cit.*

† This series exhibits peculiarities analogous to those mentioned in connexion with our first class of functions. It may be remarked that if the integral function be taken to be $\Pi(1+ze^{-n\omega})$, where ω is complex, the series in question no longer remains finite for all values of z. Cf. my paper cited above, § 12.

‡ The Abstract was added at the request of the Council.

give rise to the Dirichlet series,

$$\text{(I.)}\ \sum_{n=1}^{\infty} \exp(-sn^{1/k})\, n^{\lambda s}, \quad \text{and} \quad \text{(II.)}\ \sum_{n=1}^{\infty} \exp[-s(n^{1/k}+\rho_1 n^{1/k_1}+\ldots+\rho_\mu n^{1/k_\mu})],$$

respectively. (The factor ρ is omitted, as we do not thereby impair the generality of the series.) These series converge when $\Re s > 0$, and define analytic functions for this range of values of s. Analytic functions $S(s)$ are found, which represent the values, for any value of s, obtained by the process of continuation from the Dirichlet series.

For the first case we have

$$S(s) = k\Gamma(k\lambda s+k)\, s^{-k\lambda s-k}+P(s,\lambda), \tag{1}$$

where

$$P(s,\lambda) = \sum_{n=0}^{\infty} \frac{(-s)^n}{\Gamma(n+1)}\, \zeta(-n/k-\lambda s).$$

In the second case,

$$S(s) = \psi(s)-\tfrac{1}{2}+Q(s), \tag{2}$$

where $Q(s)$ is an integral function of (apparent) order $k/(k-1)$, with the origin for a simple zero, and where

$$\psi(s) = ks^{-k} \sum_{m=0}^{\infty} \left[(-)^m \sum_{\Sigma a_\nu = m} \left\{ \prod_{\nu=1}^{\mu} \left(\frac{\rho_\nu^{a_\nu}}{\Gamma(a_\nu+1)} \right) \Gamma\left(\sum_{\nu=1}^{\mu} ka_\nu/k_\nu + k \right) s^{\sum_1^{\mu}(1-k/k_\nu)a_\nu} \right\} \right], \tag{3}$$

the Σ inside the square brackets being taken over all positive or zero integral values $a_1, a_2, \ldots, a_\mu$, such that $a_1+a_2+\ldots+a_\mu = m$.

The method by which the first result is obtained (I., § 1) may be sketched as follows. We first suppose s and λ real and positive. Following the method of Lindelöf,* we take a contour C embracing the positive real axis, and cutting it in the point a, where $0 < a < 1$, and consider the integral

$$I = \int_C \frac{e^{-sx^{1/k}} x^{\lambda s}\, dx}{e^{2\pi x i}-1}$$

taken over C. The singularities of the integrand are at the points $n = 1, 2, 3, \ldots$, and we obtain for the Dirichlet series, $S(s) = I$. The integral I may be divided into the three parts

$$I_1 = -\int_{C_1} e^{-sx^{1/k}} x^{\lambda s}\, dx, \qquad I_2 = \int_{C_1} \frac{e^{-sx^{1/k}} x^{\lambda s}\, dx\, e^{2\pi x i}}{e^{2\pi x i}-1},$$

and

$$I_3 = -\int_{C} \frac{e^{-sx^{1/k}} x^{\lambda s}\, dx\, e^{-2\pi x i}}{e^{-2\pi x i}-1},$$

* *Le Calcul des Résidus*, p. 56.

where C_1 and C_2 denote the parts of C respectively above and below the real axis. In I_1 the contour may be deformed into the line from a to infinity, taken along the real axis, and in I_2 and I_3, C_1 and C_2 may be deformed into the straight lines $a+\iota\infty$ to a, and a to $a-\iota\infty$ respectively.

It is easily shown that I_1 tends to the limit $s^{-k\lambda s-k}\,k\Gamma(k\lambda s+k)$ as a tends to zero (when s and λ are positive), while I_2+I_3 is shown to tend to the limit

$$2\mathfrak{R}\int_0^\infty \exp\left[-st^{1/k}e^{\frac{1}{2}\pi\iota/k}\right] t^{\lambda s}e^{\frac{1}{2}\pi\iota\lambda s}\frac{\iota\,dt}{e^{2\pi t}-1}.$$

If the factor $\exp\left[-st^{1/k}e^{\frac{1}{2}\pi\iota/k}\right]$ under the integral sign in this last expression be replaced by its expansion in powers of s, and if the integration be effected term by term, we obtain an expression for I_2+I_3 which leads to the result (1). Now the right-hand side of (1) defines an analytic function of the two variables s and λ for all values of s and λ, and we have proved that it represents the Dirichlet series when s and λ are real and positive. It follows that it is the analytic function representing all values obtained by continuation, for the variables s and λ, from the Dirichlet series.

The analytic function (1) is in general multiform, the multiformity depending on $s^{-k\lambda s-k}$. If a cut be made along the negative real axis preventing the point s from making a circuit of the origin, the function obtained by continuation in the cut plane from the Dirichlet series is evidently uniform. [λ is now supposed to be a constant.] It is shown that *this function, which is denoted by* $S_0(s)$ *corresponds to the determination*

$$s^{-k\lambda s-k} = \exp\left[-(k\lambda s+k)\log s\right],$$

where $\log s$ *has its principal value.*

The function $S(s)$ *(in the uncut plane) has* $s=0$ *for its sole finite singularity.* The apparent poles at the poles of $\Gamma(k\lambda s+k)$ are neutralised by the poles of $\zeta(-n/k-\lambda s)\,[n=1, 2, \ldots]$.

In the particular case when λ *is zero, the function* $P(s, 0)$ *becomes an integral function of* s*, whose apparent order is shown to be* $k/(k-1)$ (I., § 4).

The result (2) is established on the same general lines (I., § 5). *The series for* $\psi(s)$ *converges for all values of* s*, and* $\psi(s)$*, and therefore also* $S(s)$*, evidently has* $s=0$ *for its sole finite singularity.*

The function obtained by continuing the Dirichlet series over the s *plane cut along the negative real axis is determined by assigning to every term* s^θ *of* $\psi(s)$ *the value* $\exp(\theta \log s)$*, where* $\log s$ *has its principal value.*

It is important to know something of the behaviour of $\psi(s)$ when $|s|$ is large. It is shown (II., § 4) that, *when* $|s|$ *is sufficiently large, we have*

$$|\psi(s)| < K \exp[|s|^{1+\epsilon}]. \tag{4}$$

In order to establish this result it is previously shown (I., § 5), that *if the series for* $\psi(s)$ *be arranged in order of non-decreasing indices of* s, *each term of the old expression being retained as a separate term of the new one,* we have*

$$\psi(s) = s^{-k}\left[\Gamma(k+1) + \sum_{n=1}^{\infty} c_n s^{\theta_n}\right], \tag{5}$$

where $0 < \theta_1 \leqslant \theta_2 \leqslant \ldots, \qquad \theta_n > n^{1/(\mu+1)}/K,$

and $|c_n| < [K/\theta_n]^{\theta_n}.$

In the case when $a_n = \exp(n^{1/k} + \rho_1 n^{1/k})$, the general formula becomes fairly simple. We have (I., § 6)

$$S(s) = \psi(s) - \tfrac{1}{2} + Q(s),$$

where $$\psi(s) = s^{-k}\left[\Gamma(k+1) + k\sum_{n=1}^{\infty} \frac{(-\rho_1)^n s^{n(1-k_1)}}{\Gamma(n+1)}\Gamma(nk/k_1 + k)\right],$$

so that the series within square brackets is an integral function of the argument $s^{(k_1-k)/k_1}$ *of order* $k_1/(k_1-k)$.

[It is not important to know the coefficients in the function $Q(s)$. Those of the *singular* part $\psi(s)$ of $S(s)$, however, appear in the asymptotic expansion of $\log \Pi(1+z/a_n)$.]

Having this knowledge of the functions generated by the Dirichlet series I. and II., we may attack the problem of finding asymptotic expansions for the corresponding integral functions $\Pi(1+z/a_n)$. We are met, however, at the outset, by a difficulty which does not occur in the corresponding theory of the integral functions of finite non-zero order. We require to use the integral $\int \frac{z^s S(s)\, ds}{s \sin \pi s}$, taken along parts of the line $\Re s = -l\ (l > 0)$. This integral will not exist in any case unless $|S(s)| < K \exp(\pi |s|)$. Now the Dirichlet series itself can give us no information as to the behaviour of $S(s)$ on $\Re s = -l$, for it does not con-

* *I.e.*, if two terms of the old expression have the same index for s, they are not to be combined into one term in the new series.

verge there. On the other hand, if we appeal, for example in our second case, to the formula (2), we only know concerning $Q(s)$ that it is an integral function of order $k/(k-1)$, and therefore that when $|s|$ is large, $|S(s)| < K \exp[|s|^{k/(k-1)+\epsilon}]$. This result is clearly inadequate for our purposes, and it is necessary to provide some means of establishing the better inequality for $|S(s)|$ which in fact exists, for points on the line $\Re s = -l$. This means is afforded by the following general theorem, which is proved in II., § 1.

Let $F(z)$ be an analytic function with a finite number of singularities and possessing the following properties :—

(1) *In the region R consisting of the whole of the plane on one side of a straight line L, and including the points of L, a branch $F_0(z)$ of $F(z)$ has no singularities, and for all points of R, and for an arbitrarily small ϵ,*

$$|F_0(z)| < K \exp(r^{\rho-1+\epsilon}),$$

where $\rho > 1$, and $r = |z|$.

(2) *In the whole plane, assuming the finite singularities to be excluded by small circles of radius δ,*

$$|F(z)| < K \exp(r^{\rho+\epsilon}),$$

for an arbitrary ϵ.

Let L' be the straight line parallel to L and at a distance l from it on the side of L remote from R, and let R' be the region of the plane on the same side of L' as R. Let a system of cuts be made so as to prevent the point z, when it is restricted to the region R', from circumscribing any singularity of $F(z)$, so that $F_0(z)$, when continued over R', generates a uniform function. Then, for any arbitrary ϵ, we shall have, for all points of R',

$$|F_0(z)| < K \exp(r^{\rho-1+\epsilon}).$$

From this theorem it is easily deduced that on $\Re s = -l$, we have

$$|S_0(s)| < K \exp[-|s|^{1/(k-1)+\epsilon}],$$

where $S_0(s)$ denotes the function obtained from the Dirichlet series I. or II. by continuation over the s-plane cut along the negative real axis. Provided, then, that we assume $k > 2$, the integral $\int \frac{S_0(s)\, z^s\, ds}{s \sin \pi s}$, taken over the part of the line $\Re s = -l$ either above or below the real axis, will exist.*

* It should be noted that s cannot describe the whole line continuously in the cut plane.

The problem of finding an asymptotic expansion for $\log F(z)$ is greatly simplified if $S(s)$ is known to be a uniform function. This can never be the case for the function II., but occurs in the case of I., provided λ is zero and k is an integer. This simplest case is considered first, and may be treated on the lines of M. Mellin's paper cited above. (II., §§ 2, 3.)

We find that, *if*

$$F(z) = \prod_{n=1}^{\infty} [1+z/\exp(\rho n^{1/k})],$$

where $\Re\rho > 0$, *and where* k *is an integer not less than* 3,

$$\log F(z) = (k+1)^{-1}\rho^{-k}(\log z)^{k+1} + 2(k+1)^{-1}\rho^{-k}\sum_{n=1}^{k} {}_{k+1}C_{2n}(2^{2n-1}-1)\pi^{2n}B_{2n}(\log z)^{k+1-2n} - \tfrac{1}{2}\log z - \rho\zeta(-1/k) + \sum_{m=1}^{N}(-)^{m-1}\frac{S(-\rho m)}{m}z^{-m} + J_N, \quad (6)$$

where $k = \frac{1}{2}k$ *or* $\frac{1}{2}(k+1)$, *according as* k *is even or odd, the* B*'s are Bernoulli's numbers,* $S(s)$ *is the function* (1) (*with* $\lambda = 0$), *and where*

$$\lim_{|z|\to\infty} |J_N z^N| = 0.$$

This expansion clearly cannot be valid in the vicinity of the zeros of $F(z)$. It is, in fact, established first for the case *when* z *is excluded from the spiral strip contained by the curves* $z = -\exp(\rho x \pm \delta\iota)$, *where* δ *is an arbitrarily small positive number, and where* x *takes all real values from* $-\infty$ *to* $+\infty$ (§ 2). The region thus excluded is of the type usually considered in the theory of asymptotic expansions. It is then shown (§ 3) that *the region from which* z *is excluded may be narrowed* (*outside the circle* $|z| = 1$) *into the spiral strip between the curves*

$$z = \exp[\rho x \pm \iota\delta(\log r)^{-(k-2)+\delta}],$$

where δ *is arbitrarily small.*

If λ is not zero, the form of the singularity at $s = 0$ of the function defined by I. makes the extension of our methods to this case, if not impossible, at any rate a matter of great difficulty.

For the function $S(s)$ defined by II., however, the singular part $\psi(s)$ is the sum of an infinite number of terms of the form $c_n s^{\theta_n}$, and, although the sum represents a complicated singularity, we are able to consider the effect of each term separately. We consider the function

$$F(z) = \prod_{n=1}^{\infty}(1+z/a_n),$$

where $$a_n = \exp\left[\rho\left\{n^{1/k}+\rho_1 n^{1/k_1}+\rho_2 n^{1/k_2}+\ldots+\rho_\mu n^{1/k_\mu}\right\}\right],$$

and where $k_\mu > \ldots > k_1 > k > 2$, and $\Re\rho > 0$.

The assumption $k > 2$ is certainly necessary in order that we may have $|S_0(s)| < \exp(\epsilon|s|)$ on $\Re s = -l$, and it seems necessary to this end to introduce the additional restriction that $\rho_1, \rho_2, \ldots$ shall be real. With these assumptions the inequality for $S_0(s)$ is readily deduced from the general theorem given above.

The following expansion is obtained (II., §§ 4, 5)

$$\log F(z) = -\rho\left[\xi(-1/k)+\sum_{\nu=1}^{\mu}\rho_\nu\xi(-1/k_\nu)\right]-\tfrac{1}{2}\log z + \sum_{n=0}\frac{\rho c_n \sin(k-\theta_n)\pi}{\pi}\left(\frac{\log z}{\rho}\right)^{k-\theta_n+1}\sigma_n,$$

where

$$\sigma_n = \Gamma(\theta_n-k-1)+2\sum_{m=1}\Gamma(2m+\theta_n-k-1)\frac{(2^{2m-1}-1)\pi^{2m}}{2m!}B_{2m}(\log z)^{-2m}, \quad (7)$$

where $s^{-k}\sum_{n=0}^{\infty} c_n s^{\theta_n}$ *is the series* (5). *The infinite series is to be arranged in order of increasing indices of* $1/\log z$, *and, when we stop at any term, say of order* $(\log z)^{-p}$, *we have, if* R *is the remainder,*

$$\lim_{|z|\to\infty}|R(\log z)^p| = 0.$$

In the proof it is assumed for simplicity that ρ is real, and that z *is excluded from the strip between the straight lines*

$$z = \exp\left[\rho\left\{x^{1/k}+\rho_1 x^{1/k_1}+\ldots+\rho_\mu x^{1/k_\mu}\right\}\pm\iota\delta\right];$$

the expansion may, however, be proved for ρ complex, and when z is excluded from a narrower spiral strip.

We have, by the ordinary theory of residues,

$$\log F(z) = -\frac{1}{2\iota}\int_C \frac{z^s S_0(\rho s)\,ds}{s\sin\pi s},$$

where $S_0(\rho s)$ is the function derived by continuation, in the plane cut along the negative real axis, from the Dirichlet series II. (with ρs as argument instead of s), and where the contour C embraces the positive real axis and passes between the points 0 and 1. The contour C may be deformed into the contour C' consisting of the line from $-l+\infty\iota$ to $-l$ $(0 < l < 1)$, the circle $|z| = l$ described clockwise from $-l$ to $-l$, and

the line from $-l$ to $-l-\infty\,\iota$. Each term of $S_0(\rho s)$ of the form $c_n(\rho s)^{\theta_n - k}$ is then shown to contribute a divergent but asymptotic series proceeding in descending (non-integral) powers of $\log z$; while the uniform part $-\frac{1}{2}+Q(\rho s)$ contributes the first two terms on the right-hand side of (7). The necessity of dealing with an infinite series of terms, each of which generates a divergent series, is the main cause of the complexity of the proof of the final expansion.

The line of proof adopted is difficult to extend to the case when $\rho_1, \rho_2, \ldots$ are complex, and it must break down when $k < 2$. The expansion, however, is valid in each case, and even when $k_1, k_2, \ldots$ (but not k) are complex, provided that $\mathfrak{R}\, 1/k_\nu < 1/k < 1$. The proof of this, however, cannot be given here. It depends on a comparison of the known form of the expansion in our restricted case with a general form obtained by an entirely different method, which is mainly arithmetical in character. This method is itself unable to determine the general coefficients of its result, but it is easily shown that they must be those occurring in (7).*

There is, however, one interesting point which this principle is unable to decide, as to whether the expansion (6) for the case $a_n = \exp(\rho n^{1/k})$ (where k is an integer), which contains an asymptotic series in descending powers of z, is valid when $k = 2$.

It is not possible to apply our methods to determine asymptotic expansions for $\log F(z)$ in cases where $|a_n|$ is of less order in n than $\exp(n^\epsilon)$ for arbitrarily small values of ϵ. (On this point, see II., § 8.) The functions $S(s)$ generated by the corresponding Dirichlet series Σa_n^{-s} can, however, be determined in a number of cases. In Part I. (§§ 7–9) the following series are considered :—

$$\text{(III.)} \quad \sum_{n=2}^{\infty} \exp[-s(\log n)^{1+k}], \quad k > 0;$$

and its generalisation

$$\Sigma \exp[-s\{(\log n)^{1+k} + \rho_1 (\log n)^{1+k_1} + \ldots + \rho_\mu (\log n)^{1+k_\mu}\}],$$

where $k > k_1 > \ldots$, and $k > 0$;

$$\text{(IV.)} \quad \sum_{n=3}^{\infty} \exp[-s \log n \log\log n];$$

* I hope shortly to publish an account of this general theory, which applies to all integral functions of our second class which arise in a natural manner, under the title "On a Class of Integral Functions."

and $$\Sigma \exp[-s \log n (\log_p n)^k],$$

where $$\log_p n = [\log \log \ldots (p \text{ times})] n.$$

For the series (III.), we find (I., § 7)

$$S(s) = \psi(s) - \tfrac{1}{2} + P(s),$$

where $P(s)$ is an integral function of order unity, and where

$$\psi(s) = (1+k)^{-1} \sum_{n=0}^{\infty} s^{-(n+1)/(1+k)} \frac{\Gamma\{(n+1)/(1+k)\}}{\Gamma(n+1)},$$

so that $\psi(s)$ is an integral function, of the argument $s^{-1/(1+k)}$, of order $(k+1)/k$.

For (IV.), we find (I., § 9),

$$S(s) = s^{-1} T(\log s + s^{-1}) + P(s),$$

where $P(s)$ is an integral function of order unity, and $T(x)$ is an integral function of x of infinite order.

In all the cases considered, $S(s)$ is shown to have $s = 0$ for its sole finite singularity.

PART I.

Dirichlet Series.

1. We begin with the series

$$\sum_{n=1}^{\infty} \exp(-sn^{1/k}) n^{\lambda s} \quad (k > 1),$$

where λ is any complex number, and $n^{\lambda s}$ is interpreted to mean $\exp(\lambda s \log n)$, $\log n$ having its real value.

We shall establish the following results :—

The function $S(s)$ is

$$k\Gamma(k\lambda s + k) s^{-k\lambda s - k} + P(s, \lambda),$$

where $$P(s, \lambda) = \sum_{n=0}^{\infty} \frac{(-s)^n}{\Gamma(n+1)} \zeta(-n/k - \lambda s).$$

$S(s)$ has $s = 0$ for its sole finite singularity.

If a cut be made in the s-plane along the negative real axis, and if $S_0(s)$ be the function which is defined by continuation in the cut plane

from the Dirichlet series,

$$S_0(s) = k\Gamma(k\lambda s+k)\exp[-(k\lambda s+k)\log s]+P(s,\lambda),$$

where log s has its principal value.

Let $x^{1/k}$ be interpreted, as usual, to mean $\exp(\log x/k)$, where $\log x$ is real when x is real and positive.

We shall suppose for the present that s and λ are real and positive. Consider the integral

$$I = \int_{L_1+L_2} e^{-sx^{1/k}} \frac{x^{\lambda s}dx}{e^{2\pi x\iota}-1},$$

taken along the contour L_1+L_2, where L_1 consists of the straight lines $+\infty+\iota\beta$ to $\alpha+\iota\beta$ to α; L_2 of the lines α to $\alpha-\iota\beta$ to $+\infty-\iota\beta$, β being any positive number, and α being any number between 0 and 1.

The integrand is a uniform function of x for $\Re x > 0$, and the integral is convergent at infinity. Also the sum of the residues of the integrand at those singularities which lie inside L_1+L_2, viz., the points 1, 2, 3, ..., is $\frac{1}{2\pi\iota}\sum_{n=1}^{\infty} e^{-sn^{1/k}}n^{\lambda s}$, which series is convergent and has $\frac{1}{2\pi\iota}S(s)$ for its sum. Thus we have

$$I = S(s). \tag{1}$$

Now we have

$$I = -\int_{L_1} e^{-sx^{1/k}}x^{\lambda s}dx+\int_{L_1} e^{-sx^{1/k}}\frac{x^{\lambda s}dx}{1-e^{-2\pi x\iota}}+\int_{L_2} e^{-sx^{1/k}}\frac{x^{\lambda s}dx}{e^{2\pi x\iota}-1}. \tag{2}$$

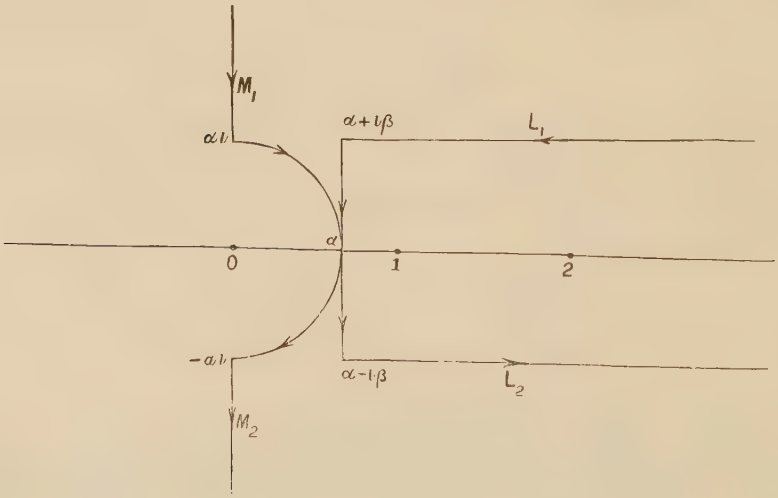

Let M_1 be the straight line from $+\infty\iota$ to $a\iota$, together with the quadrant of the circle $|x| = a$ from $a\iota$ to a, and let M_2 be the reflection of M_1 in the real axis.

Now $\int e^{-sx^{1/k}} \frac{x^{\lambda s}\,dx}{1-e^{\pm 2\pi x\iota}}$, taken along a part of the circle $|x| = R$, intercepted either between L_1 and M_1, or between M_2 and L_2, tends to zero as R tends to infinity. For, if x be any point of either piece of the circle, we have

$$\lim_{R\to\infty} \left| x^2 . e^{-sx^{1/k}} x^{\lambda s} \frac{1}{1-e^{\pm 2\pi x\iota}} \right| = 0.$$

Hence, in the last two integrals on the right-hand side of (2), we may deform L_1 into M_1, and L_2 into M_2, since we do not thereby pass over singularities of the integrands. We therefore have, from (1) and (2),

$$\left.\begin{aligned} S(s) &= I_1 + I_2 + I_3 \\ \text{where} \qquad I_1 &= -\int_{L_1} e^{-sx^{1/k}} x^{\lambda s}\,dx \\ I_2 &= -\int_{M_1,\ \frac{1}{2}\pi} e^{-sx^{1/k}} x^{\lambda s} \frac{dx}{e^{-2\pi x\iota}-1} \\ I_3 &= \int_{M_2,\ 0} e^{-sx^{1/k}} x^{\lambda s} \frac{dx}{e^{2\pi x\iota}-1} \end{aligned}\right\}, \tag{3}$$

where $\int_{C,\ \phi}$ means that the integral is taken along the contour C, and that x is supposed to have the argument ϕ at the starting point of C.

First consider the integral I_1.

The contour L_1 may be deformed into the straight line from $+\infty$ to a along the real axis, since the integral is convergent at infinity, and since we do not pass over singularities of the integrand. Hence

$$\begin{aligned} I_1 &= -\int_{\infty}^{a} e^{-sx^{1/k}} x^{\lambda s}\,dx \\ &= s^{-k\lambda s-k} \int_{(a/s)^k}^{\infty} e^{-y} y^{k\lambda s} k y^{k-1}\,dy, \end{aligned}$$

when we write $$x = (y/s)^k.$$

Since $\lambda s > 0$, this last integral is convergent at the origin. Hence,

making α tend to zero, we have

$$I_1 = ks^{-k\lambda s-k}\int_0^\infty e^{-y}y^{k\lambda s+k-1}dy+\epsilon(\alpha)$$

$$= s^{-k\lambda s-k}k\Gamma(k\lambda s+k)+\epsilon(\alpha).* \tag{4}$$

Next consider I_2 and I_3.

On the straight portion of M_1, since x starts at $+\infty\iota$ with the argument $\frac{1}{2}\pi$, we have $x = te^{\frac{1}{2}\pi\iota}$ and $x^{1/k} = t^{1/k}e^{\frac{1}{2}\pi\iota/k}$, where t is real, and similarly, on the straight portion of M_2, $x^{1/k} = t^{1/k}e^{-\frac{1}{2}\pi\iota/k}$. Hence, dividing I_2 and I_3 into parts corresponding to the straight and curved parts of the respective contours, we have

$$\left.\begin{aligned} I_2 &= I_2'+I_2'' \\ I_3 &= I_3'+I_3'' \\ \text{where}\quad I_2' &= -\int_\infty^a \exp\left[-st^{1/k}e^{\frac{1}{2}\pi\iota/k}\right]t^{\lambda s}e^{\frac{1}{2}\pi\iota\lambda s}\frac{\iota\,dt}{e^{2\pi t}-1} \\ I_3' &= \int_a^\infty \exp\left[-st^{1/k}e^{-\frac{1}{2}\pi\iota/k}\right]t^{\lambda s}e^{\frac{1}{2}\pi\iota\lambda s}\frac{-\iota\,dt}{e^{2\pi t}-1} \\ I_2'' &= \int_{a\iota,\ \frac{1}{2}\pi}^{a} e^{-sx^{1/k}}x^{\lambda s}\frac{-dx}{e^{-2\pi x\iota}-1} \\ I_3'' &= \int_{a,\ 0}^{-a\iota} e^{-sx^{1/k}}x^{\lambda s}\frac{dx}{e^{2\pi x\iota}-1} \end{aligned}\right\}, \tag{5}$$

the last two integrals being taken along arcs of the circle $|x| = a$.

It may be shown that $I_2''+I_3'' = \epsilon(a)$. (6)

If x be a point of the contour of I_2'' or of I_3'', we have

$$\left|e^{-sx^{1/k}}x^{\lambda s}\frac{1}{e^{\pm 2\pi x\iota}-1}\right| < K|x|^{\lambda s-1},$$

where K does not depend on a. It follows, since $\lambda s > 0$, that I_2'' and I_3'' tend to zero with a, and we have the result (6).

Returning to (5), let us now consider $I_2'+I_3'$.

* I shall always use $\epsilon(x)$ to mean a function of x which tends to zero as x tends to its limit, and shall use the same symbol for all such functions. In the same way to express the fact that $|f(x)|$ is always less than some finite number, I shall write $|f(x)| < K$, and shall always use the same K.

We have $I_2'+I_3' = 2\mathfrak{R}\int_\alpha^\infty \exp[-st^{1/k}e^{\pi\iota/2k}]\,t^{\lambda s}e^{\frac{1}{2}\pi\iota\lambda s}\frac{\iota\,dt}{e^{2\pi t}-1}$

$$= 2\mathfrak{R}\int_0^\infty \exp[-st^{1/k}e^{\pi\iota/2k}]\,t^{\lambda s}e^{\frac{1}{2}\pi\iota\lambda s}\frac{\iota\,dt}{e^{2\pi t}-1}+\epsilon(\alpha), \qquad (7)$$

since the last integral is convergent at $t=0$, on account of the factor $t^{\lambda s}$. Calling the integral on the right-hand side of (7) I_4, we have, from (3), (4), (5), (6), (7),

$$S(s) = k\Gamma(k\lambda s+k)\,s^{-k\lambda s-k}+I_4+\epsilon(\alpha);$$

and therefore, since every term but the last is independent of α,

$$S(s) = k\Gamma(k\lambda s+k)\,s^{-k\lambda s-k}+I_4. \qquad (8)$$

We shall now study the integral I_4, where s and λ are still supposed real and positive.

We have $$\exp[-st^{1/k}e^{\pi\iota/2k}] = \sum_{n=0}^\infty \frac{(-s)^n}{\Gamma(n+1)}\,e^{n\pi\iota/2k}\,t^{n/k}.$$

Multiplying by $e^{\pi\iota\lambda s}.2\iota\,t^{\lambda s}/(e^{2\pi t}-1)$, and integrating term by term from $t=0$ to infinity,* we have

$$I_4 = \mathfrak{R}\,2\iota e^{\frac{1}{2}\pi\iota\lambda s}\sum_{n=0}^\infty \frac{(-s)^n}{\Gamma(n+1)}\,e^{\frac{1}{2}n\pi\iota/k}\int_0^\infty \frac{t^{n/k+\lambda s}}{e^{2\pi t}-1}\,dt$$

$$= \sum_{n=0}^\infty \frac{(-s)^n}{\Gamma(n+1)}\left[-2\sin\left\{\tfrac{1}{2}\pi(n/k+\lambda s)\right\}\right]\int_0^\infty \frac{t^{n/k+\lambda s}}{e^{2\pi t}-1}\,dt.$$

Now when $\mathfrak{R}z>0$, we have

$$\int_0^\infty \frac{t^z\,dt}{e^{2\pi t}-1} = -\tfrac{1}{2}\operatorname{cosec}(\tfrac{1}{2}\pi z)\,\zeta(-z).$$

We therefore have

$$I_4 = \sum_{n=0}^\infty \frac{(-s)^n}{\Gamma(n+1)}\,\zeta(-n/k-\lambda s).$$

We now obtain from (8) the result

$$S(s) = k\Gamma(k\lambda s+k)\,s^{-k\lambda s-k}+\sum_{n=0}^\infty \frac{(-s)^n}{\Gamma(n+1)}\,\zeta(-n/k-\lambda s). \qquad (9)$$

* The justification of this step offers no special difficulty, either here or elsewhere where it occurs in the paper. I shall omit the proofs throughout.

Using the formula

$$\zeta(z) = 2(2\pi)^{z-1} \sin(\tfrac{1}{2}\pi z)\, \Gamma(1-z)\, \zeta(1-z),$$

we obtain from (9) the alternative form

$$S(s) = k\Gamma(k\lambda s+k)\, s^{-k\lambda s-k}$$

$$+2(2\pi)^{-\lambda s-1} \sum_{n=0}^{\infty} \left[\frac{(-)^{n-1} s^n}{\Gamma(n+1)} \sin\{\tfrac{1}{2}\pi(n/k+\lambda s)\} \right.$$

$$\left. \times \Gamma(n/k+\lambda s+1)\, \zeta(n/k+\lambda s+1) \right]. \qquad (9)'$$

The results (9) and (9)′ have been established on the assumption that s and λ are real and positive. But if s and λ are any complex numbers such that $-(n+k\lambda s)/k$ is not unity [*i.e.*, a singularity of $\Gamma(1-z)$] for any value of n from 0 to infinity, the series on the right-hand side of (9)′ is convergent.*

Also it can be shown that the right-hand side of (9)′ can be differentiated term by term with respect to s or λ, so that this expression is an analytic function of s and λ for all values of s and λ, except $s = 0$ and such pairs of values of s and λ as make $k(1-\lambda s)$ zero or a positive integer.

Now the Dirichlet series defines an analytic function of s and λ for the range of values defined by $\Re s > 0$, λ being allowed to take any value. Moreover, we have seen that when s and λ are real and positive, the right-hand side of (9) or of (9)′ agrees in value with the Dirichlet series. It follows that the right-hand side of (9) is the analytic function of s and λ obtained by continuation from the Dirichlet series; or, since λ is supposed to have a constant value, we may say that for any complex value of λ, the right-hand side of (9) defines, for all values of s except isolated singularities, the analytic function of s obtained by continuation from the Dirichlet series, which is defined for $\Re s > 0$. This is the first of our results.

---

* For $\sin\{\frac{1}{2}\pi(n/k+\lambda s)\}$ and $\zeta(n/k+\lambda s+1)$ are finite for all values of n, while when n is large $|\Gamma(n/k+\lambda s+1)/\Gamma(n+1)|$ behaves like $n^{-[(k-1)/k]n}$. The series therefore converges like $\Sigma[s/\{2\pi n^{(k-1)/k}\}]^n$.

2. We shall now establish the third result.

The function $P(s, \lambda)$ is uniform, so also is $\Gamma(k\lambda s+k)$: $s^{-k\lambda s-k}$ means $\exp[-(k\lambda s+k)\log s]$, and the question we have to decide is the relation between the determinations of $\log s$ and the various branches of $S(s)$ as arising from the primary branch defined by the Dirichlet series for $\Re s > 0$.

The term $n^{\lambda s}$ which occurs in the Dirichlet series means $\exp(\lambda s \log n)$, where $\log n$ is real and is a uniform function of λ. Then, for a given real and positive s, the Dirichlet series defines a uniform function of λ. Again, $\log s$ being taken real, the right-hand side of (9) defines a uniform function of λ. These two uniform functions agree in value for all real and positive values of λ; they therefore agree for all values of λ. We may restate this result by saying that for any complex λ, if s is real and positive, the Dirichlet series is equal to the right-hand side of (9), $\log s$ being taken real.

If now a cut be made in the s-plane along the negative real axis, and if $S_0(s)$ be the function defined in the cut plane by continuation from the Dirichlet series, then $S_0(s)$ must be the continuation in the cut plane of the right-hand side of (9). Now in the cut plane $\log s$, which is real when s is real and positive, must have its principal value, *i.e.*, it must have the modulus of its imaginary part not greater than π. This gives the desired determination for $s^{-k\lambda s-k}$ corresponding to the branch $S_0(s)$.

3. The point $s = 0$ is clearly a singularity of $S(s)$. We have to show that $S(s)$ has no other finite singularity.

The possible finite singularities other than $s = 0$ are those values of s which make $-(n/k+\lambda s)$ equal to 1 for some positive or zero integral value of n. Suppose then that

$$-(n/k+\lambda s_n) = 1:$$

the term $\zeta(-n/k-\lambda s)$ then becomes infinite at $s = s_n$.

In the vicinity of this point we have

$$\zeta(-n/k-\lambda s) = \zeta\{(\lambda(s_n-s)+1\} = \frac{1}{\lambda(s_n-s)} + \text{a finite expression},$$

and
$$P(s, \lambda) = \frac{(-s_n)^n}{\lambda\Gamma(n+1)} \frac{1}{s_n-s} + \text{a finite expression.} \qquad (1)$$

Now
$$\Gamma(k\lambda s+k) = \Gamma[-n+k\lambda(s-s_n)]$$

has a simple pole at the point $s = s_n$, with the residue

$$\frac{1}{k\lambda} \frac{(-1)^n}{\Gamma(n+1)}.$$

Hence the *general* branch of the function $k(\Gamma k\lambda s+k)s^{-k\lambda s-k}$, in the vicinity of $s = s_n$, is equal to

$$\frac{(-1)^n}{\lambda\Gamma(n+1)} \frac{1}{s-s_n} \exp[-(k\lambda s_n+k)(\log s_n+2p\pi\iota)] + \text{a finite expression}$$

$$= \frac{(-)^n}{\lambda\Gamma(n+1)} \exp[n(\log s_n+2p\pi\iota)] \frac{1}{s-s_n} + \text{a finite expression}$$

$$= \frac{(-s_n)^n}{\lambda\Gamma(n+1)} \frac{1}{s-s_n} + \text{a finite expression.} \qquad (2)$$

Adding (1) and (2) we see that $S(s)$ is finite at $s = s_n$ and has no singularity there.

There is therefore no finite singularity other than $s = 0$.

4. When λ is not zero the singularity at $s = 0$ is of a complicated nature, being at once a branch-point and transcendental. If, however, $\lambda = 0$, in which case the Dirichlet series is $\sum_{n=1}^{\infty} \exp(-sn^{1/k})$, we obtain a simpler expression for $S(s)$.

We have, on writing $\lambda = 0$ in the formula (9) of § 1,

$$S(s) = \Gamma(k+1)\, s^{-k} + \sum_{n=0}^{\infty} \frac{(-s)^n}{\Gamma(n+1)} \zeta(-n/k)$$

$$= \Gamma(k+1)\, s^{-k} - \tfrac{1}{2} + \sum_{n=1}^{\infty} \frac{(-s)^n}{\Gamma(n+1)} \zeta(-n/k), \qquad (1)$$

since $\zeta(0) = -\frac{1}{2}$.

The infinite series on the right-hand side of (1) is an integral function of s of order $k/(k-1)$.

This result is easily established as follows.

We have $\zeta(-n/k) = -2(2\pi)^{-n/k-1} \sin(n\pi/2k)\, \Gamma(1+n/k)\, \zeta(1+n/k)$.

Now $\zeta(1+n/k) = 1+\epsilon(n)$, since $\lim_{n\to\infty} \zeta(1+n/k) = 1$.

Therefore $$\left| \frac{\zeta(-n/k}{\Gamma(n+1)} \right| < K \frac{\Gamma(1+n/k)}{\Gamma(n+1)}, \qquad (2)$$

and $$\left| \frac{\zeta(-n/k)}{\Gamma(n+1)} \right| > K^{-1}(2\pi)^{-n/k} \frac{\Gamma(1+n/k)}{\Gamma(n+1)}, \qquad (3)$$

where (2) holds for all values of n, and (3) for all values of n for which $n\pi/2k$ differs from every multiple of π by more than some assigned constant, say $\pi/4k$. There will clearly be an infinity of values of n satisfying this condition, since $2.\pi/4k + \pi/2k < \pi$.

Employing Stirling's theorem, we obtain from (2),

$$\left| \frac{\zeta(-n/k)}{\Gamma(n+1)} \right| < \frac{1}{n^{[(k-1)/k)-\epsilon]n}},$$

when n is sufficiently great, and from (3),

$$\left| \frac{\zeta(-n/k)}{\Gamma(n+1)} \right| > \frac{1}{n^{[(k-1)/k)+\epsilon]n}},$$

when n is sufficiently great. From these inequalities it follows, by a well-known result in the theory of integral functions, that $\Sigma(-s)^n \dfrac{\zeta(-n/k)}{\Gamma(n+1)}$ is of (apparent) order $k/(k-1)$.

If k is an integer, the function $S(s)$ is clearly uniform, its only finite singularity being a pole of order k at the origin. If k is not an integer, the origin is a branch-point.

5. We shall now study another generalisation of the series $\Sigma e^{-sn^{1/k}}$, the Dirichlet series

$$\sum_{n=1}^{\infty} \exp\left[-s\left\{n^{1/k} + \sum_{\nu=1}^{\mu} \rho_\nu n^{1/k_\nu}\right\}\right],$$

where $1 < k < k_1 < \ldots < k_\mu$, and where the ρ's are any complex numbers. The series defines an analytic function in the half plane determined by $\Re s > 0$.

For this case we obtain the following results.

(i.) *The function $S(s)$ is*

$$\psi(s) - \tfrac{1}{2} + Q(s),$$

where $Q(s)$ is an integral function of s of order $k/(k-1)$, with the origin for a simple zero, and where

$$\psi(s) = ks^{-k} \sum_{m=0}^{\infty} \left[(-)^m \sum_{\Sigma a_\nu = m} \left\{ \prod_{\nu=1}^{\mu} \left(\frac{\rho_\nu^{a_\nu}}{\Gamma(a_\nu+1)} \right) \Gamma\left(\sum_{\nu=1}^{\mu} k a_\nu/k_\nu + k \right) s^{\sum_{\nu=1}^{\mu} (1-k/k_\nu) a_\nu} \right\}\right],$$

the Σ inside the square brackets being taken over all positive or zero integral values of $a_1, a_2, \ldots, a_\mu$, such that $a_1 + a_2 + \ldots + a_\mu = m$.

(ii.) *$S(s)$ has $s = 0$ for its sole finite singularity.*

(iii.) *If a cut be made along the negative real axis, and if $S_0(s)$ be the function which is the continuation of the Dirichlet series in the cut plane, we have*

$$S_0(s) = \psi_0(s) - \tfrac{1}{2} + Q(s),$$

where $\psi_0(s) = \psi(s)$, with the restriction that every term s^λ appearing in $\psi(s)$ is to be interpreted as $\exp(\lambda \log s)$, $\log s$ having its principal value.

(iv.)* *If the above expression for $\psi(s)$ be arranged in order of non-decreasing indices of s, each term of the old expression being retained as a separate term of the new one, we have*

$$\psi(s) = s^{-k}\left[\Gamma(k+1) + \sum_{n=1}^{\infty} c_n s^{\theta_n}\right],$$

where $0 < \theta_1 \leqslant \theta_2 \leqslant \ldots,$

$$\theta_n > K^{-1} n^{1/(k+1)},$$

and

$$|c_n| < [K/\theta_n]^{\theta_n}.$$

We suppose s real and positive, and proceed almost exactly as in § 1. We obtain a result analogous to (5) of that article, but instead of (6) we have

$$I_2'' + I_3'' = -\tfrac{1}{2} + \epsilon(\alpha).$$

Thus, for s real and positive,

$$\left.\begin{aligned} S_0(s) &= \int_0^\infty \exp\left[-s\left\{x^{1/k} + \sum_1^\mu \rho_\nu x^{1/k_\nu}\right\}\right] dx - \tfrac{1}{2} + Q(s) \\ \text{where} \\ Q(s) &= \Re 2 \sum_{n=1}^{\infty} \frac{(-s)^n}{\Gamma(n+1)} \int_0^\infty \left[t^{1/k} e^{\frac{1}{2}\pi\iota/k} + \sum_1^\mu \rho_\nu t^{1/k_\nu} e^{\frac{1}{2}\pi\iota/k_\nu}\right]^n (e^{2\pi t} - 1)^{-1} dt \end{aligned}\right\}, \qquad (1)$$

and where $S_0(s)$ stands for the Dirichlet series.

That $Q(s)$ is an integral function of order $k/(k-1)$ is easily seen as follows.

The modulus of the coefficient of s^n is less than

$$\frac{2}{\Gamma(n+1)} \int_0^\infty \frac{|[t^{1/k} e^{\pi\iota/2k} + \Sigma \rho_\nu t^{1/k_\nu} e^{\pi\iota/2k_\nu}]^n|}{e^{2\pi t} - 1} dt < \frac{2}{\Gamma(n+1)} \int_0^\infty \frac{[Kt^{1/k}]^n}{e^{2\pi t} - 1} dt$$

$$< \frac{2K^n}{\Gamma(n+1)} \zeta(-n/k) < n^{-[(k-1)/k+\epsilon]n},$$

when n is sufficiently great, by the proof given in § 4.

Hence the apparent order of $Q(s)$ is not greater than $k/(k-1)$.

* This result is required in Part II., where we determine an asymptotic expansion for the integral function corresponding to the Dirichlet series.

The further result, less important than the above for our later requirements, that $Q(s)$ is actually of apparent order $k/(k-1)$ may be established in the following way.

After some finite value of t, depending on ϵ, we have

$$\left| \sum_1^\mu \rho_\nu t^{1/k_\nu} \right| < \epsilon . t^{1/k}.$$

It follows without difficulty that

$$\left| \int_0^\infty \frac{[t^{1/k} e^{\pi\iota/2k} + \Sigma\rho_\nu t^{1/k_\nu} e^{\pi\iota/2k_\nu}]^n}{e^{2\pi t}-1}\, dt \right| = \left| \int_0^\infty \frac{t^{n/k} e^{n\pi\iota/2k}}{e^{2\pi t}-1}\, dt + \epsilon(n) \int_0^\infty \frac{t^{n/k}\, dt}{e^{2\pi t}-1} \right| > K^{-1}\zeta(n/k),$$

for an infinite number of values of n.

We have, then, for an infinite number of values of n,

$$|\text{ the coefficient of } s^n \text{ in } Q(s)\ | > K^{-1}\zeta(-n/k)/\Gamma(n+1) > n^{-[(k-1)/k+\epsilon]n},$$

whence it follows that the apparent order of $Q(s)$ is not less than $k/(k-1)$, and therefore that it must actually be $k/(k-1)$.

Returning to (1), consider the integral

$$\int_0^\infty \exp[-s\{x^{1/k}+\Sigma\rho_\nu x^{1/k_\nu}\}]\, dx.$$

If we make the transformation $x = (y/s)^k$, it becomes

$$\psi(s) = ks^{-k} \int_0^\infty \exp\left[-\sum_{\nu=1}^\mu \rho_\nu s^{1-k/k_\nu} y^{k/k_\nu}\right] y^{k-1} e^{-y}\, dy. \tag{2}$$

Now, since $k_\nu > k$, this expression defines an analytic function of s whose sole finite singularity is at $s = 0$. Therefore, since the Dirichlet series is equal to $\psi(s)-\frac{1}{2}+Q(s)$ when s is real and positive, $\psi(s)-\frac{1}{2}+Q(s)$ must be the function obtained by continuation from the Dirichlet series.

If a cut be made along the negative real axis, since a power s^λ of s occurring in (2) means $\exp(\lambda \log s)$, the logarithm being real, the function $\psi_0(s)-\frac{1}{2}+Q(s)$ obtained by continuation in the cut plane from the Dirichlet series is $\psi(s)-\frac{1}{2}+Q(s)$, with the restriction that any power s^λ occurring in the expression for $\psi(s)$ given by (2) is to mean $\exp(\lambda \log s)$, where $\log s$ has its principal value.

We must now prove that $\psi(s)$ is given by the form in our result (i.). We have

$$\exp\left[-\sum_1^\mu \rho_\nu s^{1-1/k_\nu} y^{k/k_\nu}\right]$$

$$= \sum_{m=0}^\infty \frac{1}{\Gamma(m+1)} [-\Sigma\rho_\nu s^{1-1/k_\nu} y^{k/k_\nu}]^m$$

$$= \sum_{m=0}^\infty \left[(-)^m \sum_{\sum_1^\mu \alpha_\nu = m} \frac{\rho_1^{\alpha_1} \dots \rho_\mu^{\alpha_\mu}}{\Gamma(\alpha_1+1) \dots \Gamma(\alpha_\mu+1)}\, s^{\sum_1^\mu (1-k/k_\nu)\alpha_\nu}\, y^{\sum_1^\mu k\alpha_\nu/k_\nu}\right].$$

Multiplying this expression by $ks^{-k}y^{k-1}e^{-y}$, and integrating term by term from $y=0$ to ∞, a process justifiable without any special difficulty, we obtain

$$\psi(s) = ks^{-k}\sum_{m=0}^{\infty}\left[(-)^m \sum_{\Sigma a_\nu = m} \frac{\rho_1^{a_1}\dots\rho_\mu^{a_\mu}}{\Gamma(a+1)\dots\Gamma(a_\mu+1)}\Gamma(\Sigma k a_\nu/k_\nu+k)\, s^{\Sigma(1-k/k_\nu)a_\nu}\right], \tag{3}$$

which is the desired form.

The term corresponding to $m=0$ is $ks^{-k}\Gamma(k)$ or $\Gamma(k+1)s^{-k}$.

We have now established the results (i.), (ii.), (iii.); it remains to consider (iv.).

Let the general term in (3) be the term $s^{-k}(c_n s^{\theta_n})$ in the expansion

$$\psi(s) = s^{-k}\left[\Gamma(k+1)+\sum_{n=1}^{\infty} c_n s^{\theta_n}\right]$$

arranged in order of increasing indices. Then

$$\theta_n = \Sigma(1-k/k_\nu)a_\nu, \qquad \Sigma k a_\nu/k_\nu = m-\theta_n;$$

and

$$|c_n| < K\frac{K^{a_1}\dots K^{a_\mu}}{\Gamma(a_1+1)\dots\Gamma(a_\mu+1)}\Gamma(\Sigma k a_\nu/k_\nu+k).$$

Now it is easily shown that $\Gamma(a_1+1)\dots\Gamma(a_\mu+1)$, when $a_1+a_2+\dots+a_\mu$ is equal to a given m, is a minimum when

$$a_1 = a_2 = \dots = \frac{\Sigma a_\nu}{\mu} = \frac{m}{\mu}.$$

Then

$$|c_n| < K^{m+1}\{\Gamma(m/\mu+1)\}^{-\mu}\Gamma(\Sigma k a_\nu/k_\nu+k)$$

$$< K^{m+1}\exp\left[\{\Sigma k a_\nu/k_\nu+k\}\log\{\Sigma k a_\nu/k_\nu+k\}-\{\Sigma k a_\nu/k_\nu+k\}+K\right.$$

$$\left.-\mu\left(\frac{m}{\mu}\log\frac{m}{\mu}-\frac{m}{\mu}+\tfrac{1}{2}\log\frac{m}{\mu}-K\right)\right]$$

(on using Stirling's theorem)

$$< K^{m+1}\exp[(m-\theta_n+k)\log(m-\theta_n+k)-m\log m+Km]. \tag{4}$$

Now

$$m-\theta_n = \Sigma\frac{k a_\nu}{k_\nu} < \frac{k}{k_1}\Sigma a_\nu < \frac{k}{k_1}m,$$

and therefore

$$\theta_n > K^{-1}m.$$

Then, from (4), we have

$$|c_n| < K^{\theta_n} \exp[(m-\theta_n)\log m - m\log m]^* < K^{\theta_n}.\theta_n^{-m} < (K/\theta_n)^{\theta_n}.$$

We have, finally, to prove that

$$\theta_n > K^{-1} n^{1/(\mu+1)}.$$

Now the number of terms in the expansion of

$$\left[\sum_1^{\mu} \rho_\nu s^{1-k/k_\nu} y^{k/k_\nu}\right]^m$$

is less than Km^μ, and all the indices of s which occur are greater than m/K_1.

Hence the number n of terms of the type $s^{\sum_1^{\mu}(1-k/k_\nu)\alpha_\nu}$ which have an index less than θ_n is less than

$$\sum_{n=1}^{K_1\theta_n} Km^\mu < K\theta_n^{\mu+1},$$

and therefore $$\theta_n > K^{-1} n^{1/(\mu+1)}.$$

6. In the case when $\mu = 1$, the result (i.) for $\psi(s)$ becomes simpler, and we obtain for the function generated by the Dirichlet series

$$\sum_{n=1}^{\infty} \exp[-s(n^{1/k} + \rho_1 n^{1/k_1})],$$

$$S(s) = s^{-k}\left[\Gamma(k+1) + k\sum_{n=1}^{\infty} \frac{(-\rho_1)^n s^{n(1-k/k_1)}}{\Gamma(n+1)} \Gamma(nk/k_1 + k)\right]$$

$$-\tfrac{1}{2} - \{\zeta(-1/k) + \rho_1 \zeta(-1/k_1)\} s + s^2 Q_1(s),$$

where $Q_1(s)$ is an integral function of order $k/(k-1)$ and where the series in square brackets is an integral function of the argument s^{1-k/k_1} of order $k/(k_1-k)$.

7. We have so far considered Dirichlet series for which $|a_n|$ is of order $\exp(n^\rho)$ for some value of ρ less than unity. The simplest type of function which is of less order than $\exp(n^\rho)$ for all values of ρ, however small, but of greater order than n^ρ for all values of ρ, however large, is

$$\exp[(\log n)^{1+k}],$$

where k is positive.†

---

* We have

$$K^{m+1} \exp[k\log(m-\theta_n+k) + Km] < K^{m+1} \exp(Km) < K^{(m+1)(1+\log K)} < K^m < K^{K\theta_n} < K_{\theta_n},$$

according to our use of the symbol K.

† There exists, of course, an infinity of types, intermediate in order between $\exp(n^\rho)$ and $\exp[(\log n)^{1+k}]$. $\exp[\exp(\log n)^{1/(k+1)}]$ is an example.

Let us consider, then, the Dirichlet series

$$\sum_{n=2}^{\infty} \exp\left[-s(\log n)^{1+k}\right].$$

I shall dwell only on points where the analysis differs in character from that already employed in other cases.

We start with the integral

$$\int_{L_1+L_2} \exp\left[-s(\log x)^{1+k}\right] \frac{dx}{e^{2\pi x\iota}-1},$$

in which s is real and positive, $\log x$ is supposed to have its principal value, and where L_1+L_2 is the contour consisting of the straight lines $+\infty+\iota\beta$ to $1+\alpha+\iota\beta$ to $1+\alpha-\iota\beta$ to $+\infty-\iota\beta$, β being any positive number, and α being any number between 0 and 1.

The integral has the value $S(s)$.

Following the lines of § 1, we obtain

$$\left.\begin{aligned} S(s) &= I_1+I_2+I_3 \\ \text{where} \quad I_1 &= -\int_{L_1} \exp\left[-s(\log x)^{1+k}\right] dx, \\ I_2 &= \int_{L_1} \exp\left[-s(\log x)^{1+k}\right] \frac{dx}{1-e^{-2\pi x\iota}} \\ I_3 &= \int_{L_2} \exp\left[-s(\log x)^{1+k}\right] \frac{dx}{e^{2\pi x\iota}-1} \end{aligned}\right\}. \tag{1}$$

Now

$$I_1 = \int_{1+\alpha}^{\infty} \exp\left[-s(\log x)^{1+k}\right] dx.$$

Putting $s(\log x)^{1+k} = y$, we have

$$\begin{aligned} I_1 &= \int_{s[\log(1+\alpha)]^{1+k}}^{\infty} e^{-y} \exp\left[(y/s)^{1/(1+k)}\right] s^{-1/(1+k)} (1+k)^{-1} y^{-k/(1+k)} dy \\ &= \frac{s^{-1/(1+k)}}{1+k} \int_0^{\infty} e^{-y} \exp\left[(y/s)^{1/(1+k)}\right] y^{-k/(1+k)} dy + \epsilon(\alpha), \end{aligned} \tag{2}$$

since the integral is convergent at $y = 0$.

The contours L_1, L_2 in I_2 and I_3 may be deformed into M_1 and M_2 respectively, where M_1 consists of the straight line from $1+\iota\infty$ to $1+\iota a$, together with the quadrant of the circle $|x-1| = a$, from $1+\iota a$ to $1+a$, and where M_2 is the image of M_1 in the real axis.

We divide I_2 and I_3 into I_2', I_2''; I_3', I_3'', corresponding to the straight and curved parts of their respective contours. Then it is easily seen that

$$I_2'' = \int_{1+a\iota}^{1+a} \exp\left[-s(\log x)^{1+k}\right] \frac{dx}{1-e^{-2\pi x\iota}} = -\tfrac{1}{4}+\epsilon(a),$$

and $$I_3'' = -\tfrac{1}{4}+\epsilon(a),$$

whence $$I_2''+I_3'' = -\tfrac{1}{2}+\epsilon(a). \tag{3}$$

The expression $I_2'+I_3'$ may be transformed as in § 1. Putting $x = 1+te^{\pm\frac{1}{2}\pi\iota}$ on M_1 and M_2 respectively, we obtain

$$I_2'+I_3' = \sum_{n=1}^{\infty} \frac{(-s)^n}{n!} \left[2\mathfrak{R} \int_a^{\infty} \{\log(1+te^{\frac{1}{2}\pi\iota})\}^{(1+k)n} \frac{\iota dt}{e^{2\pi t}-1} \right]$$

$$= \sum_{n=1}^{\infty} \frac{(-s)^n}{n!} \left[2\mathfrak{R} \int_0^{\infty} \{\log(1+te^{\frac{1}{2}\pi\iota})\}^{(1+k)n} \frac{\iota dt}{e^{2\pi t}-1} \right] + \epsilon(a), \tag{4}$$

all the integrals being convergent at the origin.*

From (1), (2), (3), and (4) we now have, when s is real and positive,

$$S(s) = \psi(s)-\tfrac{1}{2}+P(s)+\epsilon(a),$$

and therefore

$$\left.\begin{aligned} S(s) &= \psi(s)-\tfrac{1}{2}+P(s), \\ \text{where}\quad \psi(s) &= \frac{s^{-1/(1+k)}}{1+k} \int_0^{\infty} \exp\left[s^{-1/(1+k)} y^{1/(1+k)}\right] e^{-y} y^{-k/(1+k)} dy \\ P(s) &= \sum_{n=1}^{\infty} \frac{(-s)^n}{n!} \left[2\mathfrak{R} \int_0^{\infty} \{\log(1+te^{\frac{1}{2}\pi\iota})\}^{(1+k)n} \frac{\iota dt}{e^{2\pi t}-1} \right] \end{aligned}\right\}, \tag{5}$$

Now, for the coefficient c_n of s^n in $P(s)$, we have

$$|c_n| < \frac{1}{n!} \int_0^{\infty} (Kt^{\epsilon})^{(1+k)n} \frac{dt}{e^{2\pi t}-1} \quad [\text{since } |\log(1+te^{\frac{1}{2}\pi\iota})| < Kt^{\epsilon}],$$

and, by a slight modification of the proof given in § 5, it may be shown that $P(s)$ is an integral function of order unity.

The expression for $\psi(s)$ defines an analytic function regular at every point except $s = 0$. Then $\psi(s)-\frac{1}{2}+P(s)$, since it agrees in value with the Dirichlet series when s is real and positive, must be the analytic function obtained by continuation from the Dirichlet series.

If we expand the term $\exp\left[s^{-1/(1+k)} y^{1/(1+k)}\right]$ in the expression for $\psi(s)$ in (5), multiply by $(1+k)^{-1} s^{-1/(1+k)} e^{-y} y^{-k/(1+k)}$, and integrate term by term from $y = 0$ to ∞, we obtain

$$\psi(s) = (1+k)^{-1} s^{-1/(1+k)} \sum_{n=0}^{\infty} \frac{s^{-n/(1+k)}}{\Gamma(n+1)} \int_0^{\infty} e^{-y} y^{(n+1)/(1+k)-1} dy$$

$$= (1+k)^{-1} \sum_{n=0}^{\infty} s^{-(n+1)/(1+k)} \frac{\Gamma\{(n+1)/(1+k)\}}{\Gamma(n+1)}. \tag{6}$$

* The legitimacy of this step may be established without difficulty.

Thus $\psi(s)$ is an integral function of the argument $s^{-1/(1+k)}$ of order $(k+1)/k$.

8. It is not difficult to see that the more general Dirichlet series

$$\sum_{n=2}^{\infty} \exp\left[-s\left\{(\log n)^{1+k}+\sum_{\nu=1}^{\mu}\rho_\nu(\log n)^{1+k_\nu}\right\}\right],$$

where $k > k_1 > k_2 > \ldots$, and where the ρ's are any complex numbers, gives rise to an analytic function $S(s)$ whose sole finite singularity is at $s = 0$.

Proceeding as in the last article, we find that, when s is real and positive,

$$S(s) = \psi(s)+P(s), \tag{1}$$

where $P(s)$ is an integral function of order unity, and

$$\psi(s) = \int_1^{\infty} \exp\left[-s\left\{(\log x)^{1+k}+\sum_{1}^{\mu}\rho_\nu(\log x)^{1+k_\nu}\right\}\right]dx.$$

On putting $x = \exp[(y/s)^{1/(1+k)}]$, the last expression becomes

$$\frac{s^{-1/(1+k)}}{1+k}\int_0^{\infty} \exp\left[-\sum_{1}^{\mu}\rho_\nu s^{(k-k_\nu)/(1+k_\nu)}y^{(1+k_\nu)/(1+k)}\right]\exp[s^{-1/(1+k)}y^{1/(1+k)}]e^{-y}y^{-k/(1+k)}dy,$$

which defines an analytic function regular at all points except $s = 0$.

The function $S(s)$, then, is $\psi(s)+P(s)$, which has $s = 0$ for its sole finite singularity.

9. As an example in which a_n is near its lower limit of order in n, let us consider the series

$$\sum_{n=3}^{\infty} \exp[-s \log n \log\log n].$$

Here a_n is the n-th zero of an integral function of zero order, but $|a_n|$ is of less order in n than $\exp[(\log n)^{1+k}]$, the case last considered, for all positive values of k.

We obtain, on the lines previously developed, s being supposed real and positive,

$$\left.\begin{aligned} S(s) &= \int_{e+\alpha}^{\infty} \exp[-s \log x \log\log x]dx+I'+I'', \\ \text{where}\quad I' &= \int_{e+\alpha}^{e+\alpha+\iota\infty} \exp[-s \log x \log\log x]\,\frac{\iota\,dx}{e^{-2\pi x\iota}-1} \\ I'' &= \int_{e+\alpha}^{e+\alpha-\iota\infty} \exp[-s \log x \log\log x]\,\frac{-\iota\,dx}{e^{2\pi x\iota}-1} \end{aligned}\right\}, \tag{1}$$

and where $0 < \alpha < 3-e$.

Then

$$S(s) = \int_1^\infty \exp[-s\log x \log\log x]\,dx$$

$$-\int_1^{e+a} \exp[-s\log x\log\log x]\,dx + I' + I''.$$

Now each of the last three terms defines a function of s, regular at every finite point, and therefore the three terms together define such a function, *i.e.*, an integral function $P(s)$ of s. The order of this function may be shown to be unity.

Again, if we put $\log x = y/s$,

$$\int_1^\infty \exp[-s\log x\log\log x]\,dx = \int_0^\infty \exp[-y(\log y - \log s)]\exp(y/s)\,d(y/s)$$

$$= s^{-1}\int_0^\infty \exp[(\log s + s^{-1})\,y]\,e^{-y\log y}\,dy$$

$$= s^{-1}\sum_{n=0}^{\infty}\frac{(\log s+s^{-1})^n}{\Gamma(n+1)}\int_0^\infty e^{-y\log y}y^n\,dy$$

$$= s^{-1}T(\log s + s^{-1}),$$

where $T(x)$ may be shown to be an integral function of infinite order.*

The analytic function $s^{-1}T(\log s+s^{-1})$ has $s=0$ for its sole finite singularity, and we see that the function $S(s)$ is $P(s)+s^{-1}T(\log s+s^{-1})$ and has $s=0$ for its sole finite singularity.

[It may be shown in a somewhat similar manner that the function $S(s)$, defined by the series $\sum_{n=h}^{\infty}\exp[-s\log n(\log_p n)^k]$, has $s=0$ for its sole finite singularity, where $k>0$, $\log_p n$ stands for $\log[\{\log\ldots\}n]$ (p logarithms), and where h is so large that $\log_p h > 0$.]†

---

* It may be shown that $|T(x)| < \exp\exp[(1+\epsilon)|x|]$, when $|x|$ is sufficiently great. It follows that, for sufficiently *large* values of $|s|$,

$$|s^{-1}T(\log s+s^{-1})| < \exp(|s|^{1+\epsilon}),$$

and therefore

$$|S(s)| < \exp(|s|^{1+\epsilon}).$$

When $|s|$ is *small*, however, we have the inequality,

$$|S(s)| < \exp\exp[(1+\epsilon)|s|^{-1}],$$

when $|s|$ is sufficiently small.

† [Added February 3rd.]

PART II.

Asymptotic Expansions.

1. In the present part it will be shown how our knowledge of the function $S(s)$ enables us, in certain cases, to determine an asymptotic expansion for the corresponding integral function. We must, however, for reasons given in the Abstract, first establish the following general theorem :—

Let $F(z)$ be an analytic function, with a finite number of singularities, and possessing the following properties :—

(1) *In the region R consisting of the whole of the plane on one side of a straight line L, and including the points of L, a branch $F_0(z)$ of $F(z)$ has no singularities, and for all points of R,*

$$|F_0(z)| < K \exp(r^{\rho-1+\epsilon}),$$

where ρ is a positive constant greater than unity, $r = |z|$, and ϵ is any arbitrary positive number.

(2) *In the whole plane, assuming the singularities to be excluded by small circles of radius δ, $|F(z)| < K \exp(r^{\rho+\epsilon})$ for any arbitrary ϵ.*

Let L' be the straight line parallel to L and at a distance l from it on the side of L remote from R, and let R' be the region of the plane on the same side of L' as R.

Let a system of cuts be made so as to prevent the point z, when it is restricted to the region R', from circumscribing any singularity of $F(z)$, so that $F_0(z)$, when continued over R', generates a uniform function.

Then, for any arbitrary ϵ, we shall have for all points of R',

$$|F_0(z)| < K \exp(r^{\rho-1+\epsilon}).$$

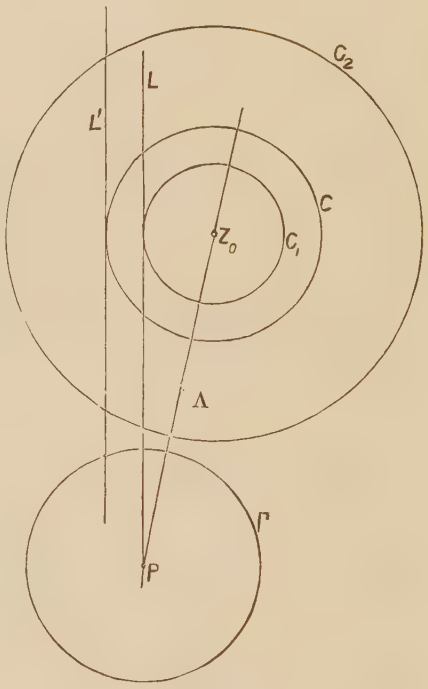

Take any fixed point P of L, and a line Λ passing through P making an angle with L less than $\frac{1}{4}\pi$. Let Γ be a circle with P as centre including all the singularities of $F(z)$.

Let z_0 be a point of Λ lying in R, and such that $|z_0| = r_0$ is large. Let C_1 be the circle with z_0 as centre, touching L, and let $\lambda_1 r_0$ be its radius, so that $\lambda_1 < 1 - K^{-1}$.* Let C_2 be the circle with z_0 as centre, and with radius $\lambda_2 r_0$, where $\lambda_1 < \lambda_2 < 1$. When $|z_0|$ is large, the circle C_2 will be exterior to Γ (since $\lambda_2 < 1$). Let C be the circle with z_0 as centre, touching L'.

Now no point of C_1 is exterior to R. Therefore, for all points of C_1,

$$|F_0(z)| < K \exp(r^{\rho-1+\epsilon}) < K \exp[(1+\lambda_1) r_0]^{\rho-1+\epsilon},$$

or, since ϵ is arbitrary, $|F_0(z)| < K \exp(r_0^{\rho-1+\epsilon})$.

Consequently, if $\sum_{n=0}^{\infty} c_n (z-z_0)^n$ be the expansion of $F_0(z)$ about the point z_0, we have, for points z of C_1,

$$|c_n(z-z_0)^n| < [\text{the maximum modulus of } F_0(z) \text{ on } C_1]$$

$$< K \exp(r_0^{\rho-1+\epsilon}),$$

or
$$|c_n| (\lambda_1 r_0)^n < K \exp(r_0^{\rho-1+\epsilon}), \tag{1}$$

where, what is important to notice, K *is independent of both* n *and* r_0.

Again, C_2 contains no singularity of $F(z)$, and thus lies within the circle of convergence of $\Sigma c_n (z-z_0)^n$. Moreover, we have for points z of C_2,

$$|F_0(z)| < K \exp(r^{\rho+\epsilon}) < K \exp[\{(1+\lambda_2) r_0\}^{\rho+\epsilon}],$$

so that
$$|F_0(z)| < K \exp(r_0^{\rho+\epsilon}).$$

Hence we have

$$|c_n (z-z_0)^n| < K \exp(r_0^{\rho+\epsilon}),$$

or
$$|c_n (\lambda_2 r_0)^n| < K \exp(r_0^{\rho+\epsilon}), \tag{2}$$

where K is independent of both n and r_0.

From (1) and (2) we now deduce the following result

$$|c_n| < K \exp(r_0^{\rho-1+\epsilon})(\lambda_1 r_0 + l + 1)^{-n}, \tag{3}$$

where K is independent of both n and r_0.

---

* That is, when r_0 is large. For the origin is at a fixed distance, independent of r_0, from P.

We have

$$\exp(r_0^{\rho-1+\frac{1}{2}\epsilon})(\lambda_1 r_0)^{-n}/[(\lambda_1 r_0+l+1)^{-n}\exp(r_0^{\rho-1+\epsilon})]$$

$$=\left[\left\{1+\frac{l+1}{\lambda r_0}\right\}^{\lambda r_0}\right]^{n/(\lambda r_0)}\exp[-r_0^{\rho-1+\epsilon}+r_0^{\rho-1+\frac{1}{2}\epsilon}]$$

$$<[e^K]^{n/(\lambda r_0)}\exp[-r_0^{\rho-1+\epsilon}+r_0^{\rho-1+\frac{1}{2}\epsilon}];$$

and therefore, provided $n \leqslant r_0^{\rho+\frac{1}{2}\epsilon}$,

$$<\exp[-r_0^{\rho-1+\epsilon}+Kr_0^{\rho-1+\frac{1}{2}\epsilon}]<K.$$

Therefore, when $n \leqslant r_0^{\rho+\frac{1}{2}\epsilon}$,

$$\exp(r_0^{\rho-1+\frac{1}{2}\epsilon})(\lambda_1 r_0)^{-n}<K(\lambda_1 r_0+l+1)^{-n}\exp(r_0^{\rho-1+\epsilon}). \tag{4}$$

Again,

$$(\lambda_2 r_0)^{-n}\exp(r_0^{\rho+\frac{1}{4}\epsilon})/[(\lambda_1 r_0+l+1)^{-n}\exp(r_0^{\rho-1+\epsilon})]$$

$$<\left[\frac{\lambda_1}{\lambda_2}+\frac{K}{r_0}\right]^n\exp(r_0^{\rho+\frac{1}{4}\epsilon})$$

$$<\exp\left[-n\log\left(\frac{\lambda_2}{\lambda_1}\right)+\frac{Kn}{r_0}+r_0^{\rho+\frac{1}{4}\epsilon}\right].$$

Now, provided $n > r_0^{\rho+\frac{1}{2}\epsilon}$, the term $-n\log(\lambda_2/\lambda_1)$ is of higher order in r_0 than $Kn/r_0+r_0^{\rho+\frac{1}{4}\epsilon}$, and therefore

$$\exp\left[-n\log\left(\frac{\lambda_2}{\lambda_1}\right)+\frac{Kn}{r_0}+r_0^{\rho+\frac{1}{4}\epsilon}\right]<K.$$

We have then, when $n > r_0^{\rho+\frac{1}{2}\epsilon}$,

$$(\lambda_2 r_0)^{-n}\exp(r_0^{\rho+\frac{1}{4}\epsilon})<K(\lambda_1 r_0+l+1)^{-n}\exp(r_0^{\rho-1+\epsilon}). \tag{5}$$

If now, in (1), we replace ϵ by $\frac{1}{2}\epsilon$, and compare with (4), we see that the inequality (3) holds when $n \leqslant r_0^{\rho+\frac{1}{2}\epsilon}$.

Again, replacing ϵ by $\frac{1}{4}\epsilon$ in (2), and comparing with (5), we see that (3) holds when $n > r_0^{\rho+\frac{1}{2}\epsilon}$.

The inequality (3) holds, then, in any case.

It is now easy to deduce our theorem.

For all points z upon or within the circle C, or $|z-z_0|=\lambda_1 r_0+l$, we have

$$|F_0(z)| \leqslant \sum_0^\infty |c_n|\,|z-z_0|^n$$

$$\leqslant \sum_0^\infty |c_n|(\lambda_1 r_0+l)^n$$

$$<K\exp(r_0^{\rho-1+\epsilon})\sum_0^\infty\left(\frac{\lambda_1 r_0+l}{\lambda_1 r_0+l+1}\right)^n$$

$$<K\exp(r_0^{\rho-1+\epsilon})(\lambda_1 r_0+l+1).$$

Now $$r > \left(1 - \frac{\lambda_1 r_0 + l}{r_0}\right) r_0 > \left(1 - \lambda_1 - \frac{l}{r_0}\right) r_0.$$

Therefore, since $\lambda_1 < 1$,

$$\exp(r_0^{\rho-1+\epsilon})(\lambda_1 r_0 + l + 1) < K \exp(r^{\rho-1+2\epsilon}),$$

and $$|F_0(z)| < K \exp(r^{\rho-1+2\epsilon}).$$

Since ϵ is arbitrary, we have, then,

$$|F_0(z)| < K \exp(r^{\rho-1+\epsilon}). \tag{6}$$

This last inequality, then, holds for all points z which can be internal to a circle C.

Again, if we take a line Λ' through P, the image of Λ in L, the inequality (6) will hold for all points which can be internal to a circle C', which has its centre at a sufficiently remote point of Λ' lying in R, and which touches L'.

Now every point of the strip between L and L', which is exterior to some circle Γ_1 with its centre at P, can be interior to a circle C or C'; and therefore (6) holds for all points of the strip exterior to Γ_1.

But for all points of Γ_1, when the singularities of $F(z)$ are excluded by small circles, the inequality (6) obviously holds, and it holds, by hypothesis, within the region R. It must therefore hold within the region R'.

2. When, from our knowledge of the function $S(s)$, we attempt to determine an asymptotic expansion for $\log F(z)$, the problem is greatly simplified if $S(s)$ is known to be a uniform function of s, for in this event we can employ the ordinary theory of residues, which is inapplicable when $S(s)$ is multiform.

Now, if we refer to the various cases of Dirichlet series, considered in Part I., it will be seen that the only case in which $S(s)$ is found to be a uniform function occurs when $a_n = \exp(n^{1/k})$, where k is an integer.

We shall, then, first consider this case. The following result will be established.

Let k be an integer not less than 3, and let $S(s)$ be the function derived from the series $\sum_{n=1}^{\infty} \exp(-sn^{1/k})$.

Let $F(z) = \prod_{n=1}^{\infty} [1 + z/\exp(\rho n^{1/k})]$, *where* $\Re\rho > 0$.

Then, if δ be a positive number as small as we please, and if z be exterior to the region between the spirals defined by

$$z = -\exp(\rho x \pm \delta\iota),$$

where x takes all real values from $-\infty$ to ∞, we have the asymptotic expansion,

$$\log F(z) = \frac{(\log z)^{k+1}}{(k+1)\rho^k} + \frac{2}{(k+1)\rho^k} \sum_{n=1}^{\kappa} {}_{k+1}C_{2n}(2^{2n-1}-1)\pi^{2n} B_{2n} (\log z)^{k+1-2n}$$

$$-\tfrac{1}{2}\log z - \rho\zeta(-1/k) + \sum_{m=1}^{N} (-)^{m-1} \frac{S(-\rho m)}{m} z^{-m} + J_N,$$

where $\kappa = \frac{1}{2}k$ or $\frac{1}{2}(k+1)$ according as k is even or odd, the B's are Bernoulli's numbers, and

$$\lim_{|z|\to\infty} |J_N z^N| = 0.$$

It is clear that no asymptotic expansion can be valid over the whole extent of any region containing zeros of $F(z)$.

Now the zeros, which are of the form $-\exp(\rho n^{1/k})$, lie on the equiangular spiral $z = -\exp(\rho x)$, where x takes all real values. Thus the two spirals $z = -\exp(\rho x \pm \delta\iota)$ [$x = -\infty$ to ∞], include between them all the zeros of $F(z)$.

In the remaining part R of the plane $\log z$ is an uniform function, for z cannot describe a path in R, starting from and returning to the same point, and circumscribing the origin. We fix the determination of $\log z$ by saying that $\log z$ is to be zero at $z = 1$, and we then interpret z^λ to mean $\exp(\lambda \log z)$.

Let us determine the limits of the argument of z for a given modulus r, when z is restricted to the region R.

Let $z = -\exp(\rho x')$ be the point of the circle $|z| = r$ for which x is real. Then the circle meets the bounding spirals in the points $-\exp(\rho x' \pm \delta\iota)$. The determination of $\log z$ at $-\exp(\rho x' + \delta\iota)$ may be found by making z describe a path in R from the point $z = 1$ to some point of the spiral $z = -\exp(\rho x + \delta\iota)$, and then making z follow this spiral up to the point in question.

We thus obtain $\log z = \pi\iota + \rho x' + \delta\iota$.

Similarly, by making z describe a path in R from $z = 1$ to a point of the spiral $z = \exp(\rho x - \delta\iota)$, we obtain for the point $\exp(\rho x' - \delta\iota)$,

$$\log z = \pi\iota + \rho x' - \delta\iota.$$

It is therefore seen that for any point z of R we must have

$$\log z = \rho x + \phi\iota,$$

where x is real, and where $|\phi| < \pi - \delta$.

We now show that, if $|\Re\rho s| < K$, and if z be any point of R, and if the points $0, \pm 1, \pm 2, \ldots$ be excluded by small circles from the range of s,

$$\left|\frac{z^s}{\sin \pi s}\right| < K \exp[-|s|/K], \tag{1}$$

where K is independent of s, though not of z.

Let $\rho s = \beta + t\iota$, so that $|\beta| < K$. Then

$$|z^s| = |\exp[s(\rho x + \iota\phi)]|.$$

$$\leqslant \exp[\beta x + |\Re(s\phi\iota)|].$$

We have also $$|\sin \pi s| > K^{-1} \exp|\Re\pi s\iota|.$$

Therefore, since $|\phi| < \pi - \delta$,

$$\left|\frac{z^s}{\sin \pi s}\right| < K \exp(-|s|/K).$$

Now suppose that z is less than unity. We then have

$$\log F(z) = \sum_{n=1}^{\infty} \log[1 + z/\exp(\rho n^{1/k})]$$

$$= \sum_{n=1}^{\infty} \sum_{t=1}^{\infty} (-)^{t-1} \frac{z^t}{t \exp(t\rho n^{1/k})};$$

and therefore, since this double series is a uniformly convergent series of functions, each of which is expansible in a uniformly convergent power series,

$$= \sum_{t=1}^{\infty} (-)^{t-1} \frac{z^t}{t} \left[\sum_{n=1}^{\infty} \exp(-t\rho n^{1/k})\right]$$

$$= -\sum_{t=1}^{\infty} (-)^t \frac{S(\rho t)}{t} z^t. \tag{2}$$

This series must converge when $|z| < 1$.

Now consider the integral

$$-\frac{1}{2\iota} \int_{L_1 + L_2} S(\rho s) \frac{z^s\, ds}{s \sin \pi s},$$

where $L_1 + L_2$ is the contour $+\infty + \iota\beta$ to $\alpha + \iota\beta$ to $\alpha - \iota\beta$ to $+\infty - \iota\beta$, where β is positive, and $0 < \alpha < 1$. The integrand is a uniform function of s inside the contour; also the integral is convergent at infinity, since $|z| < 1$, and since $S(\rho s)$ is finite on the contour. The singu-

larities of the integrand are the points 1, 2, 3, ..., and the sum of the residues of the integrand at these points is

$$-\frac{1}{2\pi\iota}\sum_{t=1}^{\infty}(-)^t\frac{z^t}{t}S(\rho t).$$

This series is convergent and has the sum $\frac{1}{2\pi\iota}\log F(z)$. Hence, when $z<1$,

$$\log F(z)=-\frac{1}{2\iota}\int_{L_1+L_2}S(\rho s)\frac{z^s\,ds}{s\sin\pi s}. \tag{3}$$

Let M be the line $\Re\rho s=$ constant passing through the point a, and let N_1, N_2 be the parts of the circle $|s|=R$ intercepted between M and L_1, L_2 respectively. Then on N_1 and N_2, $\Re\rho s\geqslant\Re\rho a>1/K$, and therefore

$$|S(\rho s)|<K.$$

Now, if z be a point within the unit circle which is also a point of the region R, we have, as we have seen above,

$$\left|\frac{z^s}{\sin\pi s}\right|<K\exp[\beta x+|\Re(s\phi\iota)|]/[\exp|\pi\Re(s\iota)|],$$

where $$\beta=\Re s\rho \quad\text{and}\quad z=\exp(\rho x+\phi\iota).$$

Now $\beta>0$, and since $\Re\rho>0$ and $|z|<1$, we have $x<0$; therefore

$$\left|\frac{z^s}{\sin\pi s}\right|<K\exp[|\Re\{s(\pi-\delta)\iota\}|]/\exp[|\Re(\pi s\iota)|]$$

$$<K\exp[-\delta|\Re(s\iota)|].$$

On putting $s=Re^{\iota\theta}$, we therefore have

$$\left|\int_{N_1}S(\rho s)\frac{z^s\,ds}{s\sin\pi s}\right|+\left|\int_{N}S(\rho s)\frac{z^s\,ds}{s\sin\pi s}\right|<2\int_0^{\pi}K\exp(-\delta R\sin\theta)\,d\theta,$$

which tends to zero as R tends to infinity.*

It follows from this last result that we may deform the contour L_1+L_2 of equation (3) into M, since we pass over no singularities of the integrand,

---

* For it is less than

$$K\int_0^{\frac{1}{2}\pi}\exp(-\delta R\sin\theta)\,d\theta<K\int_0^{\frac{1}{2}\pi}\exp\left(-\frac{\delta R\theta.2}{\pi}\right)d\theta<K\int_0^{\infty}\exp(-\phi)\frac{\pi d\phi}{2\delta R}.$$

and we have, when z is a point of R within the unit circle,

$$\log F(z) = -\frac{1}{2\iota}\int_M S(\rho s)\,\frac{z^s ds}{s \sin \pi s}. \tag{4}$$

We shall now show that this equation holds when z is any point of the region R. For any such z, we have, for all points s of the contour M,

$$|s^{-1}S(\rho s)| < K,$$

since
$$\mathfrak{R}\rho s = \mathfrak{R}\rho a > 0;$$

and, by the result (1),

$$\left|\frac{z^s}{\sin \pi s}\right| < K \exp(-|s|/K).$$

It follows immediately that the integral in (4) is convergent. It can also be shown without difficulty that the integral is differentiable with respect to z, and therefore that it defines an analytic function of z in the region R. This function agrees in value with $\log F(z)$ in the part of R within the unit circle; it must therefore represent $\log F(z)$ over the whole region R.

Let M' be the line $\mathfrak{R}\rho s = \text{constant}$ passing through the point $-(l+1)+a$. Now, when $\mathfrak{R}y > a$,

$$|S(y)| < K < K \exp(|y|^{1/(k-1)+\epsilon}).$$

Also, if $y = 0$ be excluded by a small circle from the range of y, we have for all values of y,
$$|S(y)| < K \exp[|y|^{k/(k-1)+\epsilon}],$$

since, by the results of I., § 4, $S(y)$ is the sum of $\Gamma(k+1)\,y^{-k}$, and an integral function of y of order $k/(k-1)$. It therefore follows, by the theorem of II., § 1, that when

$$\mathfrak{R}y \geqslant -(l+1)+a,$$

we have
$$|S(y)| < K \exp(|y|^{1/(k-1)+\epsilon}).$$

Hence, within and upon the boundaries of the strip of the s-plane between M and M', the origin being excluded by a small circle, we have

$$|S(\rho s)| < K \exp(|\rho s|^{1/(k-1)+\epsilon}).$$

Now, for all points of the strip, we have, by (1),

$$\left|\frac{z^s}{s \sin \pi s}\right| < K \exp(-|s|/K).$$

Since $k \geqslant 3$, we have $1/(k-1) < 1$, and we can choose ϵ so that $1/(k-1)+\epsilon < 1$. Then, within the strip,

$$\left| S(\rho s) \frac{z^s}{s \sin \pi s} \right| < K \exp\left[-|s|/K + K|\rho s|^{1/(k-1)+\epsilon}\right]$$

$$< K \exp\left[-|s|/K\right].$$

It follows immediately that $\int S(\rho s) \frac{z^s ds}{s \sin \pi s}$, taken along M', is convergent, and further, that the same integral taken along a straight line connecting M and M' tends to zero as the position of line tends to infinity. We have then

$$-\frac{1}{2\iota}\int_M S(\rho s) \frac{z^s ds}{s \sin \pi s} + \frac{1}{2\iota}\int_{M'} S(\rho s) \frac{z^s ds}{s \sin \pi s}$$

$$= -2\pi\iota\Big[\text{the sum of the residues of } -\frac{1}{2\iota} S(\rho s) \frac{z^s}{s \sin \pi s} \text{ at the singularities between } M \text{ and } M'\Big]. \quad (5)$$

The singularities are at the points $0, -1, -2, \ldots, -l$. The residue of $-\frac{1}{2\iota} \frac{z^s S(\rho s)}{s \sin \pi s}$ at $s = -m$ $(m \neq 0)$, is

$$-\frac{1}{2\pi\iota}(-)^{m-1} \frac{S(-\rho m)}{m} z^{-m}. \quad (6)$$

Now consider the residue at $s = 0$. Near this point we have, using the form of $S(\rho s)$ given in § 4, Part I.,

$$-\frac{1}{2\iota} \frac{z^s S(\rho s)}{s \sin \pi s} = -\frac{1}{2\iota\pi} \Gamma(k+1) \rho^{-k} s^{-k-2} \frac{z^s \pi s}{\sin \pi s} - \frac{1}{2\pi\iota} \frac{\pi z^s}{s \sin \pi s} (-\tfrac{1}{2})$$

$$-\frac{1}{2\iota} \frac{z^s}{s \sin \pi s}[-\rho s \xi(-1/k) + A s^2 + \ldots].$$

The residues of the second and third terms give

$$-\frac{1}{2\pi\iota}(-\tfrac{1}{2} \log z) + \frac{\rho}{2\pi\iota} \xi(-1/k). \quad (7)$$

As regards the first term, we have, when $|s|$ is small,

$$\frac{\pi s}{\sin \pi s} = 1 + \sum_{n=1}^{\infty} A_{2n} s^n,$$

where $$A_{2n} = \frac{2(2^{2n-1}-1)\,\pi^{2n}}{2n!} B_{2n}.$$

Hence the residue of the first term

$$= -\frac{1}{2\pi\iota} \rho^{-k} \Gamma(k+1) \left\{ \frac{(\log z)^{k+1}}{(k+1)!} + \sum_{n=1}^{\kappa} A_{2n} \frac{(\log z)^{k+1-2n}}{(k+1-2n)!} \right\}, \qquad (8)$$

where κ is $\frac{1}{2}k$ or $\frac{1}{2}(k+1)$, according as k is even or odd.

We now have from (4), (5), (6), (7), and (8),

$$\log F(z) = -\frac{1}{2\iota} \int_M S(\rho s) \frac{z^s\, ds}{s \sin \pi s}$$

$$= T - \frac{1}{2\iota} \int_{M'} S(\rho s) \frac{z^s\, ds}{s \sin \pi s},$$

where T is the expansion given at the beginning of the article, with N replaced by l, and with the term J_N omitted.

In order to establish our result, we have now only to show that

$$\lim_{|z| \to \infty} \left| z^l \int_{M'} S(\rho s) \frac{z^s\, ds}{s \sin \pi s} \right| = 0.$$

Let $$z = \exp(\rho x + \iota\phi), \qquad \rho s = \rho(-l-1+\alpha) + \iota t,$$

where x is real, and where t is real when s is a point of M'.

Then $$\lim_{|z| \to \infty} \left| \int_{M'} z^{l+s} S(\rho s) \frac{ds}{s \sin \pi s} \right|$$

$$\leqslant \lim_{|z| \to \infty} \int_{-\infty}^{\infty} |\exp[(\rho x + \iota\phi)(-1+\alpha+\iota t/\rho)]| \exp[K|t|^{1/(k-1)+\epsilon}] \frac{K\, dt}{\exp|\Re(\pi\iota s)|}$$

$$\leqslant \lim_{|z| \to \infty} K \int_{-\infty}^{\infty} |z|^{-1+\alpha} \exp[|\Re(\phi\iota s)|] \exp[K|t|^{1/(k-1)+\epsilon}] \exp[-\pi|\Re(\iota s)|]\, dt \qquad (9)$$

$$\leqslant \lim_{|z| \to \infty} K|z|^{-1+\alpha} \int_{-\infty}^{\infty} \exp[K|t|^{1/(k-1)+\epsilon}] \exp[-\delta|\Re(s\iota)|]\, dt,$$

since $|\phi| < \pi - \delta$.

Now the integral last written is convergent, and it is independent of z. Also, since $\alpha < 1$,

$$\lim_{|z|\to\infty} |z|^{-1+\alpha} = 0.$$

We therefore have

$$\lim_{|z|\to\infty} \left| \int_{M'} z^{l+s} S(\rho s) \frac{ds}{s \sin \pi s} \right| = 0.$$

3. In the last article we excluded a spiral strip of the z-plane, containing the zeros of $F(z)$, from the range of the variable z. (In the particular case when ρ is real, the strip becomes the angle of the plane between two lines making an arbitrarily small angle δ with the negative real axis.) The spiral region is, as a matter of fact, unnecessarily extensive, and we shall show that the expansion of the last article is valid when the excluded region is contracted upon the curve of zeros. The expansion, in fact, is valid when the excluded region has for its boundaries (outside the unit circle) the curves defined by

$$z = \exp[\rho x \pm \delta\iota . x^{-(k-2)+\delta}],$$

where x takes all values from 1 to $+\infty$ and where δ is an arbitrarily small positive number. These curves start at the points $z = \exp(\rho \pm \delta\iota)$; the boundaries of the region from 0 to these points may be taken to be the spirals $z = \exp(\rho x \pm \delta\iota)$.*

If z be any point exterior to this region, $|z|$ being supposed greater than unity, we have

$$z = \exp(\rho x + \iota\phi),$$

where $$\pi - |\phi| > \delta x^{-(k-2)+\delta} > K^{-1}(\log r)^{-(k-2)+\delta}.$$

Since $\pi - |\phi|$ is greater than a positive number independent of s, we have, as in the last article,

$$\log F(z) = T - \frac{1}{2\iota} \int_{M'} S(\rho s) \frac{z^s\, ds}{s \sin \pi s},$$

and we have only to prove that

$$\lim_{r\to\infty} \left| z^l \int_{M'} S(\rho s) \frac{z_s\, ds}{s \sin \pi s} \right| = 0.$$

* The strip between these spirals contains no zeros of $F(z)$, but it must be excluded from the range of z in order to secure the proper determination of $\log z$, which is supposed zero at $z = 1$.

Now we still have the result (9) of the last article, viz.,

$$\lim_{r\to\infty} \left| \int_{M'} z^{l+s} S(\rho s) \frac{ds}{s \sin \pi s} \right|$$

$$\leqslant \lim_{r\to\infty} Kr^{-1+\alpha} \int_{-\infty}^{\infty} \exp\left[|\Re \phi \iota s|\right] \exp\left[K|t|^{1/(k-1)+\epsilon}\right] \exp\left[-|\Re \pi \iota s|\right] dt$$

$$\leqslant \lim_{r\to\infty} Kr^{-1+\alpha} \int_{-\infty}^{\infty} \exp\left[K|t|^{1/(k-1)+\epsilon}\right] \exp\left[-K^{-1}(\log r)^{-(k+2)+\delta}|\Re \iota s|\right] dt,$$

since $$\pi - |\phi| > K^{-1}(\log r)^{-(k-2)+\delta}.$$

Now, when $|t| > K_1$, $|\Re \iota s| > K^{-1}|t|$. Also the integral last written, when taken between the limits $t = \pm K_1$, is less than a K independent of z, and this K when multiplied by $r^{-1+\alpha}$ has zero as a limit when r is made infinite. We therefore have

$$\lim_{r\to\infty} \left| \int_{M'} z^{l+s} S(\rho s) \frac{ds}{s \sin \pi s} \right|$$

$$\leqslant \lim_{r\to\infty} Kr^{-1+\alpha} \int_{-\infty}^{\infty} \exp\left[K_2|t|^{1/(k-1)+\epsilon}\right] \exp\left[-K_3^{-1}(\log r)^{-(k-2)+\delta}|t|\right] dt$$

$$\leqslant \lim_{r\to\infty} \left[Kr^{-1+\alpha} \sum_{n=0}^{\infty} \frac{K_2^n}{n!} \int_{-\infty}^{\infty} |t|^{n[1/(k-1)+\epsilon]} \exp\left[-K_3^{-1}(\log r)^{-(k-2)+\delta}|t|\right] dt \right]$$

$$\leqslant \lim_{r\to\infty} \left[Kr^{-1+\alpha} \sum_{n=0}^{\infty} \frac{2\left[K_2 K_3 (\log r)^{k-2-\delta}\right]^n}{\Gamma(n+1)} \Gamma\left\{n\left(1/\overline{k-1}+\epsilon\right)\right\} \right].$$

The infinite series is an integral function of the argument

$$K_2 K_3 (\log r)^{k-2-\delta}$$

of order $$1/[1-(1/\overline{k-1}+\epsilon)].$$

Therefore

$$\lim_{r\to\infty} \left| \int_{M'} z^{l+s} S(\rho s) \frac{ds}{s \sin \pi s} \right|$$

$$\leqslant \lim_{r\to\infty} Kr^{-1+\alpha} \exp\left[K\left\{K_2 K_3 (\log r)^{k-2-\delta}\right\}^{1/[1-(1/\overline{k-1}+\epsilon)]+\epsilon'}\right]. \quad (2)$$

Now ϵ and ϵ' may be so chosen that

$$(k-2-\delta)\left[1/\left\{1-(1/\overline{k-1}+\epsilon)\right\}+\epsilon'\right] < 1-1/K \quad (\text{since } k > 2).$$

Then the right-hand side of (2) is less than or equal to

$$\lim_{r\to\infty} Kr^{-1+a}\exp\left[K(\log r)^{1-1/K}\right] = 0,$$

and the desired result is established.*

4. If k is not an integer $S(\rho s)$ is no longer a uniform function, and the ordinary theory of residues cannot be applied. We shall now consider this case, and shall investigate the more general form

$$F(z) = \prod_{n=1}^{\infty}\left[1+z/\exp\left\{\rho\left(n^{1/k}+\sum_{\nu=1}^{\mu}\rho_\nu n^{1/k_\nu}\right)\right\}\right],$$

where $k_\mu > k_{\mu-1} > \ldots > k_1 > k > 2$, ρ_1, ρ_2, ... are real, and where we suppose, for simplicity, that ρ is real and, of course, positive.

We obtain the following result:—

If the angle of the z-plane contained between the two straight lines which make an arbitrarily small angle δ with the negative real axis be excluded from the range of the variable z, we have the asymptotic expansion

$$\log F(z) = -\rho\left[\zeta(-1/k)+\sum_{\nu=1}^{\mu}\rho_\nu\zeta(-1/k_\nu)\right]$$

$$-\tfrac{1}{2}\log z+\sum_{n=0}\frac{\rho c_n\sin(k-\theta_n)\pi}{\pi}\left(\frac{\log z}{\rho}\right)^{k-\theta_n+1}$$

$$\times\left[\Gamma(\theta_n-k-1)+2\sum_{m=1}\Gamma(2m+\theta_n-k-1)\frac{(2^{2m-1}-1)\pi^{2m}}{2m!}B_{2m}(\log z)^{-2m}\right],$$

where the B's are Bernoulli's numbers and $s^{-k}\sum_{n=0}^{\infty}c_n s^{\theta_n}$ is the expansion for $\psi(s)$ given in I., § 5. *The infinite series is to be arranged in order of increasing indices of $1/\log z$, and when we stop at any term, of order $(\log z)^{-p}$ say, we have $\lim_{|z|\to\infty}|R(\log z)^p| = 0$, where R is the remainder.*

Let R denote the region of the s-plane defined by $\Re s \geqslant -l$ (where l is any positive number), with the origin excluded by a small circle, and with a cut made along the negative real axis from this circle to the boundary $\Re s = -l$.

* The regions over which most other known asymptotic expansions, *e.g.*, that of Barnes's function $P_\nu(z)$, are valid, may be extended in the same way.

As in I., § 5, let $S_0(\rho s)$ denote the function, uniform in R, which is derived by continuation over R from the Dirichlet series

$$\sum_{n=1}^{\infty} \exp\left[-\rho s\left\{n^{1/k}+\sum_{1}^{\mu}\rho_\nu n^{1/k_\nu}\right\}\right]$$

defined for $\Re s > 0$. We have, by I., § 5, for all points s, and for all branches of $S(\rho s)$,

$$S(\rho s) = \psi(\rho s)+Q(\rho s), \tag{1}$$

where $Q(x)$ is an integral function of x of order $k/(k-1)$,

$$\left.\begin{aligned} &\text{and} && \psi(\rho s) = (\rho s)^{-k}\left[\Gamma(k+1)+\sum_{n=1}^{\infty} c_n(\rho s)^{\theta_n}\right] \\ &\text{where} && \theta_n > K^{-1}n^{1/(\mu+1)} \\ & && |c_n| < [K_1/\theta_n]^{\theta_n} \end{aligned}\right\}. \tag{2}$$

We shall show that for all points of R we have

$$\left.\begin{aligned} |\psi_0(\rho s)| &< K\exp[|s|^{\epsilon}] \\ |Q(\rho s)| &< K\exp[|s|^{1/(k-1)+\epsilon}] \end{aligned}\right\}. \tag{3}$$

From (2) we have, for all values of s exterior to the small circle excluding the origin,

$$|\psi(\rho s)| < K+K\sum_{n=1}^{\infty}[K_1\rho|s|/\theta_n]^{\theta_n}. \tag{4}$$

Let m be the *greatest* value of n such that

$$K_1\rho|s|/\theta_n > e^{-1}.$$

Now $[K_1\rho|s|/\theta]^{\theta}$ has its maximum value for $\theta > 0$ when $\theta = K_1\rho|s|/e$, and the value then is $\exp[K_1\rho|s|/e]$. Hence, from (4),

$$\begin{aligned} |\psi(\rho s)| &< K(m+1)\exp[K_1\rho|s|/e]+\sum_{n=m+1}^{\infty}[K_1\rho|s|/\theta_n]^{\theta_n} \\ &< [K\theta_m]^{\mu+1}\exp[K|s|]+\sum_{n=1}^{\infty}[e^{-1}]^{\theta_n} \\ &< K|s|^{\mu+1}\exp[K|s|]+\sum_{n=1}^{\infty}\exp[-K^{-1}n^{1/(\mu+1)}] \\ &< K\exp[|s|^{1+\epsilon}],* \end{aligned} \tag{5}$$

since the infinite series is convergent and independent of $|s|$.

---

* For the method of determining inequalities such as the above by finding the maximum term of the series, see Borel, *Leçons sur les séries à termes positifs*, p. 69.

Now let R' be the region defined by $\mathfrak{R}s > 1$. When s is real and $s > 1$, we have by § 5, Part I.,

$$\psi_0(\rho s) = \int_0^\infty \exp\left[-\rho s\left\{x^{1/k} + \sum_{\nu=1}^{\mu} \rho_\nu x^{1/k_\nu}\right\}\right] dx.$$

Now the right-hand side defines an analytic function of s, uniform in the region R'. This function, then, must be $\psi_0(\rho s)$. Hence, within R',

$$|\psi_0(\rho s)| \leqslant \int_0^\infty \exp\left[-\mathfrak{R}(\rho s)\left|\left\{x^{1/k} + \Sigma \rho_\nu x^{1/k_\nu}\right\}\right|\right] dx$$

$$< K \quad (\text{since } \mathfrak{R}\rho s \geqslant \rho). \tag{5}'$$

Again, since $Q(s)$ is an integral function of order $k/(k-1)$, we have, for all values of s,

$$|Q(\rho s)| < K \exp\left[|s|^{k/(k-1)+\epsilon}\right]. \tag{6}$$

Also, within R', we have

$$|S_0(\rho s)| \leqslant \sum_{n=1}^{\infty} \exp\left[-\mathfrak{R}(\rho s)\left|\left\{n^{1/k} + \Sigma \rho_\nu n^{1/k_\nu}\right\}\right|\right]$$

$$< K \quad (\text{since } \mathfrak{R}\rho s \geqslant \rho),$$

and therefore

$$|Q(\rho s)| \leqslant |S_0(\rho s)| + |\psi_0(\rho s)|$$

$$< K. \tag{6}'$$

Now we see, from (5) and (5)', that we may apply the theorem of II., § 1, in the case of the function $\psi_0(\rho s)$, and we therefore have, for all points of R,

$$|\psi_0(\rho s)| < K \exp\left[|s|^{\epsilon}\right].$$

Similarly, by (6) and (6)', we may apply the same theorem in the case of $Q(\rho s)$, and we have, within R,

$$|Q(\rho s)| < K \exp\left[|s|^{k/(k-1)-1+\epsilon}\right].$$

These are the desired results (3).

Now suppose that $|\arg z| < \pi - \delta$, so that z is exterior to the angle of our theorem. Then proceeding exactly as in § 2, we obtain

$$\log F(z) = -\frac{1}{2\iota} \int_{M,\, \frac{1}{2}\pi} S_0(\rho s)\, \frac{z^s\, ds}{s \sin \pi s},$$

where M is the line $\Re s = 1-\alpha$ and $0 < \alpha < 1$,

$$\left.\begin{aligned} &= I_1+I_2, \\ \text{where} \quad & I_1 = -\frac{1}{2\iota}\int_{M,\,\frac{1}{2}\pi} \psi_0(\rho s)\,\frac{z^s\,ds}{s\sin\pi s} \\ \text{and} \quad & I_2 = -\frac{1}{2\iota}\int_{M} Q(\rho s)\,\frac{z^s\,ds}{s\sin\pi s} \end{aligned}\right\}. \tag{7}$$

Let M' be the line $\Re s = -1+\alpha$. For all points s within or upon the boundaries of the strip between M and M', and outside a small circle excluding the origin, we have

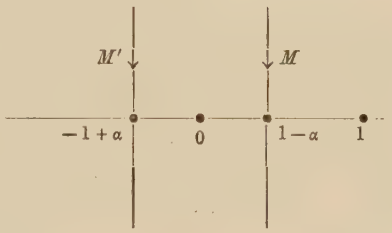

$$\left| Q(\rho s)\,\frac{z^s}{s\sin\pi s}\right| < K\exp\left[|s|^{1/(k-1)+\epsilon}\right]\exp\left[-|s|/K\right],$$

and therefore, since ϵ may be chosen so that $1/(k-1)+\epsilon < 1$,

$$-\frac{1}{2\iota}\left(\int_M - \int_{M'}\right)\left(Q(\rho s)\,\frac{z^s\,ds}{s\sin\pi s}\right)$$

exists, and, since the integrand is uniform, is equal to

$$-2\pi\iota\left[\text{the sum of the residues of } -\frac{1}{2\iota}\,Q(\rho s)\,\frac{z^s}{s\sin\pi s}\right.$$
$$\left.\text{at the singularities between } M \text{ and } M'\right].$$

Now the only singularity within the strip is at $s=0$; also we have by I., § 5,

$$Q(\rho s) = -\tfrac{1}{2}-\rho\left[\xi(-1/k)+\Sigma\rho_\nu\xi(-1/k_\nu)\right]s+As^2+\dots.$$

Then we have

$$-\frac{1}{2\iota}\left(\int_M - \int_{M'}\right)\left(Q(\rho s)\,\frac{z^s\,ds}{s\sin\pi s}\right)$$
$$= -\tfrac{1}{2}\log z-\rho\left[\xi(-1/k)+\Sigma\rho_\nu\xi(-1/k_\nu)\right].$$

and
$$I_2 = -\tfrac{1}{2}\log z-\rho\left[\xi(-1/k)+\Sigma\rho_\nu\xi(-1/k_\nu)\right]+J, \tag{8}$$

where
$$J = -\frac{1}{2\iota}\int_M Q(\rho s)\,\frac{z^s\,ds}{s\sin\pi s}.$$

It may be shown, on the lines of § 3, that

$$\lim_{|z|\to\infty} |Jz^{-1+\alpha+\epsilon}| = 0,$$

and therefore that, for any value of N_1,

$$\lim_{|z|\to\infty} |J(\log z)^{N_1}| = 0. \tag{8}'$$

We have now to consider I_1.

Let $1-\beta$ be a positive number less than $1-\alpha$. Let M_1, M_2 be the straight lines from $-1+\beta+\infty\iota$ to $-1+\beta$ and $-1+\beta$ to $-1+\beta-\infty\iota$ respectively, and let T_0 be the circle $|s| = 1-\beta$, starting from $-1+\beta$ and described clockwise. Now upon and within the contours consisting of M_1, T_0, M_2, and M, we have

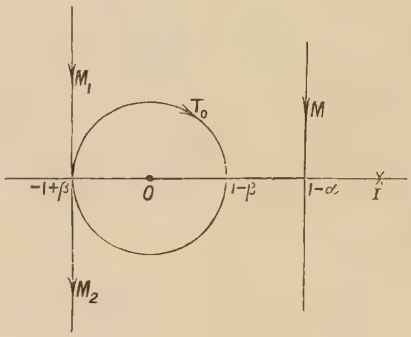

$$|\psi_0(\rho s)| < K \exp[|s|^{\epsilon}],$$

and

$$\left|\frac{z^s}{s \sin \pi s}\right| < K \exp[-|s|/K].$$

It follows that the integral

$$\int_{M+(-M_2)+(-T_0)+(-M_1)} \psi_0(\rho s) \frac{z^s\,ds}{s \sin \pi s}$$

exists.*

Since the integrand has no singularities in the region between M and $M_1+T_0+M_2$, and since the contour of integration may be considered closed by two lines crossing from M to M_2 and from M_1 to M, the integrals along which lines tend to zero as the lines are taken more and more distant from the origin, the above integral must have the value zero. Hence

$$\begin{aligned} I_1 &= -\frac{1}{2\iota}\int_{M,\,\frac{1}{2}\pi} \psi_0(\rho s) \frac{z^s\,ds}{s \sin \pi s} \\ &= -\frac{1}{2\iota}\int_{T_0,\,\pi} \psi_0(\rho s) \frac{z^s\,ds}{s \sin \pi s} - \frac{1}{2\iota}\int_{M_1,\,\frac{1}{2}\pi} \psi_0(\rho s) \frac{z^s\,ds}{s \sin \pi s} \\ &\qquad - \frac{1}{2\iota}\int_{M_2,\,-\pi} \psi_0(\rho s) \frac{z^s\,ds}{s \sin \pi s}. \end{aligned}$$

* I use $-L$ to denote the contour L described in the reverse direction.

Now upon M_1 and M_2, if $s = -(1-\beta)+\tau\iota$,

$$|\psi_0(\rho s)/s| < K \exp[|s|^\epsilon] < K \exp[|\tau|^\epsilon],$$

$$\left|\frac{z^s}{\sin \pi s}\right| < \frac{K|r^s e^{s\iota\theta}|}{\exp[-\pi|\tau|]/K} \quad (z = re^{\iota\theta},\ |\theta| < \pi-\delta)$$

$$< Kr^{-1+\beta} \exp[-\delta|\tau|],$$

where all the K's are independent of z as well as of s. Therefore

$$\left| -\frac{1}{2\iota}\int_{M_1} \psi_0(\rho s)\frac{z^s ds}{s \sin \pi s}\right| < Kr^{-1+\beta}\int_{-\infty}^{\infty} e^{-\delta|\tau|+\kappa|\tau|^\epsilon} d\tau < Kr^{-1+\beta},$$

and a similar inequality holds for the integral along M_2.

Hence
$$I_1 = -\frac{1}{2\iota}\int_{T,\pi} \psi_0(\rho s)\frac{z^s ds}{s \sin \pi s} + J', \tag{9}$$

where
$$\lim_{|z|\to\infty} |J' z^{-1+\beta}| < K,$$

and therefore
$$\lim_{|z|\to\infty} |J'(\log z)^{N_1}| = 0. \tag{9'}$$

5. From (7), (8), (8)', (9), and (9)' we now have

$$\left.\begin{aligned} &\log F(z) = -\tfrac{1}{2}\log z - \rho[\xi(-1/k)+\Sigma\rho_\nu\xi(-1/k_\nu)]+U(z)+J'',\\ &\text{where} \quad \lim_{|z|\to\infty} |J''(\log z)^{N_1}| = 0\\ &\text{and} \quad U(z) = -\frac{1}{2\iota}\int_{T_0,\pi} \psi_0(\rho s)\frac{z^s ds}{s \sin \pi s} \end{aligned}\right\}. \tag{1}$$

It remains, then, to consider the integral $U(z)$.

We shall prove the following preliminary results.

For all positive values of λ, *when* $|z| > 1$,

$$\int_{T_0}\left| s^\lambda \frac{z^s ds}{s \sin \pi s}\right| < K(\lambda/e)^\lambda |\log z|^{-\lambda+2}, \tag{2}$$

where K *is independent of both* z *and* λ.

For any value of κ, *positive or negative,*

$$\int_{T_0,\pi} s^{-\kappa}\frac{z^s ds}{s \sin \pi s}$$

$$= -\frac{2\iota \sin \kappa\pi}{\pi}(\log z)^{\kappa+1}\left[\Gamma(-\kappa-1)+\sum_{n=1}^{N_1}\Gamma(2n-\kappa-1)A_{2n}(\log z)^{-2n}\right]+{}_\kappa J_{N_1}, \tag{3}$$

where A_{2n} is the coefficient of t^{2n} in the expansion of $\pi t/\sin \pi t$, and where, for all values of N_1,

$$\lim_{z|\to\infty} |{}_\kappa J_{N_1} (\log z)^{-\kappa-1+2N_1}| = 0.$$

We suppose that $r = |z| > \exp[1/(1-\beta)]$, so that $(1-\beta)\log r > 1$. Let $s = x/\log z$, and let $\phi = \arg(\log z)$. Since $\log r > 0$, we have $|\phi| < \frac{1}{2}\pi$. Let T_0' be the contour in the x-plane corresponding to T_0 in the s-plane, so that T_0' is a circle described clockwise, starting from and returning to the point $-(1-\beta)\log z$. Let T_1 be an x contour, described clockwise, starting from and returning to $-(1-\beta)\log z$ and circumscribing the origin, which is such that at all points of T_1 $\Re x <$ a constant h and $|x| >$ a constant h', which lies between the parallels distant π from the real axis, and whose length is less than $2\pi|\log z|$. Let T_2 be the straight line from $-\infty - (1-\beta)\log z$ to $-(1-\beta)\log z$, parallel to the real axis, and let T_3 be T_2 described in the reverse direction.

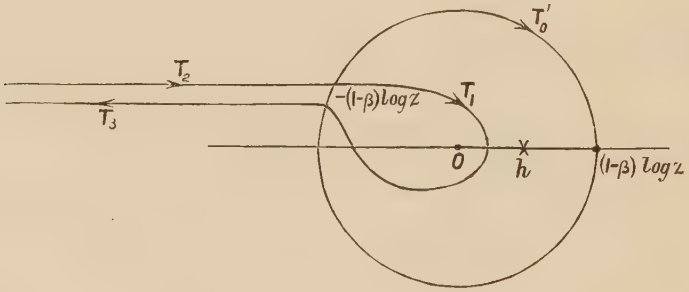

Consider the integral $\int_{T_1} |x^\lambda e^x dx|$. On T_1 we have

$$\xi = \Re x < h, \quad \text{and} \quad |Ix| < \pi.$$

Therefore, for all points x of T_1 we have

$$|x^\lambda e^x| < K\xi^\lambda e^\xi,$$

where K is independent of ξ and λ. Now $\xi^\lambda e^\xi$ has its maximum modulus for $\xi \leqslant h$, either when $\xi = h$ or when $\xi = -\lambda$. The value in the second case is $(\lambda/e)^\lambda$. Hence, on T_1, we have

$$|x^\lambda e^x| < K(\lambda/e)^\lambda;$$

and therefore

$$\int_{T_1} |x^\lambda e^x dx| < K(\lambda/e)^\lambda |\log z|, \tag{4}$$

since the length of T_1 is less than $2\pi|\log z|$.

Now for all points x of T_1, we clearly have

$$\left| \operatorname{cosec}\left(\frac{\pi x}{\log z}\right) \right| < K\,|\log z|,$$

since $|x|$ is greater than some constant h', and is not greater than $(1-\beta)\,|\log z|$. We therefore have

$$\int_{T_1} \left| x^{\lambda-1} e^x\,dx \operatorname{cosec}\left(\frac{\pi x}{\log z}\right) \right| < K\,|\log z|^2 \left(\frac{\lambda}{e}\right)^{\lambda},$$

and therefore, putting $x = s \log z$,

$$\int_{T_1} \left| s^{\lambda} \frac{z^s\,ds}{s \sin \pi s} \right| < K\,|\log z|^{-\lambda+2} \left(\frac{\lambda}{e}\right)^{\lambda},$$

the first of our results.

Turning to the second result, we shall show that

$$\int_{T_1,\,\pi+\phi} x^{-\kappa-2+2n} e^x\,dx = -2\iota \sin \kappa\pi\,\Gamma(2n-\kappa-1) + J(n,\kappa), \tag{5}$$

where $$\lim_{|z|\to\infty} |J(n,\kappa)(\log z)^p| = 0,$$

for all values of p.

The contour $T_2+T_1+T_3$ starts from and returns to $-\infty-(1-\beta)\log z$, and circumscribes the origin. Hence, by a well known result in the theory of the gamma-function,

$$\begin{aligned}\int_{T_2+T_1+T_3,\,\pi} x^{-\kappa-2+2n} e^x\,dx &= -2\iota \sin(-\kappa-1+2n)\pi\,.\,\Gamma(2n-\kappa-1) \\ &= -2\iota \sin \kappa\pi\,.\,\Gamma(2n-\kappa-1). \end{aligned} \tag{5}_1$$

Now, if x be any point of T_2 or T_3, $x = -\xi-(1-\beta)\log z$, where $\xi \geqslant 0$, and hence

$$\begin{aligned}|x^{-\kappa-2+2n} e^x| &< |x|^{2n} e^{-(1-\beta)\log r-\xi} \quad [\text{since } |x| \geqslant (1-\beta)\log r > 1] \\ &< r^{-(1-\beta)}\,|(1-\beta)\log z+\xi|^{2n} e^{-\xi},\end{aligned}$$

whence it easily follows that

$$\lim_{|z|\to\infty} \left| (\log z)^p \left\{ \int_{T_2} + \int_{T_3} \right\} x^{-\kappa-2} e^x\,dx \right| = 0. \tag{5}_2$$

From $(5)_1$ and $(5)_2$, we obtain (5).

When $|t|<1$, we have

$$\frac{\pi t}{\sin \pi t} = 1+\sum_{n=1}^{\infty} A_{2n} t^{2n},$$

where

$$A_{2n} = 2\,\frac{(2^{2n-1}-1)\,\pi^{2n} B_{2n}}{2n!}.$$

The radius of convergence of the series is 1, and we have

$$|A_{2n}| < K[(1-\beta)^{\frac{1}{2}}]^{-2n};$$

and therefore, when $|t| \leqslant 1-\beta$,

$$\left|\sum_{n=N_1+1}^{\infty} A_{2n} t^{2n}\right| \leqslant K \sum_{N_1+1}^{\infty} (1-\beta)^{-n} |t|^{2n} < K|t|^{2N_1+2}, \tag{6}$$

where K is independent of t. Now, for all points x of T_1, we have

$$|x/\log z| \leqslant 1-\beta;$$

therefore, by (6),

$$\left(\frac{\pi x}{\log z}\right) \operatorname{cosec}\left(\frac{\pi x}{\log z}\right) = 1+\sum_{n=1}^{N_1} A_{2n} (\log z)^{-2n} x^{2n} + A_{2N_1}(z)(\log z)^{-2N_1-2} x^{2N_1+2},$$

where $|A_{2N_1}(z)| <$ a K independent of x and z. Hence

$$\int_{T_1} e^x x^{-\kappa-2} \left(\frac{\pi x}{\log z}\right) \operatorname{cosec}\left(\frac{\pi x}{\log z}\right) dx$$

$$= \int_{T_1} e^x x^{-\kappa-2}\,dx + \sum_{n=1}^{N_1} A_{2n} (\log z)^{-2n} \int_{T_1} e^x x^{-\kappa-2+2n}\,dx$$

$$+ \int_{T_1} A_{2N_1}(z)(\log z)^{-2N_1-2} x^{2N_1-\kappa} e^x\,dx;$$

and therefore, by (5),

$$= -2\iota \sin \kappa\pi\, \Gamma(-\kappa-1) + J(0, \kappa)$$

$$+ \sum_{n=1}^{N_1} [-2\iota \sin \kappa\pi\, \Gamma(2n-\kappa-1)\, A_{2n} (\log z)^{-2n} + J(n, \kappa)] + J'(N_1, \kappa), \tag{7}$$

where $J'(N_1, \kappa)$ is the integral last written. Now

$$\lim_{|z|\to\infty} |(\log z)^{2N_1} J'(N_1, \kappa)| \leqslant \lim_{|z|\to\infty} K |\log z|^{-2} \int_{T_1} |x^{2N_1-\kappa} e^x dx| = 0,$$

by means of (4), provided that we suppose $2N_1-\kappa > 0$. Hence, since

$$\lim_{|z|\to\infty} |(\log z)^p J(n, \kappa)| = 0,$$

for all values of p, we have

$$\lim_{|z|\to\infty} \left| (\log z)^{2N_1} \left[J(0,\kappa) + \sum_{n=1}^{N_1} J(n,\kappa) + J'(N_1,\kappa) \right] \right| = 0. \tag{8}$$

Now if in the integral $\int_{T_0,\pi} s^{-\kappa} \frac{z^s\,ds}{s \sin \pi s}$ we make the transformation $s = x/\log z$, we obtain the integral on the left-hand side of (7), multiplied by $\pi\,(\log z)^{-\kappa-1}$. Then, from (7) and (8), we obtain at once the desired result (3).

Now let us consider $U(z)$. We have

$$U(z) = -\frac{1}{2\iota} \int_{T_0} \frac{\psi_0(\rho s)\, z^s}{s \sin \pi s}\, ds$$

$$= -\frac{1}{2\iota} \int_{T_0} \frac{(\rho s)^{-k} z^s\, ds}{s \sin \pi s} \left[\sum_{n=0}^{\infty} c_n (\rho s)^{\theta_n} \right],$$

where we have $c_0 = \Gamma(k+1), \quad \theta_0 = 0.$

Since the infinite series is uniformly convergent,

$$U(z) = -\sum_{n=0}^{\infty} \frac{c_n \rho^{\theta_n - k}}{2\iota} \int_{T_0} \frac{s^{\theta_n - k} z^s}{s \sin \pi s}\, ds$$

$$= -\sum_{n=0}^{N_2} \frac{c_n \rho^{\theta_n - k}}{2\iota} \int_{T_0} \frac{s^{\theta_n - k} z^s}{s \sin \pi s}\, ds + J(N_2), \tag{9}$$

where N_2 is any integer such that $\theta_{N_2} - k > e$, and where

$$J(N_2) = -\sum_{n=N_2+1}^{\infty} \frac{c_n \rho^{\theta_n - k}}{2\iota} \int_{T_0} \frac{s^{\theta_n - k} z^s}{s \sin \pi s}\, ds.$$

Now the modulus of the coefficient of $c_n \rho^{\theta_n - k}$ in the last series is less than $K\,(\log z)^{2+k-\theta_n} \left(\frac{\theta_n - k}{e}\right)^{\theta_n - k}$, by (2). Hence

$$|J(N_2)| < K\,|\log z|^{2+k} \sum_{n=N_2+1}^{\infty} |c_n|\, \rho^{\theta_n - k}\, |\log z|^{-\theta_n} (\theta_n/e)^{\theta_n}$$

(since $\overline{\theta_n - k}/e > 1$)

$$< K\,|\log z|^{2+k} \sum_{n=N_2+1}^{\infty} (K/\theta_n)^{\theta_n}\, |\log z|^{-\theta_n} (\theta_n/e)^{\theta_n},$$

by the inequality (iv.) of I., § 5,

$$< K\,|\log z\,|^{2+k}\sum_{N_2+1}^{\infty}\left[\frac{K}{|\log z\,|}\right]^{\theta_n}$$

$$< K\,|\log z\,|^{2+k-\theta_{N_2+1}}\sum_{N_2+1}^{\infty}\left[\frac{K}{|\log z|}\right]^{-\theta_n+\theta_{N_2+1}}$$

$$< K\,|\log z\,|^{2+k-\theta_{N_2+1}}\sum_{N_2=1}^{\infty}e^{-\theta_n+\theta_{N_2+1}}\quad(\text{provided } K<e\,|\log z\,|)$$

$$< K\,|\log z\,|^{2+k-\theta_{N_2+1}}, \tag{10}$$

$\Sigma e^{-\theta_n}$ being convergent, since $\theta_n > K^{-1}n^{1/(\mu+1)}$.

Now if we replace each term $\int_{T_0}\frac{s^{\theta_n-k}z^s}{s\sin\pi s}\,ds$ on the right-hand side of (9) by its equivalent given by (3), in which κ is to be replaced by $k-\theta_n$, we obtain

$$U(z)=\sum_{n=0}^{N_2}\rho c_n\frac{\sin(k-\theta_n)\pi}{\pi}\left(\frac{\log z}{\rho}\right)^{k-\theta_n+1}$$

$$\times\left[\Gamma(-k+\theta_n-1)+\sum_{m=1}^{N_1}\Gamma(2m-k+\theta_n-1)A_{2m}(\log z)^{-2m}\right]$$

$$+\sum_{n=0}^{N_2}{}^{k-\theta_n}J_{N_1}+J(N_2), \tag{11}$$

where we shall have

$$\lim_{|z|\to\infty}\left|(\log z)^p\left[\sum_{n=0}^{N_2}{}^{k-\theta_n}J_{N_1}+J(N_2)\right]\right|=0$$

for any given p, provided N_1 and N_2 are chosen sufficiently large. Moreover, all terms in the finite sum in (11) which are of degree in $\log z$ less than $-p$ may be absorbed into the remainder term, for they clearly satisfy an inequality similar to that last written. If we now substitute this asymptotic expansion for $U(z)$ in (1), we obtain the expansion for $\log F(z)$ stated at the beginning of the last article, and it is clear that if we take any number of terms of the expansion arranged in order of increasing indices of $(\log z)^{-1}$, if the last term be of order $(\log z)^{-p}$, we shall have

$$\lim_{|z|\to\infty}|(\log z)^p R|=0,$$

where R is the remainder.

6. The expansion found for $\log F(z)$ has been proved for the case when $k > 2$, and when $\rho, \rho_1, \rho_2, \ldots$ are real. It may be extended to the case when ρ is complex, and $\rho_1, \rho_2, \ldots$ are real, the variable z being excluded from a spiral strip, as in § 2, instead of an angle of the plane; the modified argument follows the lines of § 3. If, however, we suppose $\rho_1, \rho_2, \ldots$ complex, considerable difficulties appear to arise. And when we suppose $k < 2$, our line of proof breaks down, because we cannot then prove $|S(\rho s)| < K \exp[\epsilon |s|]$ in the region $\Re s > -l$. It is almost certain, indeed, that this inequality does not then hold. The expansion, as a matter of fact, is none the less valid.*

7. In the case of the function

$$F(z) = \prod_{n=1}^{\infty} \{1+z/\exp[\rho(n^{1/k}+\rho_1 n^{1/k_1})]\},$$

we have

$$\rho_2 = \rho_3 = \ldots = 0,$$

and (I., § 6)

$$\sum_{n=0}^{\infty} c_n s^{\theta_n} = \Gamma(k+1) + k \sum_{n=1}^{\infty} \frac{(-\rho_1)^n s^{n(1-k/k_1)}}{\Gamma(n+1)} \Gamma(nk/k_1+k).$$

Then we have the expansion

$$\log F(z) = -\rho[\zeta(-1/k)+\rho_1\zeta(-1/k_1)] - \tfrac{1}{2}\log z$$

$$+ \frac{k\rho}{\pi}\left(\frac{\log z}{\rho}\right)^{k+1} \sum_{n=0} \sin(k+nk/k_1)\pi . \Gamma(nk/k_1+k) \frac{(-\rho_1)^n}{n!} \left(\frac{\log z}{\rho}\right)^{-n(1-k/k_1)}$$

$$\times \Big[\Gamma\{n(1-k/k_1)-k-1\}$$

$$+ 2 \sum_{m=1} \Gamma\{2m+n(1-k/k, -k-1\} \frac{(2^{2m-1}-1)\pi^{2m}}{2m!} B_{2m} (\log z)^{-2m} \Big].$$

In the case $\rho_1 = 0$, in which

$$F(z) = \prod_{n=1}^{\infty} [1+z/\exp(\rho n^{1/k})],$$

---

* See the Abstract, p. 218.

the expansion may be written

$$\log F(z) = -\rho\zeta(-1/k) - \tfrac{1}{2}\log z + \frac{\rho}{k+1}\left(\frac{\log z}{\rho}\right)^{k+1}\left[1+2\sum_{n=1}{}_{k+1}C_{2n}(2^{2n-1}-1)\,\pi^{2n}B_{2n}(\log z)^{-2n}\right].$$

8. It is not possible to apply the foregoing methods to determine an asymptotic expansion for the functions $F(z)$ whose n-th zero is of less order than $\exp(n^k)$ for all values of k. Consider, for example, the function

$$F(z) = \prod_{n=2}^{\infty}\left[1+z/\left\{\exp(\log n)^{1+k}\right\}\right].$$

In this case $S(s)$ contains the terms

$$\sum_{1}^{\infty} A_n s^{-n/(1+k)}.$$

The term $s^{-n/(1+k)}$ gives rise to terms in $\log F(z)$ of the type

$$\left[\sum_{0} C_m(\log z)^{-2m}\right](\log z)^{n/(1+k)+1},$$

the series being an asymptotic one. An infinite series of such series cannot be combined into an asymptotic expansion. Moreover, if

$$\lim_{n\to\infty}\left|a_n e^{-n^{\epsilon}}\right| = 0,$$

for all values of ϵ, however small, it may be shown from arithmetic considerations that the maximum positive value of $\log\left|\Pi(1+z/a_n)\right|$ is of higher order in z than $(\log z)^p$, for all values of p, so that if $\log F(z)$ possesses an expansion in terms of $\log z$, it must involve an integral function of $\log z$.

[We obtain, in fact, by the general theory referred to in the Abstract, for the function

$$\prod_{n=2}^{\infty}\left[1+z/\exp\left\{\rho(\log n)^{1+k}\right\}\right],$$

$$\log F(z) = \exp\left\{\left(\frac{\log z}{\rho}\right)^{1/(1+k)}\right\}$$

$$\times\left[\rho(1+k)\left\{\left(\frac{\log z}{\rho}\right)^{k/(1+k)} - k\left(\frac{\log z}{\rho}\right)^{(k-1)/(k+1)} + k(k-1)\left(\frac{\log z}{\rho}\right)^{(k-2)/(k+1)} + \ldots\right\}\right.$$

$$\left. + \frac{\pi^2}{6\rho(1+k)}\left(\frac{\log z}{\rho}\right)^{-k/(1+k)} + \text{lower terms}\right].$$

The terms within square brackets may be found as far as any numerically assigned index of $1/\log z$, and give an asymptotic though probably divergent expansion. But this expansion is of a different character from those we have been considering, as it involves the factor $\exp\{(\log z/\rho)^{1/(1+k)}\}$].*

It may be noted, in conclusion, that it is possible to find asymptotic expansions for certain forms of $F(z)$ whose zeros are repeated, and whose n-th zeros are of the order $\exp(n^{1/k})$, $k > 1$. The function

$$\prod_{n=1}^{\infty}\left[1+\frac{z}{\exp(n^{1/k})}\right]^{n^{\lambda}}$$

is an example.† Its Dirichlet series defines the function

$$S(s) = k\Gamma(k\lambda+k)\,s^{-k\lambda-k} + \sum_{n=0}^{\infty}\frac{(-s)^n}{\Gamma(n+1)}\,\zeta(-\lambda-n/k),$$

as is seen by replacing λs by λ in the result of I., § 1. We may now proceed as in II., § 2, and if $k\lambda+k$ is an integer and $k > 2$, we obtain an asymptotic expansion for $\log F(z)$ analogous to that of that article.

[I take this opportunity of correcting an error in a proof in my paper "On the Asymptotic Approximation to Integral Functions of Zero Order," which appeared in these *Proceedings*, Ser. 2, Vol. 5, pp. 361–410.

From p. 380, l. 5, to p. 381, l. 3, should be replaced by the following argument.

We have $$\frac{\lambda}{2\eta}\,\frac{s-1}{n} < \frac{\lambda}{2\eta}\,\frac{\eta m}{n} < \tfrac{1}{2}\lambda.$$

Hence $$1-\exp\left(-\frac{\lambda}{2\eta}\,\frac{s-1}{n}\right) > \frac{1}{K}\left(\frac{\lambda}{2\eta}\,\frac{s-1}{n}\right),$$

---

* Added February 8th, 1909.

† The rank of the zero $-\exp(\rho n^{1/k})$ is not n but $1+(1^{\lambda}+2^{\lambda}+\ldots+\overline{n-1}^{\lambda})$. The n-th zero is, however, of the order $\exp[n^{1/(k\lambda+1)}]$.

where K is a constant (depending on λ) which is independent of n, for $(1-e^{-x})/x$ lies between finite limits when $x < \frac{1}{2}\lambda$. Hence, from (4),

$$1\Big/\left[1-\left(\frac{n+1}{n+s}\right)^{\lambda/\eta}\right] < K\Big/\left(\frac{\lambda}{2\eta}\,\frac{s-1}{n}\right) < \frac{K'\eta n}{s-1}.$$

Then, by a slight modification of l. 14, p. 380, to l. 3, p. 381, we obtain

$$|\sigma_1| < K''.\eta n + K'''.$$

This result then leads as in the text to (6), provided K_1 is suitably chosen. A similar modification must be made in the case of σ_3, p. 383, ll. 1–3.]

ON CERTAIN PERIODIC PROPERTIES OF CYCLIC COMPOSITIONS OF NUMBERS

By D. M. Y. SOMMERVILLE.

Communicated by PROF. W. BURNSIDE.

[Received October 9th, 1908.—Read November 12th, 1908.—Received, in revised form, February 4th, 1909.]

CONTENTS.

§§ 1–3. Introductory. Page

1. Statement of the problem. Row of order N with s symbols; evolution and involution; periodicity. Correspondence between pairs of symbols and single symbols; representation by multiplication table, its arbitrary nature 264
2. Special case of $(s, 1)$ correspondence. The s involutes of a row. Case where the symbols form a group 265
3. Order of the involutes in the case where the symbols form an Abelian group, and condition that an involute may be of the same order ... 265

I.

Elaboration of the Theory for Two Symbols.

4. Notation. Partitions, compositions and cyclic compositions. Multipartite numbers 268
5. Rules for evolution. Notation. Alternate rows 270
6. Rule for involution... 270
7. Definitions of proper, improper, regular, alien, degenerate and irreducible rows or compositions 270
8. Periodicity. Pure composition. Complete set 271
9. Condition that a composition may be proper 271
10. Symmetrical and enantiomorphic compositions and periods. Inverse and self-inverse compositions 272
11. Abandonment of the explicit distinction of alternate rows 273
12. Conjugate compositions. Graphical representation 273
13. Reduction of a cyclic composition of $2N$, modulo N. Interpretation of zero and negative parts 274
14. Interpretation of a negative number of ones 275
15. General theorems on reduction 276
16. Reduction a unique process 277
17. Successive reduction of a composition of $2^m\lambda$ 278
18. Reverse process of reduction; not unique 278
19. Relation between the periods of $2N$ and those of N 278
20. Reduction of a regular or an even alien composition; and converse theorem 279

Page

21. Reduction of an odd alien composition 281
22. Every composition of 2^m is degenerate 283
23. Condition for degeneracy 284
24. Successive evolution 284
25. Operation of doubling a composition. Theorems and corollaries 285
26. Doubling and reducing. Theorems for N odd and even 286
27. Reverse process. Unique if N is odd 287
28. Periodicity 288
29. If N is odd every period contains an odd number of members. Enantiomorphic periods. Primarily isomorphic periods 290
30. Conjugate sets of secondarily isomorphic periods. Self-conjugate period. Symmetrical, enantiomorphic and racemic sets 290
31. Two auxiliary theorems 292
32. Number of members in a period, N odd. Normal period and short periods 293
33. Alternative proof for $E^{2^t-1}P = P$ 294
34. Short periods; in particular periods of 1 294
35. Number of involutes and normal period of a pure composition of $2^m\lambda$ ... 295
36. Impure compositions which reduce to pure compositions 297
37. Number of involutes of a regular composition 298
38. Generating compositions of a period 298

II.

Enumeration of Cyclic Compositions.

39. Number of compositions and of self-inverse compositions. Notation for number of cyclic compositions 301
40. $Cy\sigma\,(N, R)$ 302
41. $Cy\,(N, R)$ 304
42. Number of aliens and regular compositions 306
43. Number of improper compositions 306
44. $Cy\bar{a}\,(N, \text{even}) = Cy\bar{a}\,(N, \text{odd})$ 307
45. $Cy\bar{a}\,(N, \text{even})$ 309

Appendix.

I. Table of numbers of cyclic compositions and periods up to $N = 20$.
II. Generating compositions of the periods, and sets of periods from $N = 3$ to $N = 15, 17, 19$.

---

1. Consider a collection of s symbols and let a row of N of these be arranged in any way with or without repetitions, and imagine this row to be repeated indefinitely in both directions, or, what comes to the same thing, to be arranged in a circle. We shall call this a *row of order N*. Now let this row be endowed with the capacity of generating another row by the following process. Let the symbol α followed by the symbol β be represented by the symbol λ, one of the set. It is convenient to imagine the symbols as operations which are combined according to a given multiplication table, so that the sequence $\alpha\beta$ is represented by the product

$\alpha\beta = \lambda$. Then, the multiplication table being given, any row S will generate uniquely another row T of order N in the s symbols. Thus, if $\alpha\beta = \lambda$, $\beta\gamma = \mu$, $\gamma\delta = \nu$, ..., $\alpha\beta\gamma\delta \ldots$ generates $\lambda\mu\nu \ldots$. We shall call T the first *evolute* of S. This row, again, will generate another row of order N. Then, since the number of arrangements, with or without repetitions, of N things out of s things is finite, when this process is continued we must, after a finite number of operations, return to one of the previous rows. From this row onwards the rows form a *period.* Conversely, if the row S produces the row T, we may reverse the process and obtain S from T, but in general there are several rows which will all produce T and the reverse process is not unique. If T is the first evolute of S, we shall call S a first *involute* of T.

The multiplication table of the symbols may be fixed quite arbitrarily. As there are s^2 pairs, the order being taken into account, there may be s or more pairs corresponding to a single symbol. If the symbol α corresponds to no pair, any row containing α will, of course, possess no involute.

2. An interesting special case is that in which for every symbol α, the pairs $\alpha\alpha$, $\alpha\beta$, $\alpha\gamma$, ... are all represented by different symbols, and for every symbol α the pairs $\alpha\alpha$, $\beta\alpha$, $\gamma\alpha$, ... are all represented by different symbols. In this case, in general, *every row has s involutes.* For, consider the row $\lambda_1\lambda_2 \ldots \lambda_N$. λ_1 represents s different pairs. Suppose one of them to be $\alpha_1\alpha_2$. Then there is just one symbol α_3, such that $\alpha_2\alpha_3$ is represented by λ_2, and the row can only be continued in one way. It may happen that some of these s involutes are the same.

If $\alpha_N\alpha_1$ is represented by λ_1 the involute is of order N. But if $\alpha_N\alpha_1$ is not represented by λ_1, we have $\alpha_N\alpha_1'$ represented by λ_1, then $\alpha_N'\alpha_1''$, and so on, until we get finally $\alpha_N^{(t-1)}\alpha_1$ represented by λ_1. Then the involute is of order tN, and this multiple involute counts as t of the possible s involutes.

A still more special case is that in which the symbols can be represented by the operations of a group, or, let us say, form a group, and in particular an Abelian group.

3. To investigate the order of the involutes of a row in the case where the symbols form an Abelian group, consider the row

$$\lambda_1\lambda_2 \ldots \lambda_N,$$

and let $$\alpha_1\alpha_2 = \alpha_1'\alpha_2' = \lambda_1,$$
$$\alpha_2\alpha_3 = \alpha_2'\alpha_3' = \lambda_2,$$
$$\ldots \quad \ldots \quad \ldots \quad \ldots$$
$$\alpha_{N-1}\alpha_N = \alpha_{N-1}'\alpha_N' = \lambda_{N-1}.$$

Then $$\alpha_2 = \alpha_1^{-1}\alpha_1'\alpha_2',$$

therefore $$\alpha_2\alpha_3 = \alpha_1^{-1}\alpha_1'\alpha_2'\alpha_3 = \alpha_2'\alpha_3', \qquad i.e., \ \alpha_1'\alpha_3 = \alpha_1\alpha_3';$$

also $$\alpha_3 = \alpha_1'^{-1}\alpha_1\alpha_3',$$

therefore $$\alpha_3\alpha_4 = \alpha_1'^{-1}\alpha_1\alpha_3'\alpha_4 = \alpha_3'\alpha_4', \qquad i.e., \ \alpha_1\alpha_4 = \alpha_1'\alpha_4';$$

and generally $$\alpha_1'\alpha_{2r-1} = \alpha_1\alpha_{2r-1}',$$
$$\alpha_1\alpha_{2r} = \alpha_1'\alpha_{2r}'.$$

Hence, if N is odd and $= 2m+1$,

$$\alpha_{2m+1}\alpha_1' = \alpha_{2m+1}'\alpha_1 = \lambda_N,$$

and the involute of $$\lambda_1\lambda_2 \ldots \lambda_{2m+1}$$

is $$\alpha_1\alpha_2 \ldots \alpha_{2m+1}\alpha_1'\alpha_2' \ldots \alpha_{2m+1}',$$

and is thus of order $2N$, unless $\alpha_1' = \alpha_1$, when it is of order N.

Again, if N is even and $= 2m$,

$$\alpha_{2m}\alpha_1' = \alpha_1^{-1}\alpha_1'\alpha_{2m}'\alpha_1' = \alpha_{2m}'\alpha_1'^2\alpha_1^{-1}.$$

Let $$\alpha_1'^2\alpha_1^{-1} = \alpha_1'',$$

then $$\alpha_{2m}'\alpha_1'' = \alpha_1'^{-1}\alpha_1''\alpha_{2m}''\alpha_1'' = \alpha_{2m}''\alpha_1'^{-1}\alpha_1'^4\alpha_1^{-2} = \alpha_{2m}''\alpha_1'^3\alpha_1^{-2}.$$

Let $$\alpha_1'^3\alpha_1^{-2} = \alpha_1''',$$

then, similarly, $$\alpha_{2m}''\alpha_1''' = \alpha_{2m}'''\alpha_1^{\mathrm{iv}},$$

where $$\alpha_1'^4\alpha_1^{-3} = \alpha_1^{\mathrm{iv}}.$$

Suppose $$\alpha_1^{(p)} = \alpha_1^{(q)},$$

where $$p > q.$$

Then $$\alpha_1'^p\alpha_1^{-p+1} = \alpha_1'^q\alpha_1^{-q+1}, \qquad i.e., \quad \alpha_1'^{p-q} = \alpha_1^{p-q}.$$

Then $$\alpha_1^{(p-q)} = \alpha_1'^{p-q}\alpha_1^{-p+q+1} = \alpha_1^{p-q}\alpha_1^{-p+q+1} = \alpha_1,$$

and if t is the smallest index for which $\alpha_1'^t = \alpha_1$, the involute of $\lambda_1 \ldots \lambda_{2m}$ will be of order $2tm$, and t must be a factor of the order of the group, *i.e.*, of s. Hence, if s is prime, the involute of any row of order N will be a row of order either N, $2N$ or sN. Also for a row of even order, if an

involute of S is $R_1 R_2 \dots R_t$, then the evolutes of R_1, R_2, ... are all the same, though not equal to S, for $a_{2m} a_1 = a'_{2m} a'_1 = \dots$.

To find the condition that the involute of a row of order N may also be a row of order N.

We have

$$a_1 a_2 = \lambda_1, \quad a_2 a_3 = \lambda_2, \quad \dots, \quad a_{N-1} a_N = \lambda_{N-1}, \quad a_N a_1 = \lambda_N.$$

$$a_2 = a_1^{-1} \lambda_1, \quad \text{therefore} \quad a_2 a_3 = a_1^{-1} \lambda_1 a_3 = \lambda_2 ;$$

hence
$$\lambda_1 a_3 = \lambda_2 a_1.$$

$$a_3 = \lambda_1^{-1} \lambda_2 a_1, \quad \text{therefore} \quad a_3 a_4 = \lambda_1^{-1} \lambda_2 a_1 a_4 = \lambda_3 ;$$

hence
$$\lambda_2 a_1 a_4 = \lambda_1 \lambda_3.$$

Similarly,
$$\lambda_1 \lambda_3 \dots \lambda_{2r-1} a_{2r+1} = \lambda_2 \lambda_4 \dots \lambda_{2r} a_1,$$

$$\lambda_1 \lambda_3 \dots \lambda_{2r-1} = \lambda_2 \lambda_4 \dots \lambda_{2r-2} a_1 a_{2r}.$$

Let $N = 2m+1$.

$$a_{2m+1} a_1 = \lambda_{2m+1} = \lambda_2 \lambda_4 \dots \lambda_{2m} a_1 (\lambda_1 \lambda_3 \dots \lambda_{2m-1})^{-1} a_1,$$

i.e.,
$$\lambda_1 \lambda_3 \dots \lambda_{2m+1} = \lambda_2 \lambda_4 \dots \lambda_{2m} a_1^2.$$

Let $N = 2m$.

$$a_{2m} a_1 = \lambda_{2m} = \lambda_1 \lambda_3 \dots \lambda_{2m-1} (\lambda_2 \lambda_4 \dots \lambda_{2m-2})^{-1},$$

i.e.,
$$\lambda_1 \lambda_3 \dots \lambda_{2m-1} = \lambda_2 \lambda_4 \dots \lambda_{2m}.$$

Hence (1) *A row of order* $2m+1$ *has involutes of order* $2m+1$ *in which the first symbol* a_1 *is determined by*

$$a_1^2 = (\lambda_1 \lambda_3 \dots \lambda_{2m+1})(\lambda_2 \lambda_4 \dots \lambda_{2m})^{-1},$$

and every other involute, starting with a symbol a_1 *which does not satisfy this equation is of order* $2(2m+1)$.

(2) *A row of order* $2m$ *has all its involutes of order* $2m$ *if*

$$\lambda_1 \lambda_3 \dots \lambda_{2m-1} = \lambda_2 \lambda_4 \dots \lambda_{2m} ;$$

but if this condition is not satisfied its involutes will be of order $2mt$, *where* t *is the smallest index for which* $a_1'^t = a_1^t$, *and* t *is a factor of* s.

Two particular cases may be noticed.

(1) s an odd prime.

A row of order $2m+1$ has one involute of order $2m+1$ and $\frac{1}{2}(s-1)$ involutes of order $2(2m+1)$.

A row of order $2m$ has either s involutes of order $2m$ or one involute of order $2ms$.

(2) s a power of 2, and the group of type (1, 1, 1, ...).

A row of order N has either s involutes of order N or $\frac{1}{2}s$ involutes of order $2N$ according as $\lambda_1\lambda_3\ldots$ is, or is not, equal to $\lambda_2\lambda_4\ldots$.

I.

4. The simplest case, and that to which our attention will be confined, is the case of two symbols which we may denote by $+$ and $-$, and connect by the usual law of signs

$$+ + = - - = +, \quad + - = - + = -,$$

i.e., a permanence of sign is denoted by $+$ and a change of sign by $-$. These symbols may evidently be represented by the operations of an Abelian group of order 2.

In order to represent a row of order N let (p) represent a sequence of p plus signs and q a sequence of q minus signs. Then the row may be represented by

$$(p_1)\,q_1(p_2)\,q_2\ldots(p_r)\,q_r,$$

where

$$\sum_1^r (p_\rho + q_\rho) = N.$$

This represents a partition of N into $2r$ parts. Every row of order N is therefore represented by a partition of N into an even number of parts, where the cyclic order of the parts is taken into account, and the "plus" and "minus" parts, which follow alternately, are distinguished.

A partition of N in which the order of the parts is essential has been called by Glaisher* a *composition* of N. A partition in which only the cyclic order of the parts is essential will here be called a *cyclic composition*. If there is no risk of confusion we may use simply the term composition. We may say then that every row of order N is represented by an *even cyclic composition*. We shall have also to consider compositions of N with an odd number of parts, or *odd compositions*. From the present point of view an odd cyclic composition standing by itself condenses at once into an even cyclic composition, as $(p)\,q\,(r)$ into $(p+r)\,q$, but this process is to be excluded and an odd cyclic composition is to be considered

* Cf. MacMahon, "The Theory of Perfect Partitions of Numbers and the Compositions of Multipartite Numbers," *Messenger of Mathematics*, Vol. xx. (1891), pp. 103–119.

as *imperfect* and as giving a row only when conjoined with the *alternate** composition, as $(p)\,q\,(r)\,p\,(q)\,r$.

Let us attempt to extend this nomenclature to the general case of s symbols. The number which expresses a collection of s different kinds of objects, n_1 of a_1, n_2 of a_2, ... is called a *multipartite number*,† and is written

$$(n_1 n_2 \ldots).$$

A partition of such multipartite number is

$$(a_1 a_2 \ldots,\ b_1 b_2 \ldots,\ \ldots),$$

where $\Sigma a_1 = n_1$, $\Sigma a_2 = n_2$, ..., and if the order of the parts $a_1 a_2 \ldots$, $b_1 b_2 \ldots$, ... is essential, we have a composition of the s-partite number. In the present theory not only the cyclic order of the parts is essential, but also the cyclic order of the whole row. Two compositions, as

$$\alpha\alpha\beta\beta\gamma\beta\alpha\beta\gamma \quad \text{and} \quad \beta\gamma\beta\alpha\beta\gamma\alpha\alpha\beta,$$

represented by 221,010,111 and 011,010,111,210,

are in this theory considered identical; so that a row can be represented in many ways by a composition of the same s-partite number. Further, the evolute of a row which is represented by a composition of an s-partite number is not in general represented by a composition of the same s-partite number. Thus, if the multiplication table for the symbols α, β, γ is

	α	β	γ
α	α	β	γ
β	β	γ	α
γ	γ	α	β

the evolute of $\alpha\alpha\beta\beta\gamma\beta\alpha\beta\gamma$ is $\alpha\beta\gamma\alpha\alpha\beta\beta\alpha\gamma$, which is represented by 111,220,101, a composition of the tripartite number 432, while $\alpha\alpha\beta\beta\gamma\beta\alpha\beta\gamma$ is represented by a composition of 342. In the particular case of two symbols, again, a row would be represented by a composition of a bipartite number denoting the number of plus and minus signs; but here again, for example, the evolute of 23 is 1121, a composition of 32, not 23. The multipartite number is therefore not invariable during the operations, though the total number of symbols is, and we gain nothing by representing a row by a composition of a multipartite number. In the case of two symbols we shall find that for most purposes the distinction between

---

* See below, § 5.

† MacMahon, *Messenger of Mathematics*, Vol. xx., p. 107. Also "Memoir on Symmetric Functions of the Roots of Systems of Equations," *Phil. Trans.*, Vol. CLXXXI., A. (1890), pp. 481–536.

the plus and minus parts can be disregarded, and a row can be represented by an even cyclic composition of the *unipartite* number N.

5. *Rules for Evolution.*

Consider the row $(p)\,q\,(r)\,s$. (p) denotes a sequence of p plus signs, and on evolution gives $p-1$ plus signs, similarly q gives $q-1$ plus signs. Also in passing from (p) to q or from q to (r) we have one change of sign, which is represented by a minus. Hence the first evolute of $(p)\,q\,(r)\,s$ is

$$(p-1),\ 1,\ (q-1),\ 1,\ (r-1),\ 1,\ (s-1),\ 1.$$

If $q = 1$, this rule fails. We have then two consecutive changes of sign from (p) to (r), and this is represented by 2. Similarly a sequence of q ones gives $q+1$ minus signs. Hence, denoting a sequence of q ones by 1^q, the first evolute of

$$(p),\ 1^q,\ (r),\ \ldots$$

is

$$(p-1),\ q+1,\ (r-1),\ \ldots\ .$$

We shall denote the r-th evolute of P by E^rP and an r-th involute by $E^{-r}P$, remembering, however, that the inverse operation is not unique.

The first evolutes of $(p)\,q\,(r)\,s\ldots$ and $p\,(q)\,r\,(s)\ldots$ are the same. Two rows which only differ by interchanging the plus and minus signs are called *alternate*. The alternate of P will be denoted by $\bar{P}$.

6. *Rule for Involution.*

A row $(p)\,q\,(r)\,s\ldots$ of order N has, in general, two involutes

$$(p+1),\ 1,\ (1),\ 1,\ \ldots \quad \text{and} \quad p+1,\ (1),\ 1,\ (1),\ \ldots,$$

and these are alternate rows, P, $\bar{P}$, of order N. But the involute may be of order $2N$. In this case P, $\bar{P}$ are imperfect and the single involute is represented by $P\bar{P}$.

7. A row which has two involutes of the same order as itself will be called *proper*, one which has one involute of double the order *improper*.

A row of $2N$, such as $P\bar{P}$, in which P is imperfect, will be called *regular*. Its first evolute is QQ, where Q is an even composition, but this is just a row of N. Considered as a row of $2N$, QQ will be called *alien*.

A more general definition of an alien may be given.

An *alien* of order kN consists of a non-alien row or composition of N

repeated k times, and it is said to *appertain* to N; it will be called an even or an odd alien according as k is even or odd. The following case is excluded.

A *regular* row of $2N$ consists of a non-alien composition of N repeated twice.

A row, one of whose successive evolutes is alien is said to be *degenerate.* A row of N whose successive evolutes are all non-alien rows of N is said to be *irreducible.*

If N is odd there can be no regular rows, and therefore no degenerate rows, but there may be aliens. If N is prime every row is irreducible.

The evolutes of any row, if they are not alien, are proper.

The involutes of any improper row are degenerate.

8. If an irreducible row of N be repeatedly evolved, we shall return after a finite number of operations to a previous evolute. Suppose

$$E^n P = E^r P.$$

Then we have a period of $n-r$, and every irreducible row either belongs to a period or evolves to a row belonging to a period. A row belonging to a period is called a *pure* row. Every pure row is proper.

Let the rows of a period be involved successively. Each row gives first the previous row of the period and its alternate. Each of the alternates, if they are proper, then gives two other rows, and each of these again two others, until we arrive at improper rows. This must happen at some stage since the number of compositions is finite, and since no further periods can arise, and of these improper rows there is, of course, a finite number. The set of all these rows, any one of which evolves finally to a pure row of the same period, forms the *complete set* of rows belonging to the period. If these are arranged in a scheme such that each row is the evolute of the next row to the left and an involute of the next to the right, we have on the right the period and on the left a dichotomous arborescence ending with improper rows.

If a row is degenerate it is either a regular row or an involute of a regular row. This is obvious from the way in which a regular row arises.

9. *Condition that a row may be proper.*

The first involute of

$$(p_1)\, q_1\, (p_2)\, q_2 \ldots (p_a)\, q_a,$$

is

$$p_1+1,\ 1^{q_1-1},\ p_2+1,\ 1^{q_2-1},\ \ldots,$$

and the number of parts must be even. But the number of parts is

$$a+\Sigma(q-1) = \Sigma q.$$

Hence the condition is that the sum of the "minus" parts, or the number of minus signs, must be even.

This can be deduced also from the condition in the general case,

$$\lambda_1\lambda_3 \ldots = \lambda_2\lambda_4 \ldots .$$

This gives $$\lambda_1\lambda_2\lambda_3 \ldots = (\lambda_1\lambda_3 \ldots)^2 = +,$$

which proves the result.

If N is even, two alternates are either both proper or both improper. If N is odd, of two alternates one is proper and the other improper.

10. A row which reads the same way backwards as forwards is called *symmetrical.** Unsymmetrical rows occur as pairs of *enantiomorphs.*

The evolutes of a symmetrical row are symmetrical, and the successive corresponding evolutes of two enantiomorphs are either enantiomorphs or identical and symmetrical.

Also, if one member of a period is symmetrical, all the members of the period are symmetrical. Such a period will be called a *symmetrical period.*

Again, if one member of a period be unsymmetrical, no member of the complete set is symmetrical.

If† two enantiomorphs belong to the same period every row is accompanied in the period by its enantiomorph.

For, if P and P' both occur and the successive evolutes of P are $QRS \ldots$, the successive evolutes of P' are $Q'R'S' \ldots$. The period must, therefore, be of the form $PQR \ldots XP'Q'R' \ldots X'$. If this does not happen then we have pairs of enantiomorphic periods and sets.

---

* MacMahon [*Phil. Trans.*, Vol. CLXXXIV., A. (1893), p. 838] calls a composition which is formed by reversing the order of the parts of another composition, the *inverse* of the other composition, and a composition which reads the same way backwards as forwards a *self-inverse* composition. These terms will be retained when we are dealing with ordinary compositions, but as it will be convenient to speak of a cyclic composition as being symmetrical about some part or pair of parts the term symmetrical seems to be more useful for our purpose than either self-inverse or reversible.

† It is proved later (§ 29) for the case where N is odd that this is impossible.

11. It will be convenient now to drop the explicit distinction between a row and its alternate. A row will then be represented simply by a cyclic composition of the unipartite number N. We may say then that every composition, unless it is regular, has two first involutes, viz., the involutes of P will be $E^{-1}P$ and $E^{-1}\bar{P}$. These are not, of course, alternates, and they are identical if P is regular, for then $\bar{P} = P$. Then a pure composition has two involutes, one of which belongs to the period. If N is odd, one involute is of order $2N$, and a composition is either alien or pure. In this case the complete set contains only the period. If N is even the distinction between proper and improper compositions survives.

12. Two cyclic compositions which have the same first evolute are *conjugate* in the corresponding sense to that in which the term is used by MacMahon for ordinary compositions.

Adapting his graphical representation we may represent a cyclic composition by a series of nodes and links in a circle. The number of links between two successive nodes denotes a part of the composition. The conjugate is obtained by suppressing the existing nodes and putting nodes at the other angular points. Thus we have a cyclic composition of 12 and its conjugate.

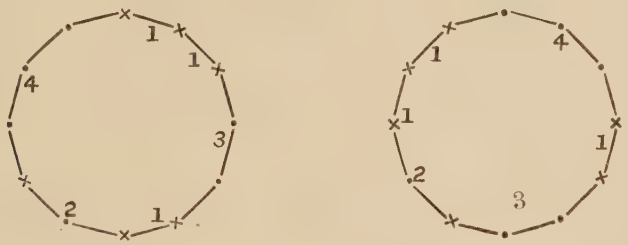

The cyclic composition represented by

$$a_1, 1^{a_1}, a_2, 1^{a_2}, \ldots,$$

will have for its conjugate

$$1^{a_1-2}, a_1+2, 1^{a_2-2}, a_2+2, \ldots,$$

and the first evolute of either is

$$a_1-1, a_1+1, a_2-1, a_2+1, \ldots.$$

Graphically, the first evolute is obtained by replacing links by points and points by links, and putting nodes at points which replace links un-

symmetrically bounded. Thus the first evolute of the above compositions is represented by

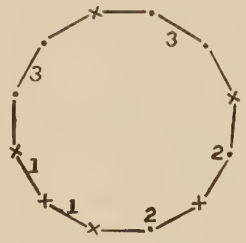

If R is the number of parts in a cyclic composition, the number of parts in the conjugate is $N-R$. Hence, if N is odd the conjugate cyclic composition is imperfect.

Conjugate compositions are always distinct, but a cyclic composition may be *self-conjugate*. This requires that N be even and $R = \frac{1}{2}N$, and the composition is the first involute of a regular composition or of an alien consisting of a regular composition repeated. Thus $1^2 3412$ is self-conjugate and its first evolute is 321321 ; $1^2 41^2 4$ is self-conjugate and its first evolute is 3333. A self-conjugate cyclic composition is therefore always degenerate; but the converse is not true, thus 12321223 is degenerate (§ 22), but its conjugate is 32123221.

A cyclic composition may be *inversely conjugate*, *i.e.*, its conjugate may be the original composition read backwards. In this case also $R = \frac{1}{2}N$, and the first evolute must be symmetrical. *E.g.*, $1^2 2242$ is inversely conjugate, its conjugate being $4221^2 2$, and its first evolute $31^4 31^2$.

13. We shall proceed now to consider some other processes to which the compositions can be subjected.

Reduction of a cyclic composition of $2N$, *modulo* N.

Take any cyclic composition P of $2N$ in which one of its parts exceeds N. Then, on subtracting N from this part, we get a cyclic composition of N which will be denoted by $P \pmod N$.

Consider the composition $P = p, q, N+r, s,$

where $p+q+r+s = N$ and $r > 1$.

Evolving, we get $p-1, 1, q-1, 1, N+r-1, 1, s-1, 1.$

On reducing the original composition, modulo N, we get $p, q, r, s,$ and its first evolute is $p-1, 1, q-1, 1, r-1, 1, s-1, 1,$ and this is the same as the

first evolute of P reduced modulo N, *i.e.*,

$$E\{P(\text{mod}\, N\} = \{E(P)\}\ (\text{mod}\ N).$$

To investigate the rules for reduction, modulo N, when no part exceeds N, we shall fix the condition represented by this equation.

If $\quad P = p,\ 1^{q-1},\ N+1,\ 1^{s-1}, \quad P\ (\text{mod}\ N) = p,\ 1^{q+s-1},$

then $\quad \{E(P)\}\ (\text{mod}\ N) = p-1,\ q,\ 0,\ s$

and $\quad E\{P(\text{mod}\ N)\} = p-1,\ q+s.$

Hence $\quad q,\ 0,\ s = q+s.$

Next let $\quad P = p,\ 1^{q-1},\ N,\ 1^{s-1}.$

$$P(\text{mod}\ N) = p,\ 1^{q-1},\ 0,\ 1^{s-1} = p,\ 1^{q-2},\ 2,\ 1^{s-2}.$$

$$E\{P(\text{mod}\ N)\} = p-1,\ q-1,\ 1,\ s-1,$$

$$\{E(P)\}\ (\text{mod}\ N) = p-1,\ q,\ -1,\ s.$$

Hence $\quad q,\ -1,\ s = q-1,\ 1,\ s-1.$

Proceeding in this way, it may be shown generally that

$$q,\ -r,\ s = q-r,\ r,\ s-r.$$

We may thus introduce zero and negative parts subject to the following rules:—

I. $\quad p,\ 0,\ q = p+q,$

II. $\quad p,\ 0,\ 0,\ q = p,\ q,$

III. $\quad p,\ -q,\ r = p-q,\ q,\ r-q.$

These rules for the elimination of zero and negative parts may be taken to be quite general. It will sometimes be convenient in evolving a composition to retain zero or negative parts. A negative part will sometimes be written with the minus over the part, as $\bar{p}$.

14. Having found an interpretation for zero and negative parts, let us investigate the meaning of a negative number of ones.

A first involute of $p,\ q$ is $p+1,\ 1^{q-1}$. Let us assume that this holds whether p and q be positive or negative, then we have

$$E^{-1}(p,\ \bar{q}) = p+1,\ 1^{-(q+1)}.$$

Also $\quad p,\ \bar{q},\ r,\ s = p-q,\ q,\ r-q,\ s$

and $\quad E^{-1}(p,\ \bar{q},\ r,\ s) = p+1,\ 1^{-(q+1)},\ r+1,\ 1^{s-1}$

$$= p-q+1,\ 1^{q-1},\ r-q+1,\ 1^{s-1}.$$

Hence $\quad p,\ 1^{-(q+1)},\ r = p-q,\ 1^{q-1},\ r-q.$

If $q = 0$, $\quad p, 0, r, s = p+r, s$

and $\quad E^{-1}(p+r, s) = p+r+1, 1^{s-1}.$

Hence $\quad p, 1^{-1}, r = p+r-1,$

15. *General Theorems on Reduction.*

I. $p_1-N, p_2, p_3, \ldots, p_k$

$$= p_2, p_3, p_4, \ldots, p_r, N-\sum_1^r p_\rho, \sum_1^{r+1} p_\rho - N, p_{r+2}, \ldots, p_{k-1}, p_k+p_1-N.$$

Assume this to be true for r, then we get as the next step (§ 13, III.)

$$p_2, p_3, \ldots, p_r, p_{r+1}, N-\sum_1^{r+1} p_\rho, \sum_1^{r+2} p_\rho - N, p_{r+3}, \ldots, p_{k-1}, p_k+p_1-N.$$

But the first step is

$$N-p_1, p_1+p_2-N, p_3, \ldots, p_{k-1}, p_k+p_1-N.$$

Hence the process is established.

II. $p-N, 1^q, r, 1^s = 1^{N-(p+\lambda)}, \lambda+1, 1^{p+q-N-1}, r, 1^{s-\lambda}, p+\lambda-N.$

By Theorem I. the left-hand side becomes

$$1^\lambda, N-(p+\lambda), p+\lambda+1-N, 1^{q-\lambda-1}, r, 1^{s-1}, p+1-N.$$

Put $\lambda = N-(p+1)$, and we get

$$1^{N-(p+1)}, 1, 0, 1^{p+q-N}, r, 1^{s-1}, p+1-N$$
$$= 1^{N-(p+1)}, 2, 1^{p+q-N-1}, r, 1^{s-1}, p+1-N.$$

By the same process this gives

$$1^\lambda, N-(p+1-\lambda), p+\lambda+2-N, 1^{N-(p+\lambda+2)}, 2, 1^{p+q-N-1}, r, 1^{s-2}, p+2-N,$$

and, putting $\lambda = N-(p+2)$,

$$1^{N-(p+2)}, 1, 0, 2, 1^{p+q-N-1}, r, 1^{s-2}, p+2-N$$
$$= 1^{N-(p+2)}, 3, 1^{p+q-N-1}, r, 1^{s-2}, p+2-N.$$

Now assume the theorem for λ such steps, and we have

$$p+\lambda-N, 1^{N-(p+\lambda)}, \lambda+1, 1^{p+q-N-1}, r, 1^{s-\lambda},$$

which becomes at the next stage

$$1^\mu, N-(p+\lambda+\mu), p+\lambda+\mu+1-N, 1^{N-(p+\lambda+\mu+1)},$$
$$\lambda+1, 1^{p+q-N-1}, r, 1^{s-\lambda-1}, p+\lambda+1-N,$$

and, putting $\mu = N-(p+\lambda+1)$, we get

$$1^{N-(p+\lambda+1)},\ 1,\ 0,\ \lambda+1,\ 1^{p+q-N-1},\ \ldots$$
$$= 1^{N-(p+\lambda+1)},\ \lambda+2,\ 1^{p+q-N-1},\ r,\ 1^{s-(\lambda+1)},\ p+\lambda+1-N.$$

Hence the theorem is established.

III. $p-N,\ 1^q,\ r,\ s,\ 1^t = q+2,\ 1^{N-(p+q+1)},\ p+q+r-N,\ s,\ 1^{t+p-N-1}$.

By Theorem II. the left-hand side is equal to

$$1^{N-(p+\lambda)},\ \lambda+1,\ 1^{p+q-N-1},\ r,\ s,\ 1^{t-\lambda},\ p+\lambda-N.$$

Put $\lambda = N-p$, and we get

$$N-p+1,\ 1^{p+q-N-1},\ r,\ s,\ 1^{t+p-N},\ 0$$
$$= N-p+2,\ 1^{p+q-N-1},\ r,\ s,\ 1^{t+p-N-1}$$
$$= q+2,\ 1^{N-1-p-q},\ p+q+r-N,\ s,\ 1^{t+p-N-1} \quad (\S\ 14).$$

Hence the theorem is true.

We may, of course, interpolate any parts between the r and the 1^t, as these are not affected by the process. Also, in all three theorems N may have any value.

16. We have now to show that the process of reduction is unique.

Let
$$P = p_1, p_2, \ldots, p_k,$$
where
$$\Sigma p = 2N.$$

By Theorem I.,

$$p_1, p_2-N, p_3, \ldots, p_k$$
$$= p_1+p_2-N, p_3, \ldots, p_r, N-\sum_2^r p_\rho, \sum_2^{r+1} p_\rho - N, p_{r+2}, \ldots, p_k.$$

Putting $r = k-1$, we get

$$p_1+p_2-N, p_3, \ldots, p_{k-1}, N-\sum_2^{k-1} p_\rho, \sum_2^k p_\rho - N$$
$$= p_1+p_2-N, p_3, \ldots, p_{k-1}, p_1+p_k-N, N-p_1$$
$$= p_2, p_3, \ldots, p_{k-1}, p_k, p_1-N.$$

Then, since $p_1, p_2-N, p_3, \ldots, p_k = p_1-N, p_2, p_3, \ldots, p_k,$

therefore $p_1, p_2, p_3-N, p_4, \ldots, p_k = p_1, p_2-N, p_3, \ldots, p_k$
$$= p_1-N, p_2, p_3, \ldots, p_k,$$

and so on.

Hence the result is proved generally, and *reduction, modulo N, is a unique process.* This result is true whatever the number of parts may be, even or odd.

By a repetition of this process it is always possible to arrive at a composition free from negative parts, for, on the reduction by the above rule for negative parts, the negative parts which may be introduced, as others are made positive, continually become smaller numerically. Thus from p, q, $-r$, s we get p, $q-r$, r, $s-r$, and, if $q-r$ is negative, $r-q < r$. These parts will ultimately either vanish or become positive. In actual practice it is advisable naturally to subtract N from the largest part.

17. *Successive reduction of a composition of* $2^m\lambda$ *to a composition of* λ.

Any composition of $2^m\lambda$ may, by the above process, be reduced uniquely to a composition of $2^{m-1}\lambda$. This, again, by a repetition of the same process, may be reduced to a composition of $2^{m-2}\lambda$, and so on until, finally, we reach a composition of λ, and the final result is unique. Also the evolute of such a composition when treated in the same way always leads to the evolute of the corresponding composition.

This reduction may be effected by separate stages in the manner just indicated, or it may be effected at one step, or the reduction to the various moduli, $2^{m-1}\lambda$, $2^{m-2}\lambda$, ..., may be made in any order. This is made clear if we retain the zeroes which may arise; then the effect of the reduction to any modulus can be traced throughout all the stages, and it is immaterial from what part this modulus be subtracted.

18. The reverse process may also be performed, *i.e.*, to obtain a composition of $2N$ from a composition of N. Zero or negative parts may be first introduced and the composition transformed in any way according to the preceding rules. Then N is added to any part and the whole composition again transformed until zero and negative parts are eliminated. The reverse process is evidently not unique. Thus 2, 4; 1, 1, 1, 3; 1, 5; and 1, 1, 2, 2 all reduce, modulo 3, to 1, 2.

19. If P belongs to a period of n, $P \pmod N$ will belong to a period of n', a factor of n, and, if $P \pmod N$ belongs to a period of n', P will evolve to a composition belonging to a period containing a multiple of n'.

We have

$$E^n P = P, \qquad (E^n P) \pmod N = E^n \{P \pmod N\} = P \pmod N,$$

and also

$$E^{n'} \{P \pmod N\} = P \pmod N;$$

therefore n is a multiple of n'.

20. *A regular or an even alien composition of* $2N$ *reduces, modulo* N, *to a single part, and, when reduced, modulo* $2N$, *vanishes.*

Consider the composition

$$P = p_1, p_2, p_3, \ldots, p_k, p_1, p_2, \ldots, p_k,$$

where $$\sum_1^k p_\rho = N.$$

We have

$$\begin{aligned}
&p_1-N, p_2, p_3, \ldots, p_k, p_1, p_2, \ldots, p_k \\
&= p_2, p_3, \ldots, p_{k-1}, N-\sum_1^{k-1} p_\rho, \sum_1^k p_\rho - N, p_1, \ldots, p_{k-1}, p_1+p_k-N \\
&= p_2, p_3, \ldots, p_{k-1}, p_k, 0, p_1, p_2, \ldots, p_{k-1}, p_1+p_k-N \\
&= p_1+p_k-N, p_2, p_3, \ldots, p_{k-1}, p_k+p_1, p_2, \ldots, p_{k-1} \\
&= p_2, p_3, \ldots, p_{k-2}, p_{k-1}+p_k+p_1, p_2, \ldots, p_{k-2}, p_{k-1}+p_k+p_1-N.
\end{aligned}$$

Proceeding in this way we get

$$p_1+\sum_r^k p_\rho - N, p_2, p_3, \ldots, p_{r-1}, p_1+\sum_r^k p_\rho, p_2, \ldots, p_{r-1};$$

and, putting $r = 3$,

$$\begin{aligned}
p_1+\sum_3^k p_\rho - N, p_2, p_1+\sum_3^k p_\rho, p_2 &= -p_2, p_2, N-p_2, p_2 \\
&= p_2, 0, N-p_2, 0 \\
&= N.
\end{aligned}$$

Conversely, *P will condense to a single part when reduced, modulo* N, *only if it is regular or an even alien.*

At each step of the reduction, except the last, there can be only one condensation whereby the number of parts is reduced by 2, and the penultimate result must be of the form $p, 0, q, 0$; hence the number of parts must be even, say $2k$. Let p_1 be so chosen that $p_1+\sum_{k+2}^{2k} p_\rho \geqslant N$; then, since the negative part at the end of the series after the r-th step is $p_1+\sum_{2k-r+1}^{2k} p_\rho - N$, there cannot be more than $k-1$ steps. But the number of condensations required up to the second last step is

$$\tfrac{1}{2}(2k-4) = k-2.$$

Hence there must be $k-1$ steps, and one condensation must occur at each step except the last, where there are two.

We have

$$p_1-N,\ p_2,\ \ldots,\ p_{2k}$$
$$= p_2,\ p_3,\ \ldots,\ p_{r-1},\ N-\sum_1^{r-1} p_\rho,\ \sum_1^{r} p_\rho - N,\ p_{r+1},\ \ldots,\ p_{2k-1},\ p_1+p_{2k}-N.$$

In order that condensation may occur we must have

$$\sum_1^{l_1} p_\rho = N$$

for some value of l_1. Also $p_1+\sum_{k+2}^{2k} p_\rho \geqslant N$,

therefore $$\sum_2^{k+1} p_\rho \leqslant N = p_1+\sum_2^{l_1} p_\rho,$$

therefore $$l_1 \leqslant k.$$

We have then as the first step

$$p_1+p_{2k}-N,\ p_2,\ \ldots,\ p_{l_1-1},\ p_{l_1},\ 0,\ p_{l_1+1},\ p_{l_1+2},\ldots,\ p_{2k-1}$$
$$= p_1+p_{2k}-N,\ p_2,\ \ldots,\ p_{l_1-1},\ p_{l_1}+p_{l_1+1},\ p_{l_1+2},\ \ldots,\ p_{2k-1}.$$

For the second step we have

$$p_2,\ p_3,\ \ldots,\ p_{r-1},\ N-\sum_1^{r-1} p_\rho - p_{2k},\ \sum_1^{r} p_\rho + p_{2k} - N,\ p_{r+1},\ \ldots;$$

and for condensation $$\sum_1^{l_2} p_\rho + p_{2k} = N;$$

therefore $$p_{2k} = \sum_{l_2+1}^{l_1} p_\rho \quad \text{and} \quad l_2 < l_1.$$

This gives

$$p_1+p_{2k}+p_{2k-1}-N,\ p_2,\ \ldots,\ p_{l_2-1},\ p_{l_2}+p_{l_2+1},\ p_{l_2+2},\ \ldots,$$
$$p_{l_1-1},\ p_{l_1}+p_{l_1+1},\ p_{l_1+2},\ \ldots,\ p_{2k-2};$$

and, after s steps, we have

$$p_1+\sum_{2k-s+1}^{2k} p_\rho - N,\ p_2,\ \ldots,\ p_{l_s-1},\ p_{l_s}+p_{l_s+1},\ p_{l_s+2},\ \ldots,$$
$$p_{l_1-1},\ p_{l_1}+p_{l_1+1},\ p_{l_1+2},\ \ldots,\ p_{2k-s},$$

with the conditions $$\sum_1^{l_1} p_\rho = N,$$

$$\sum_{l_r+1}^{l_{r-1}} p_\rho = p_{2k-r+2} \quad (r = 2,\ 3,\ \ldots,\ s).$$

Hence $$p_1+\sum_{2k-s+1}^{2k} p_\rho - N = p_{2k-s+1}+p_1+\sum_{l_s+1}^{l_1} p_\rho - N$$

$$= p_{2k-s+1}+p_1-\sum_{1}^{l_s} p_\rho$$

$$= p_{2k-s+1}-\sum_{2}^{l_s} p_\rho.$$

The smallest value of l_s is 2. Let the final value of s be t, so that

$$p_{2k-t+1} \geqslant \sum_{2}^{l_t} p_\rho$$

while $$p_{2k-t+2} < \sum_{2}^{l_{t-1}} p_\rho.$$

Then

$$p_{2k} = \sum_{l_2+1}^{l_1} p_\rho, \quad p_{2k-1} = \sum_{l_3+1}^{l_2} p_\rho, \quad \ldots, \quad p_{2k-t+2} = \sum_{l_t+1}^{l_{t-1}} p_\rho, \quad p_{2k-t+1} \geqslant \sum_{2}^{l_t} p_\rho.$$

Now $$l_t < l_{t-1} < \ldots < l_2 < l_1 \leqslant k.$$

Hence t will be $< k-1$ unless

$$l_{r+1} = l_r - 1 \quad (r = 1, 2, \ldots, t-1),$$

$$l_t = 2,$$

$$l_1 = k.$$

Hence $t = k-1$, and $$l_r = k-(r-1)$$

and $$p_{2k-r+2} = p_{l_{r-1}} = p_{k-r+2},$$

i.e., $$p_s = p_{k+s}.$$

Hence the composition must be regular or an even alien.

21. *An odd alien composition of $2N$ appertaining to $2m$ reduces, modulo N, to an odd alien composition of N appertaining to m.**

Let $Q = p_1, p_2, \ldots, p_t$ repeated $2k+1$ times, or P^{2k+1},

where $$\sum_{1}^{t} p_\rho = 2m \quad \text{and} \quad N = (2k+1)m.$$

$$Q \pmod N = p_t, p_1-N, p_2, \ldots, p_t, P^{2k-1}, p_1, \ldots, p_{t-1}$$

$$= p_t+p_1-N, p_2, \ldots, p_{r-1}, N-\sum_{1}^{r-1} p_\rho, \sum_{1}^{r} p_\rho - N, p_{r+1}, \ldots,$$

$$p_t, P^{2k-1}, p_1, \ldots, p_{t-1}.$$

* This theorem is not essential for what follows.

Put $r = t$, and we get

$$p_t+p_1-N,\ p_2,\ \ldots,\ p_{t-1},\ N-\sum_1^{t-1} p_\rho,\ \sum_1^{t} p_\rho-N,\ P^{2k-1},\ p_1,\ \ldots,\ p_{t-1}$$

$$= p_t+p_1-N,\ p_2,\ \ldots,\ p_{t-1},\ p_t,\ N-2m,\ p_1-(N-2m),\ p_2,\ \ldots,$$

$$p_t,\ P^{2k-2},\ p_1,\ \ldots,\ p_{t-1}.$$

In the same way this becomes

$$p_t+p_1-N,\ p_2,\ \ldots,\ p_t,\ P^{r-1},\ N-2rm,\ p_1-(N-2rm),\ p_2,\ \ldots,$$

$$p_t,\ P^{2k-r-1},\ p_1,\ \ldots,\ p_{t-1},$$

and, putting, $r = k$,

$$p_t+p_1-N,\ p_2,\ \ldots,\ p_t,\ P^{k-1},\ m,\ p_1-m,\ p_2,\ \ldots,\ p_t,\ P^{k-1},\ p_1,\ \ldots,\ p_{t-1}$$

$$= p_t+p_1-N,\ p_2,\ \ldots,\ p_t,\ P^{k-1},\ m,\ P(\mathrm{mod}\ m),\ P^{k-1},\ p_1,\ \ldots,\ p_{t-1}.$$

Again, this becomes

$$p_{t-1}+p_t+p_1-N,\ p_2,\ \ldots,\ p_{r-1},\ N-p_t-\sum_1^{r-1} p_\rho,\ \sum_1^{r} p_\rho-N+p_t,\ p_{r+1},\ \ldots,$$

$$p_t,\ P^{k-1},\ m,\ \ldots,\ p_{t-2},$$

and, putting $r = t-1$,

$$p_{t-1}+p_t+p_1-N,\ p_2,\ \ldots,$$

$$p_{t-2},\ p_{t-1},\ N-2m,\ p_t-(N-2m),\ P^{k-1},\ m,\ P(\mathrm{mod}\ m),\ P^{k-1},\ p_1,\ \ldots,\ p_{t-2},$$

which becomes, as above,

$$p_{t-1}+p_t+p_1-N,\ p_2,\ \ldots,\ p_t,\ P^{r-2},\ p_1,\ \ldots,\ p_{t-1},\ N-2rm,\ p_t-(N-2rm),$$

$$P^{k-r},\ m,\ P\,(\mathrm{mod}\ m),\ P^{k-1},\ p_1,\ \ldots,\ p_{t-2},$$

and, putting $r = k$,

$$p_{t-1}+p_t+p_1-N,\ p_2,\ \ldots,\ p_t,\ P^{k-2},\ p_1,\ \ldots,\ p_{t-1},\ m,\ p_t-m,\ m,\ P\,(\mathrm{mod}\ m),$$

$$P^{k-1},\ p_1,\ \ldots,\ p_{t-2}$$

$$= p_{t-1}+p_t+p_1-N,\ p_2,\ \ldots,\ p_t,\ P^{k-1},\ m-p_t,\ p_t,\ P\,(\mathrm{mod}\ m),\ P^{k-1},\ p_1,\ \ldots,\ p_{t-2}.$$

In the same way we get

$$p_{t-2}+p_{t-1}+p_t+p_1-N,\ p_2,\ \ldots,\ p_t,\ P^{k-1},\ m-p_{t-1}-p_t,\ p_{t-1},\ p_t,\ P\,(\mathrm{mod}\ m),$$

$$P^{k-1},\ p_1,\ \ldots,\ p_{t-3}.$$

Proceeding in this way we get

$$\sum_{t-r}^{t} p_\rho+p_1-N,\ p_2,\ \ldots,\ p_t,\ P^{k-1},\ m-\sum_{t-r+1}^{t} p_\rho,\ p_{t-r+1},\ \ldots,\ p_t,\ P\,(\mathrm{mod}\ m),$$

$$P^{k-1},\ p_1,\ \ldots,\ p_{t-r-1},$$

and, putting $r = t-1$,

$$p_1+\sum_1^t p_\rho - N,\ p_2,\ \ldots,\ p_t,\ P^{k-1},\ m-\sum_2^t p_\rho,\ p_2,\ \ldots,\ p_t,\ P \pmod m,\ P^{k-1}$$

$$= p_1-(N-2m),\ p_2,\ \ldots,\ p_t,\ P^{k-1},\ \{P \pmod m\}^2,\ P^{k-1}.$$

By repeating these series of operations we get again

$$p_1-(N-2rm),\ p_2,\ \ldots,\ p_t,\ P^{k-r},\ \{P \pmod m\}^{2r},\ P^{k-r},$$

and, putting $r = k$,

$$p_1-m,\ p_2,\ \ldots,\ p_t,\ \{P \pmod m\}^{2k} = \{P \pmod m\}^{2k+1},$$

which proves the theorem.

If N is an even multiple of $m = 2km$, $N-2rm$ vanishes when $r = k$, and we get successively

$$p_t+p_1-N,\ p_2,\ \ldots,\ p_t,\ P^{k-1},\ 0,\ P^{k-1},\ p_1,\ \ldots,\ p_{t-1};$$

$$p_{t-1}+p_t+p_1-N,\ p_2,\ \ldots,\ p_t,\ P^{k-2},\ p_1,\ \ldots,\ p_{t-1},\ 0,\ p_t,\ 0,\ P^{k-1},\ p_1,\ \ldots,\ p_{t-2};$$

$$p_1-(N-2m),\ p_2,\ \ldots,\ p_t,\ P^{k-2},\ p_1,\ 0,\ \ldots,\ p_t,\ 0,\ P^{k-1},$$

and ultimately every second part becomes zero, and the whole composition condenses to a single part, as in the case, already considered, § 19, where $k = 1$.

22. *Every composition of* 2^m *is degenerate.*

Let us assume this to be true for compositions of all powers of 2 up to 2^{m-1}, and let P be any composition of 2^m. Then $P \pmod{2^{m-1}}$ is a composition of 2^{m-1}, and, by assumption, it finally evolves to 0. Hence the corresponding evolute of P must be regular, and P therefore degenerates. But all the compositions of 4, viz., 1, 3 and 2, 2 degenerate to 0, hence the result is true generally.

In particular consider the regular composition 2^r, 2^r,

$$2^r,\ 2^r = 2^r\ (1,\ 1) \quad \text{and} \quad E\ (1,\ 1) = 0;$$

therefore
$$E^{2^r}\ (2^r,\ 2^r) = 0,*$$

and
$$E^{2^r-1}\ (2^r,\ 2^r) = 2^{r+1} \text{ ones.}$$

* See below, § 25, II. The equation $E\ (1,\ 1) = 0$ is symbolic. The composition 1, 1 denotes a row of + and − alternately, and on evolution gives − repeated indefinitely, and this is represented by $(0)2$, or, in fact, $(0)\,x$ where x is any positive integer. Evolving again we get a row of + signs alone or x (0), and repeated evolution does not alter this.

23. *Condition that a composition of* $2N$ *should be degenerate.*

If P is degenerate E^kP is regular for some value of k, and

$$\{E^kP\} \pmod N = E^k\{P \pmod N\} = 0.$$

Therefore $P \pmod N$ is an alien composition of N consisting of a composition of a power of 2 repeated. Conversely, if $P \pmod N$ is an alien composition of N appertaining to a power of 2, $E^kP \pmod N$ vanishes, and therefore E^kP is regular and P is degenerate.

It may happen that, while P is not degenerate, $P \pmod N$ is an alien composition of N. Thus, if

$$P = 112116, \quad P \pmod 6 = 112110 = 1212;$$

but P belongs to a period (112116, 1353, 122214, 11111232). The *necessary and sufficient condition that* P *be degenerate is therefore that* N *should be a power of* 2, *or that* $P \pmod N$ *should be an alien appertaining to a power of* 2.

24. *Successive Evolution.*

Let $$P = p_1, p_2, \ldots, p_a$$

be any partition of N. Then

$$EP = p_1-1, 1, p_2-1, 1, \ldots,$$

$$E^2P = p_1-2, 2, p_2-2, 2, \ldots,$$

$$E^3P = p_1-3, 1, 1, 1, p_2-3, 1, 1, 1, \ldots,$$

$$E^4P = p_1-4, 4, p_2-4, 4, \ldots,$$

and, generally, $$E^nP = p_1-n, \{n\}, p_2-n, \{n\}, \ldots,$$

where $\{n\}$ is an odd composition of n obeying the law

$$\{2^m+k\} = \{k\}, 2^m-k, \{k\},$$

for $k < 2^m$.

To prove this, assume first that $\{2^m\} = 2^m$, for $m = r$. Then

$$E^{2^r}P = p_1-2^r, 2^r, p_2-2^r, \ldots,$$

and $$E^{2^{r+1}}P = E^{2^r}.E^{2^r}P = p_1-2^r-2^r, 2^r, 0, 2^r, p_2-2^r-2^r, \ldots$$

$$= p_1-2^{r+1}, 2^{r+1}, p_2-2^{r+1}, \ldots.$$

Hence the assumption is established for all values of m. Then

$$E^{2^m}P = p_1-2^m,\ 2^m,\ p_2-2^m,\ \ldots,$$

and $E^{2^m+k}P = E^k.E^{2^m}P = p_1-2^m-k,\ \{k\},\ 2^m-k,\ \{k\},\ p_2-2^m-k,\ \ldots$

$$= p_1-2^m-k,\ \{2^m+k\},\ p_2-2^m-k,\ \ldots.$$

Hence $$\{2^m+k\} = \{k\},\ 2^m-k,\ \{k\}.$$

Now, if for the sake of brevity we write $[r]$ instead of

$$2^{m_{k-r+1}}-2^{m_{k-r+2}}-\ldots-2^{m_k},$$

then $\{2^{m_1}+2^{m_2}+\ldots+2^{m_k}\}$

$$= [1][2][1]\ldots[1][2][1][3][1][2][1][k][1][2][1][3][1][2][1][4]$$
$$\ldots[1][2][1][k-1][1]\ldots[1][2][1].$$

It thus contains 2^k-1 parts.

The form of $\{n\}$ can be rapidly found by working in the scale of 2. To find $[k]$ subtract n from the next power of 2; to find $[k-1]$ strike off the first significant figure from n on the left and subtract from the next power of 2, and so on. Thus, if $n = 85$, or, in the scale of 2, 1010101;

$$[4] = 101011 = 43,\ [3] = 1011 = 11,\ [2] = 11 = 3,\ [1] = 1;$$

and $$\{85\} = 1,\ 3,\ 1,\ 11,\ 1,\ 3,\ 1,\ 43,\ 1,\ 3,\ 1,\ 11,\ 1,\ 3,\ 1.$$

The process of eliminating negative parts is much more laborious than evolution, so that often the quickest way to obtain any evolute of a composition is to evolve repeatedly.

25. *The operation of doubling a composition.*

Let P be a composition of N, and let each of its parts be doubled. Then we get a composition of $2N$ in which every part is even. Denote this by $2P$.

THEOREM I.— $$E^2(2P) = 2E(P).$$

Let $$P = p,\ q,\ 1^r,\ s,\ \ldots.$$

Then $$EP = p-1,\ 1,\ q-1,\ r+1,\ s-1,\ \ldots,$$

$$2P = 2p,\ 2q,\ r \text{ twos},\ 2s,\ \ldots,$$

$$E.2P = 2p-1,\ 1,\ 2q-1,\ 2r+1 \text{ ones},\ 2s-1,\ \ldots,$$

$$E^2.2P = 2p-2,\ 2,\ 2q-2,\ 2r+2,\ 2s-2,\ \ldots$$

$$= 2.EP.$$

Theorem II.— $E^{2^r}(2^r P) = 2^r . E(P)$.

Assume this to be true for r. Then

$$\begin{aligned} E^{2^{r+1}}(2^{r+1}P) &= E^{2^r}\{E^{2^r}(2^{r+1}P)\} \\ &= E^{2^r}\{2^r E(2P)\} = 2^r . E(E . 2P) \\ &= 2^r . E^2(2P) = 2^r . 2 . EP \\ &= 2^{r+1} . E(P). \end{aligned}$$

Hence the theorem is true generally.

Theorem III.— $2^r . E^s P = E^{s . 2^r} . 2^r P$.

Assume this for s. Then

$$\begin{aligned} 2^r E^{s+1} P &= E^{s . 2^r} . 2^r . EP \\ &= E^{s . 2^r} . E^{2^r} . 2^r P \\ &= E^{(s+1) 2^r} . 2^r P. \end{aligned}$$

Corollaries.—Every alternate evolute of $2P$ has all its parts even.

If P belongs to a period of n, $2P$ will belong to a period of $2n$.

If the r-th evolute of P is pure, the $2r$-th evolute of $2P$ will be pure.

If P is regular, $2P$ is also regular, and if the r-th evolute of P is regular, the $2r$-th evolute of $2P$ will be regular; then the $(r+1)$-th evolute of P is alien and the $(2r+1)$-th evolute of $2P$ will be alien.

26. *Doubling a composition and reducing modulo N.*

Let the combined operation of doubling a composition of N, and at the same time reducing modulo N, be denoted by D, so that

$$DP = 2P \pmod N.$$

Then DP is also a composition of N. In this way we can pass from one composition to another composition of the same number.

Theorems of exactly the same form as I. to III. of the preceding section can be proved in the same way, only reducing the final results modulo N. It is unnecessary to state the theorems, as we have simply to substitute D for 2 in the operator (not in the index).

If N is odd, DP and P contain the same number of parts.

In reducing $p_1, p_2, \ldots$, modulo N, the parts are always of the form p_r or $\pm(p_r+p_s+\ldots-N)$. Hence, since p_r is always even and N is odd, this can never vanish and condensation never occurs.

If N is even, condensation may occur, and DP has all its parts even, for all the numbers which occur at any stage are even.

27. *The reverse process.*

First introduce zero or negative parts and transform by the usual rules until there is not more than one zero or negative part, and (1) if N is even there are no odd parts, (2) if N is odd, only one odd part which may be positive or negative. Then add N to the zero, negative or odd part, or to any part if all the parts are even, and divide each part by 2.

If N is even the reverse process is possible only if all the parts are even, and is evidently not unique, for from $2p$, $2q$, $2r$, $2s$ we get, *e.g.*, $p+\frac{1}{2}N$, q, r, s or p, $q+\frac{1}{2}N$, r, s or p_1, $\frac{1}{2}N$, p_2, q, r, s, and so on, where

$$p_1+p_2 = p.$$

If N is odd the reverse process is always possible and it is unique.

To prove this, we notice that the only transformation available is

$$p,\ q,\ r,\ s = p,\ q+r,\ \bar{r},\ r+s,$$

since the number of parts must remain the same (§ 26).

Since N is odd there must be an odd number of odd parts. If three odd parts come together they may be reduced to one, for, distinguishing an odd number by enclosing it within brackets,

$$(p),\ (q),\ (r),\ \ldots = p+q,\ (\overline{q}),\ r+q,\ \ldots.$$

If two odd parts come together they may, by a succession of steps, be transferred to any other position in the composition.

For,

$$(p),\ (q),\ r,\ s,\ \ldots = p+q,\ (\overline{q}),\ (r+q),\ s,\ \ldots = p+q,\ r,\ (\overline{r+q}),\ (q+r+s),\ \ldots,$$

and so on.

If one odd part occurs by itself, it may be made first to give rise to three, thus

$$p,\ (q),\ r,\ s,\ \ldots = (p+q),\ (\overline{q}),\ (q+r),\ s,\ \ldots.$$

Then either of the pairs which occur together may be moved along the series and the single odd part, say $(p+q)$, has been moved one place in the opposite direction, as

$$(p+q),\ r,\ (\overline{q+r}),\ (q+r+s),\ \ldots.$$

The following process then suffices to eliminate all the odd parts except one. First eliminate all triplets. Then move any pair of odd parts until it comes adjacent to another odd part, producing a triplet which reduces to a single odd part. We are now left with an odd number of isolated odd parts. Suppose there are three odd parts, in positions numbered 1, m, n. Transform the middle one into a triplet and move the pair on the right until it forms a triplet with the third part and eliminate

this triplet. We now have three odd parts in positions 1, $m-1$, $n-1$. Treating the middle one again in the same way, we get three odd parts in positions 1, $m-2$, $n-2$. Proceeding in this way, we get at last the three odd parts in positions 1, 2, $n-m+2$. Then the pair can be moved to the right until it forms a triplet with the third part, and this then reduces to a single odd part. By a repetition of this process we shall finally be left with a single odd part which may be positive or negative, the even parts at any stage being always positive. Then, adding N to this part and dividing all through by 2, we get the required composition.

Now these compositions, in whatever order the processes are performed, are all equivalent, modulo N, and the final result before adding N is always the same. Hence, as there is only one way in which the N may be added, the whole process is unique.

In the following sections 28–30 we shall suppose N to be odd.

28. If a composition of N be multiplied repeatedly by 2, only reducing modulo N when it is possible without introducing negative parts, it will return to itself after p multiplications and not before, where p is the exponent to which 2 appertains (mod N).

For, since $2^p \equiv 1 \pmod{N}$, $x.2^p \equiv x \pmod{N}$,

and, without the introduction of negative parts, it cannot return to its original value before this.

Hence, *for any composition P of N,*

$$D^p P = P.$$

Again, if there exists an index t, such that $2^t \equiv -1 \pmod{N}$, the composition obtained after t multiplications, when reduced repeatedly, modulo N, until the sum of its parts is equal to N, is the same as the original composition, but written in the reverse order.

For, since $2^t \equiv -1 \pmod{N}$, $x.2^t \equiv -x \pmod{N}$,

therefore the composition obtained from

$$p_1,\ p_2,\ \ldots,\ p_k,$$

after t multiplications, can be written

$$\bar{p}_1,\ \bar{p}_2,\ \ldots,\ \bar{p}_k,$$

or, making the sum of the parts $= N = \sum_1^k p_\rho$,

$$\bar{p}_1,\ \bar{p}_2,\ \ldots,\ \bar{p}_{k-2},\ N-p_{k-1},\ N-p_k.$$

This is equal to

$$\begin{aligned}
&p_1,\ -p_1-p_2,\ -p_3,\ \ldots,\ -p_{k-2},\ N-p_{k-1},\ N-p_k-p_1\\
&=-p_2,\ p_1+p_2,\ -p_1-p_2-p_3,\ -p_4,\ \ldots\\
&=\bar{p}_2,\ \bar{p}_3,\ \ldots,\ \bar{p}_{r-1},\ \sum_1^{r-1} p_\rho,\ -\sum_1^{r} p_\rho,\ \bar{p}_{r+1},\ \ldots\\
&=\bar{p}_2,\ \bar{p}_3,\ \ldots,\ \bar{p}_{k-3},\ \sum_1^{k-3} p_\rho,\ -\sum_1^{k-2} p_\rho,\ N-p_{k-1},\ N-p_k-p_1\\
&=\bar{p}_2,\ \bar{p}_3,\ \ldots,\ \bar{p}_{k-2},\ \sum_1^{k-2} p_\rho,\ N-\sum_1^{k-1} p_\rho,\ N-p_k-p_1\\
&=\bar{p}_2,\ \bar{p}_3,\ \ldots,\ \bar{p}_{k-2},\ \sum_1^{k-2} p_\rho,\ p_k,\ N-p_k-p_1.
\end{aligned}$$

In the same way this becomes

$$\begin{aligned}
&\bar{p}_3,\ \ldots,\ \bar{p}_{r-1},\ \sum_2^{r-1} p_\rho,\ -\sum_2^{r} p_\rho,\ \bar{p}_{r+1},\ \ldots\\
&=\bar{p}_3,\ \ldots,\ \bar{p}_{k-3},\ \sum_2^{k-3} p_\rho,\ -\sum_2^{k-2} p_\rho,\ \sum_1^{k-2} p_\rho,\ p_k,\ N-p_k-p_1-p_2\\
&=\bar{p}_3,\ \ldots,\ \bar{p}_{k-2},\ \sum_2^{k-2} p_\rho,\ p_1,\ p_k,\ N-p_k-p_1-p_2;
\end{aligned}$$

and, similarly,

$$\begin{aligned}
&\bar{p}_r,\ \ldots,\ \bar{p}_{k-2},\ \sum_{r-1}^{k-2} p_\rho,\ p_{r-2},\ p_{r-3},\ \ldots,\ p_1,\ p_k,\ N-p_k-\sum_1^{r-1} p_\rho\\
&=\bar{p}_{k-2},\ \sum_{k-3}^{k-2} p_\rho,\ p_{k-4},\ p_{k-5},\ \ldots,\ p_1,\ p_k,\ N-p_k-\sum_1^{k-3} p_\rho\\
&=p_{k-2},\ p_{k-3},\ \ldots,\ p_1,\ p_k,\ p_{k-1}.
\end{aligned}$$

Hence, *if N is such that $2^t \equiv -1$ (mod N), and therefore $2^{2t} \equiv 1$ (mod N), every composition when multiplied t times by 2 and reduced modulo N, gives the enantiomorphic composition, and if it is symmetrical it returns to itself.*

It may happen that when a composition is multiplied by 2 repeatedly, and reduced modulo N *each time*, it will return to itself or give its image after fewer multiplications than t. If it returns after s, so that

$$D^s P = P \text{ or } P',$$

then also

$$D^t P = P \text{ or } P',$$

and s must be a factor of t.

Also it may return to its image after s doublings, although there is no number t such that $2^t \equiv -1 \pmod{N}$. In this case, however, as in the other, s is equal to or a factor of $\frac{1}{2}P$. *E.g.*, 1455 gives 2355, and then 4155; but $p = 4$, and no number t exists for which $2^t \equiv -1 \pmod{15}$. Such an occurrence is evidently dependent upon the form of the composition.

29. If P belongs to a period, DP will also belong to a period, which may be the same period or another; corresponding members of the new period are not in the order of evolution, but each one is the second evolute of the preceding.

Let $DP = P_1$, $DP_1 = P_2$, ..., then $P_s = P$, where s is equal to or a factor of p, the smallest index for which $2^p \equiv 1 \pmod{N}$, and we have a set of s compositions, P, P_1, P_2, ..., P_{s-1}, all with the same number of parts. Now, if P belongs to a period of n, then since no two different compositions give the same result when doubled and reduced, P_1 will belong to a period of n or $2n$. In the same way P_2 will belong to a period of n, $2n$ or $4n$, and the period of P_{s-1} will consist of $2^r \cdot n$, where $r \leqslant s-1$. Since P_{s-1} now returns to P, P's period would contain $2^r \cdot n\,(r \leqslant s)$, but it contains n; hence *each of the periods must contain only n.* The n members of P's period must therefore, when doubled, give all the members of the period of P, and these occur in alternate order, hence *n must be odd.*

We have seen that, if a period contains both of a pair of enantiomorphs, each composition will be accompanied by its image, and the number of members in the period would therefore be even. When N is odd this is therefore impossible and *enantiomorphic periods occur in pairs.* Such periods are *primarily isomorphic, i.e.*, to each composition with a parts in one period corresponds a composition with a parts in the other, and these occupy the same relative positions in the two periods.

30. Let us now examine more carefully the periods generated by P, P_1, ..., P_{s-1}. Let the first period be represented by

$$(0,\ 1,\ 2,\ 3,\ \ldots,\ n-1).$$

Let 0 become 0_1, 1 become 1_1, ..., then the second period is

$$\left\{0_1,\ \left(\frac{n+1}{2}\right)_1,\ 1_1,\ \left(\frac{n+3}{2}\right)_1,\ 2_1,\ \ldots,\ (n-1)_1,\ \left(\frac{n-1}{2}\right)_1\right\}.$$

n is of course odd. Let the symbols of the members of the new period be permuted cyclically and placed below the original period. Then if 0_1 falls under r, 1_1 will fall under $r+2$, ..., s_1 will fall under $r+2s$. Hence

the pair of periods represent a substitution which will contain cycles of the form

$$1,\ r,\ r+2r,\ r+2(r+2r),\ \ldots,$$

i.e.,

$$1,\ r,\ 3r,\ 7r,\ \ldots,\ (2^p-1)r,\ \ldots.$$

Suppose a cycle to contain p, then

$$(2^p-1)r \equiv 1 \pmod{n}.$$

If r is prime to n, this can only be satisfied if

$$2^p \equiv 1 \pmod{n}.$$

Again, we shall have a cycle

$$s,\ r+2s,\ 3r+4s,\ \ldots,\ (2^p-1)r+2^p s,\ \ldots,$$

and, if

$$(2^p-1)r+2^p s \equiv s \pmod{n},$$

$$(2^p-1)(r+s) \equiv 0 \pmod{n},$$

which, if $r+s$ is prime to n, is only possible if

$$2^p \equiv 1 \pmod{n}.$$

If $r+s=n$, *i.e.*, $s=n-r$, s forms a cycle of 1. Hence

If the periods generated by P and DP are the same there is one member of the period, A, such that $DA=A$.

If DP does not belong to the period of P it will belong to another period, and these two periods will be called *secondarily isomorphic*, *i.e.*, if we consider only the number of parts in the compositions, and P's period is denoted by

$$(abc\ldots),$$

where, of course, some of the letters are in general the same, then considering this as representing a substitution, the period of DP will be represented by

$$(abc\ldots)^2.$$

When the two periods are the same a secondary isomorphism is established within the period.

The set of periods generated by P, P_1, ..., P_{s-1} will be called a *conjugate set;* and when the periods generated by P and DP are the same the period will be said to be *self-conjugate.*

If there is an index t, such that $2^t \equiv -1 \pmod{N}$, then $D^tP=P$, if P is symmetrical, and $=P'$ if P is not symmetrical. In the first case the conjugate sets contain t or a factor of t; in the second case they contain $2t$ or an even factor of $2t$, and each set contains pairs of enantiomorphic periods.

If there is no such number t, and $2^p \equiv 1 \pmod{N}$, the number of periods in a conjugate set is p or a factor of p, and the enantiomorphic pairs of periods may occur in the same set if p is even.

When P is symmetrical the set of periods to which it belongs is a *symmetrical* conjugate set.

When P is not symmetrical and the conjugate set does not contain both of a pair of enantiomorphs, we have a pair of *enantiomorphic* conjugate sets. If there is no number t such that $2^t \equiv -1 \pmod{N}$, we may have a pair of enantiomorphic self-conjugate periods.

When P is not symmetrical and the conjugate set contains both of a pair of enantiomorphs there is one conjugate set to which both P and P' belong. Such a set will be called *racemic*.

31. The following theorems will be required in what follows.

THEOREM I.— $p_1-x,\ x,\ p_2-x,\ x,\ \ldots,\ p_a-x,\ x$

$$= p_1-x+kN,\ x-kN,\ p_2-x+kN,\ x-kN,\ \ldots,$$

where $$N = \Sigma p.$$

We have $$p_1-x,\ x,\ p_2-x,\ \ldots$$

$$= x-p_1,\ p_1+p_2-x,\ x-p_2,\ p_2+p_3-x,\ \ldots$$

$$= p_a+p_1+p_2-x,\ x-(p_1+p_2),\ p_1+p_2+p_3-x,\ x-(p_2+p_3),\ \ldots$$

$$= \sum_1^r p_\rho - x,\ x - \sum_2^r p_\rho,\ \sum_2^{r+1} p_\rho - x,\ x - \sum_3^{r+1} p_\rho,\ \ldots.$$

Putting $r = a$, we get

$$N-x,\ x-N+p_1,\ N-x,\ x-N+p_2,\ \ldots$$

$$= x-N,\ p_1-x+N,\ x-N,\ p_2-x+N,\ \ldots.$$

Now assume the theorem for k, then

$$p_1-x+kN,\ x-kN,\ p_2-x+kN,\ x-kN,\ \ldots$$

$$= p_1-x+(k+1)N,\ x-(k+1)N,\ \ldots.$$

Hence the theorem is established.

THEOREM II.— $1^p,\ -x+1,\ 1^q,\ \ldots = 1^{p-x},\ x+1,\ 1^{q-x},\ \ldots.$

We have $1^p,\ -x+1,\ 1^q,\ \ldots$

$$= 1^{p-1},\ -x+2,\ x-1,\ -x+2,\ 1^{q-1},\ \ldots$$

$$= 1^{p-2},\ -x+3,\ x-2,\ -x+3,\ x-2,\ -x+3,\ 1^{q-2},\ \ldots$$

$$= 1^{p-k},\ (-x+k+1,\ x-k)^k,\ -x+k+1,\ 1^{q-k},\ \ldots.$$

Let $k = x$, and we have

$$1^{p-x}, (1, 0)^x, 1, 1^{q-x}, \ldots$$
$$= 1^{p-x}, x+1, 1^{q-x}, \ldots .$$

32. We proceed now to investigate the number of compositions in a period, first in the case where N is odd.

Suppose first that A is a member of a period such that $DA = A$. Then, if $EA = B$,

$$EB = E^2A = E^2DA = DEA = DB,$$
$$E^{2^r}D^rB = D^rEB = D^rDB = D^{r+1}B,$$
$$E^{2^r-1}D^{r-1}B = D^rB,$$
$$\ldots \quad \ldots \quad \ldots \quad \ldots$$

Hence $$D^{r+1}B = E^{\sum_0^r 2^\mu}B = E^{2^{r+1}-1}B.$$

But, if $2^t \equiv \pm 1 \pmod N$, $\quad D^tB = B,$

hence $$E^{2^t-1}B = B.$$

[If $2^t \equiv -1 \pmod N$ A must, of course, be symmetrical.]

Second, if DA_0 is not a member of the same period as A_0, we have a set of isomorphic periods generated by A_0, $DA_0 = A_1$, $D^2A_0 = A_2$, ..., and we have $D^rA_s = A_{r+s}$, where the subscript of A is to be reduced modulo p, p being the exponent to which 2 appertains (mod N).

Let $EA_s = B_s$, then

$$E^{2^r}D^rA_s = D^rEA_s = D^rB_s = E^{2^r}A_{s+r},$$

i.e., $$E^{2^r}A_k = D^rB_{k-r}.$$

Hence $$E^{2^r}D^rB_s = E^{2^r}E^{2^r}A_{s+r} = E^{2^{r+1}}A_{s+r} = D^{r+1}B_{s-1}.$$

Putting in succession $\quad r = r, r-1, \ldots, 0,$

$$s = 1, 2, \ldots, r+1,$$

we get $$D^{r+1}B_0 = E^{\sum_0^r 2^\mu}B_{r+1} = E^{2^{r+1}-1}B_{r+1}.$$

If $2^t \equiv +1 \pmod N$,

$$D^tB_0 = B_0 \quad \text{and} \quad B_t = B_0,$$

therefore $$E^{2^t-1}B_0 = B_0.$$

If $2^t \equiv -1 \pmod{N}$,

$$D^t B_0 = B_0' \quad \text{and} \quad B_t = B_0',$$

therefore $$E^{2^t-1} B_0' = B_0'.$$

Hence every composition of N satisfies the equation

$$E^{2^t-1} P = P.$$

It may happen, however, that $D^s P = P$ or P', where s is a factor of t, and if every member of a period satisfies this equation, then for every member of this period $$E^{2^s-1} P = P.$$

The period of a composition of N is therefore, in general, 2^t-1, where t is the smallest integer satisfying the congruence $2^t \equiv \pm 1 \pmod{N}$. We shall call this the *normal period* of N.

In exceptional circumstances there may be *short periods*, factors of 2^t-1. *E.g.*, 17 has a normal period of 15, but it has also periods of 5. (See Appendix. It is noteworthy that there are periods not of the form 2^n-1. 17 is the smallest number for which such periods exist.)

33. The result $E^{2^t-1} P = P$ can be proved more simply thus. Let

$$P = p_1, p_2, p_3, \ldots .$$

Then
$$\begin{aligned} E^{2^r} P &= p_1-2^r, 2^r, p_2-2^r, 2^r, \ldots \ (\S\ 24) \\ &= p_1-2^r+kN, 2^r-kN, \ldots \ (\S\ 31, \text{I.}). \end{aligned}$$

Now choose $r = t$, so that $2^t \equiv \pm 1 \pmod{N}$, and $2^t = kN \pm 1$. Then we have

$$\begin{aligned} & p_1 \mp 1, \ \pm 1, \ \ldots \\ &= p_1-1, 1, \ldots \text{ for either sign} \\ &= EP. \end{aligned}$$

Hence $$E^{2^t} P = EP \quad \text{and} \quad E^{2^t-1} P = P.$$

This proof, though simpler than that of the last section, does not illustrate the occurrence of short periods of the form 2^s-1.

34. *Short periods.*

If s is a factor of t there may be a short period of 2^s-1. In particular, even if t is prime, there may be short periods of 1. A short period of 1 can only be obtained in the following way. Take a composition of M,

say P, form its first evolute EP, where if p is the first part of P, $p-1$ is the first part of EP. Form the successive evolutes in the same way, and place them consecutively, and we get

$$Q = P, EP, E^2P, \ldots,$$

$$EQ = EP, E^2P, E^3P, \ldots,$$

so that if the series recurs $EQ = Q$.

In this general process negative and zero parts will, of course, arise, and in the general case it is not possible to say whether or at what point the series will recur, without having a method of eliminating zero and negative parts.

Two cases, however, may be noted.

(1) Let $P = 2^r$.

Then we get

$$2^r;\ 2^r-1, 1;\ 2^r-2, 2;\ \ldots;\ 2^r-2^k, 2^k;\ \ldots;\ 2^r-2^{r-1}, 2^{r-1};\ \ldots;$$

$$2^r-2^r+1,\ 2^r-1 \text{ ones},\ 0,\ 2^r,\ \bar{1},\ \ldots$$

which gives $2^r;\ 2^r-1, 1;\ \ldots;\ 2^r-1$ ones.

$(2^r-2^r+1,\ 2^r-1$ ones) is the (2^r-1)-th evolute of 2^r, and

$$N = 2^r.2^r-1 = 2^{2r}-1.$$

Examples of this are 21, 43122111.

(2) Let $P = 2^r+1$.

Then we get

$$2^r+1;\ 2^r, 1;\ 2^r-1, 2;\ \ldots;\ 2^r-2^{r-1}, 1, 2^{r-1}-1, 1;\ \ldots;\ 2,\ 2^r-1 \text{ ones};\ 1$$

and $$N = 2^r(2^r+1)+1 = 2^{2r}+2^r+1.$$

Examples of this are 3211, 5413221111.

35. Now take the case where $N = 2^m\lambda$.

Let

$$P = p_1, p_2, \ldots, p_\alpha.$$

Then

$$E^{2^m}P = p_1-2^m, 2^m, p_2-2^m, 2^m, \ldots.$$

$$E^{2^{m+t}}P = p_1-2^{m+t}, 2^{m+t}, \ldots$$

$$= p_1-2^{m+t}+kN, 2^{m+t}-kN, \ldots.$$

Choose k so that $2^t = k\lambda \pm 1$, then we have

$$2^{m+t} - kN = 2^m(2^t - k\lambda) = \pm 2^m,$$

and $$E^{2^{m+t}} P = p_1 - 2^m,\ 2^m,\ \ldots = E^m P.$$

Hence, if $Q = E^m P$, $$E^{2^m(2^t-1)} Q = Q,$$

and Q belongs to a period of $2^m(2^t-1)$ or a factor of this.* The 2^m-th evolute of any composition of $2^m\lambda$ is therefore pure, and its normal period is $2^m(2^t-1)$.

We shall now show that the (2^m-1)-th is the first pure evolute of an improper composition of $2^m\lambda$.

Any improper composition may be written

$$P = p_1 - 1,\ 1,\ p_2 - 1,\ 1,\ \ldots,\ p_a - 1,\ 1,$$

where a is odd. Then

$$E^{2^m-1} P = E^{2^{m+t}-1} P = p_1 - 2^m,\ 2^m,\ \ldots = E^{2^m(2^t-1)} . E^{2^m-1} P.$$

Now we have to show that the (2^m-2)-th evolute of P, where P is improper, is equal to the first involute, not belonging to the period, of $E^{2^m(2^t-1)} E^{2^m-1} P$, *i.e.*, of $E^{2^{m+t}-1} P$, or that

$$p_1 - 2^m + 1,\ 2^m - 1 \text{ ones},\ p_2 - 2^m + 1,\ 2^m - 1 \text{ ones},\ \ldots$$

$$= p_1 - 2^{m+t} - 1 \text{ ones},\ 2^{m+t} + 1,\ p_2 - 2^{m+t} - 1 \text{ ones},\ 2^{m+t} + 1,\ \ldots,$$

where $\sum_1^a p_\rho = N = 2^m\lambda$ and a is odd.

The right-hand side

$$= 2^{m+t} - p_1 - 1 \text{ ones},\ p_1 + p_2 - 2^{m+t} + 1,\ 2^{m+t} - p_2 - 1 \text{ ones},$$
$$p_2 + p_3 - 2^{m+t} + 1,\ \ldots$$

$$= p_a + p_1 + p_2 - 2^{m+t} - 1 \text{ ones},\ 2^{m+t} - p_1 - p_2 + 1,\ p_1 + p_2 + p_3 - 2^{m+t} - 1 \text{ ones},$$
$$2^{m+t} - p_2 - p_3 + 1,\ \ldots$$

$$= 2^{m+t} - p_a - p_1 - p_2 - 1 \text{ ones},\ p_a + p_1 + p_2 + p_3 - 2^{m+t} + 1,$$
$$2^{m+t} - p_1 - p_2 - p_3 - 1 \text{ ones},\ p_1 + p_2 + p_3 + p_4 - 2^{m+t} + 1,\ \ldots,$$

by alternate application of § 14 and § 31, II.

Continuing in this way we get, since a is odd,

$$2^{m+t} - N - 1 \text{ ones},\ N + p_1 - 2^{m+t} + 1,\ 2^{m+t} - N - 1 \text{ ones},\ N + p_2 - 2^{m+t} + 1, \ldots.$$

* A proof is still wanting for the theorem (if it is true) that the periods of compositions of $2^m\lambda$ are all of the form $2^m p$, where p is a period of a composition of λ; also for the general case of the theorem (true when N is odd) that pairs of enantiomorphs cannot occur in the same period.

Proceeding again in the same way we get

$$N-2^{m+t}+p_a+p_1-1 \text{ ones}, 2^{m+t}-N-p_1+1,$$
$$N-2^{m+t}+p_1+p_2-1 \text{ ones}, 2^{m+t}-N-p_2+1, \ldots$$
$$= 2^{m+t}-N-p_a-p_1-1 \text{ ones}, N-2^{m+t}+p_a+p_1+p_2+1,$$
$$2^{m+t}-N-p_1-p_2-1 \text{ ones}, N-2^{m+t}+p_1+p_2+p_3+1, \ldots$$
$$= 2^{m+t}-2N+p_1-1 \text{ ones}, 2N-2^{m+t}+1, 2^{m+t}-2N+p_2-1 \text{ ones},$$
$$2N-2^{m+t}+1, \ldots$$
$$= 2N-2^{m+t}+p_1-1 \text{ ones}, 2^{m+t}-2N+1, 2N-2^{m+t}+p_2-1 \text{ ones},$$
$$2^{m+t}-2N+1, \ldots$$
$$= 2^{m+t}-2N-p_1-1 \text{ ones}, 2N-2^{m+t}+p_1+p_2+1,$$
$$2^{m+t}-2N-p_2-1 \text{ ones}, \ldots$$
$$= 2^{m+t}-3N-1 \text{ ones}, 3N-2^{m+t}+p_1+1, 2^{m+t}-3N-1 \text{ ones},$$
$$3N-2^{m+t}+p_2+1, \ldots$$

and, for any odd value of r,

$$2^{m+t}-rN-1 \text{ ones}, rN-2^{m+t}+p_1+1, \ldots.$$

Now $$2^{m+t}-rN = 2^m(2^t-r\lambda) = \pm 2^m$$

by properly choosing r.

If $$2^t \equiv +1 \pmod{\lambda},$$

we get 2^m-1 ones, p_1-2^m+1, 2^m-1 ones, $p_2-2^m+1, \ldots.$

If $$2^t \equiv -1 \pmod{\lambda},$$

we get $$-2^m-1 \text{ ones}, p_1+2^m+1, -2^m-1 \text{ ones}, \ldots$$
$$= 2^m-1 \text{ ones}, p_1-2^m+1, 2^m-1 \text{ ones}, \ldots.$$

Hence the theorem is established, and we have the result:

The r-th evolute of an improper composition of $2^m\lambda$ is pure only if $r \not< 2^m-1$, and, conversely, a pure composition of $2^m\lambda$ can be involved 2^m-1 times until it becomes improper. The number of impure involutes of a pure composition is $\sum_0^{2^{m_1}-2} 2^\mu = 2^{2^{m_1}-1}-1$.

36. Now let R be an improper composition of $2^m\lambda$. Then $R \pmod{\frac{1}{2}N}$ is improper and its successive evolutes are impure until $E^{2^{m-1}-1}R \pmod{\frac{1}{2}N}$ which is pure, and all the successive evolutes after this are pure. Let $P = E^{2^{m_1}-1}R$; then P is pure and, if Q is any r-th involute of P, $(r \leqslant 2^{m-1})$, $Q \pmod{\frac{1}{2}N}$ is equal to the pure r-th involute of $P \pmod{\frac{1}{2}N}$, *i.e., all the r-th involutes of a pure composition of $2^m\lambda$, for $r \leqslant 2^{m-1}$, reduce, modulo $2^{m-1}\lambda$, to the same pure composition of $2^{m-1}\lambda$.*

37. Next consider an improper composition, P, of $2^m\lambda$ which evolves to a regular composition, R, and then degenerates.

$R \pmod N$ vanishes and $E^k P \pmod{\frac{1}{2}N}$ is an alien appertaining to a power of 2. (§ 23.)

Now, if P is an improper composition of 2^m, $E^{2^m-1}P = 0$, while $E^{2^m-2}P = 1, 1, \ldots$. To prove this assume the result for m, and let Q be an improper composition of 2^{m+1}. Then $Q \pmod{2^m}$ is an improper composition of 2^m, and $E^{2^m-1}Q \pmod{2^m} = 0$. Therefore $E^{2^m-1}Q$ is regular, and $E^{2^m}Q$ is an improper composition of 2^m repeated. Hence

$$E^{2^m-1}.E^{2^m}Q = E^{2^{m+1}-1}Q = 0.$$

But $E(1, 1) = 0$, hence the result is established.

We have also, if (2^m) denotes a non-alien composition of 2^m,

$$E^{2^{m-1}}(2^m) = (2^{m-1})^2, \qquad E^{2^{m-2}}E^{2^{m-1}}(2^m) = (2^{m-2})^{2^2},$$

and generally $$E^k(2^m) = (2^r)^{2^{m-r}},$$

if $$\sum_{r}^{m-1} 2^\mu \leqslant k < \sum_{r-1}^{m-1} 2^\mu,$$

i.e., if $$2^r > 2^m - 1 - k > 2^{r-1} - 1.$$

We have then $$E^{-k}R \pmod{\tfrac{1}{2}N} = (2^r)^{2^{m-r-1}\lambda},$$

if $$2^{r-1} - 1 < k < 2^r$$

and $$E^{-2^{m-2}-1}R \pmod{\tfrac{1}{2}N} = (2^{m-1})^\lambda,$$

which is improper. Hence

A regular composition of $2^m\lambda$ *can be involved* $2^{m-1}-1$ *times until it becomes improper, and the number of compositions associated with each regular composition is* $1 + \sum_{0}^{2^{m-1}-2} 2^\mu = 2^{2^{m-1}-1}$.

Note that the theorem proved in § 35 is true even for degenerate compositions. Let P be an improper composition of $2^m\lambda$ which degenerates to an irreducible composition of $2^{m-1}\lambda$. Then $E^{2^{m-1}-1}P$ is regular and $E^{2^{m-1}}P$ is an improper composition of $2^{m-1}\lambda$ repeated. Hence $E^{2^{m-1}-1}.E^{2^{m-1}}P$ is a pure composition of $2^{m-1}\lambda$ repeated, *i.e.*, $E^{2^{m-1}}P$ is pure and $E^{2^{m-2}}P$ is impure. Similarly, if P is an improper composition of $2^m\lambda$ which degenerates to an irreducible composition of $2^{m-r}\lambda$, the number of the first pure evolute is

$$2^{m-r}-1+2^{m-r}+2^{m-r+1}+\ldots+2^{m-2}+2^{m-1} = 2^{m-r}-1+2^{m-r}(2^r-1) = 2^m-1.$$

38. *Generating compositions of a period.*

We have seen that, if P belongs to a self-conjugate period, there is

one member A of the period such that $DA = A$. A will be called the *generating composition* of the period.

(i.) To find the generating composition of a self-conjugate period.

Let B be any member of the period and suppose $DB = E^rB$. Let A be the generating composition, so that $DA = A$, and let $B = E^qA$. Let n be the number in the period.

Then
$$DB = DE^qA = E^{2q}DA = E^{2q}A$$
$$= E^rB = E^{r+q}A.$$

Therefore
$$q \equiv r \pmod{n}.$$

Hence
$$A = E^{n-r}B.$$

This holds whether N is odd or even.

(ii.) Let N be odd, and let t be the smallest index for which
$$2^t \equiv \pm 1 \pmod{N}.$$

Then $D^tP = P$ or P'. Let s be the smallest index for which D^sP or its enantiomorph belongs to the period of P. Then
$$D^sE^rP = E^{r\cdot 2^s}D^sP.$$

Hence, if Q is any member of the period of P, D^sQ or its enantiomorph belongs to the period of P. Thus P belongs to a conjugate set of s or $2s$, and s is a factor of t.

Suppose there is a member A such that $D^sA = A$ or A'. Take any other member B. Let $D^sB = E^rB$ or E^rB' and $B = E^qA$.

Then
$$D^sB = D^sE^qA = E^{q\cdot 2^s}D^sA = E^{q\cdot 2^s}A \text{ or } E^{q\cdot 2^s}A'$$
$$= E^rB \text{ or } E^rB'$$
$$= E^{q+r}A \text{ or } E^{q+r}A'.$$

Hence
$$q(2^s-1) \equiv r \pmod{n}.$$

If g is the greatest common measure of 2^s-1 and n, the solution of this congruence gives g values for q. In particular, if the period is normal, $n = 2^t-1$, and s is a factor of t, and in this case q has 2^s-1 values.

The compositions $A = E^{-q}B$ will be called the generating compositions of the period. If $s = t$ every member of the period is a generating composition.

(iii.) Suppose next that $N = 2^m\lambda$, where λ is odd.

DA has all its parts divisible by 2^{s+1} (say, DA is divisible by 2^{s+1}) if A is divisible by 2^s, provided $s < m$. Hence D^sA cannot $= A$ or A' unless A is divisible by 2^m. Then $A = 2^mA_1$, where A_1 is a composition of λ. Then, if $D^sA_1 = A_1$ or A_1', $D^sA = A$ or A'. Corresponding to

a set of s periods of compositions of λ, we have, therefore, a set of s periods of compositions of $2^m\lambda$, and in these periods every 2^m-th member is divisible by 2^m.

Consider now a period in which there are compositions divisible by 2^r but none divisible by 2^{r+1}. Let A be such a composition. Then $D^{m-r}A$ is divisible by 2^m, and, provided D^pA is not alien for any value of p, $D^{m-r}A$ belongs to a period of a set. (It may happen that D^pA is divisible by 2^m where $p < m-r$.)

The periods of $2^m\lambda$ are therefore of the following kinds :—

(1) Belonging to a set. This happens if there are compositions in the period divisible by 2^m.

(2) Such that D^pA belongs to a set.

(3) Such that D^pA is an alien appertaining to $2^{m-1}\lambda$.

In these cases it is always possible to find a generating composition A such that

(1) $D^sA = A$ or A'.

(2) $D^pA = B$, where B is a generating composition.

(3) $D^pA = BB$, where B is a generating composition of $2^{m-1}\lambda$.

To find such a composition.

(1) Let D^sB or its enantiomorph $= E^rB$, and suppose $B = E^qA$, where D^sA or its enantiomorph $= A$. Then

$$D^sB = E^{q(2^s-1)}B = E^rB.$$

Hence $$q(2^s-1) \equiv r \pmod{n}.$$

If the period is normal, $n = 2^m(2^t-1)$, and q is determined as one of 2^s-1 values.

(2) Let D^pB or its enantiomorph $= E^rA$, where $D^sA = A$ or A', and let

$$D^pE^qB = A = E^{q\cdot 2^p}D^pB = E^{q\cdot 2^p+r}A.$$

Hence $$q\cdot 2^p \equiv -r \pmod{n}.$$

r must be divisible by 2^p, and q has 2^p values.

(3) Let D^pB or its enantiomorph $= E^rA\,.\,E^rA$, where D^sA or its enantiomorph $= A$, and let

$$D^pE^qB = AA = E^{q\cdot 2^p}D^pB$$
$$= E^{q\cdot 2^p}(E^rA\,.\,E^rA) = E^{q\cdot 2^p+r}A\,.\,E^{q\cdot 2^p+r}A.$$

Hence $$q\cdot 2^p \equiv -r \pmod{n},$$

and q is determined as before.

II.

Enumeration of Cyclic Compositions.

39. The number of compositions of a number N with R parts has been investigated by MacMahon.* He finds

$$C(N, R) = \frac{(N-1)!}{(R-1)!\,(N-R)!} = \binom{N-1}{R-1}.\dagger$$

He also investigates the number of self-inverse compositions, *i.e.*, those which read the same backwards and forwards, and finds

$$SIC\,(2n, 2r) = SIC\,(2n, 2r-1) = SIC\,(2n-1, 2r-1) = \binom{n-1}{r-1},$$

while

$$SIC\,(2n-1, 2r) = 0.$$

Here we require the number of cyclic compositions of a similar nature. We shall use the notation

$$Cy\,(N, R)$$

for the number of cyclic compositions of N with R parts, $Cy\,(N,$ even) for the number of cyclic compositions with an even number of parts, and $Cy\,(N)$ for the total number of cyclic compositions of N; and when we wish to describe more particularly the nature of the compositions we shall use the following abbreviations :—

σ = symmetrical,	α = alien,
ρ = regular,	δ = degenerate,
π = pure,	ι = improper,

and introduce them into the formula thus

$$Cy\sigma\,(N, R)$$

denoting the number of symmetrical cyclic compositions of N with R parts.

A bar over a symbol, standing for a minus, denotes the negative, as $\bar{\sigma}$ = not symmetrical, $\bar{\delta}$ = irreducible. Also the product of two symbols will denote the logical product, as $\sigma\rho$ = both symmetrical and regular, $\bar{\alpha}\bar{\rho}$ = neither alien nor regular; and the sum of two symbols will denote their logical sum, as $\alpha+\rho$ = either alien or regular.

---

* "Memoir on the Theory of the Compositions of Numbers," *Phil. Trans.*, Vol. CLXXXIV., A (1893), pp. 835–901. This and a second memoir, *Phil. Trans.*, Vol. CCVII., A (1908), pp. 65–134, deal mainly with compositions of multipartite numbers.

† Employing the usual continental notation, equivalent to ${}_{N-1}C_{R-1}$.

40. To find $Cy\sigma(N, R)$.

Take any symmetrical cyclic composition of N with R parts.

If R is odd one part occurs singly, the others in pairs.

If R is even and N is odd two parts (whose sum is odd) occur singly, and in the cyclical order these are opposite one another.

If R is even and N is even there may be two parts (whose sum is even) occurring singly, or they may all occur in pairs.

If we take any symmetrical cyclic composition of $2n+1$ with $2r+1$ parts, and increase the single part by unity, we get a symmetrical cyclic composition of $2n+2$ with $2r+1$ parts, and if we diminish by unity the single part (which is even) in a symmetrical cyclic composition of $2n+2$ with $2r+1$ parts, we get a symmetrical cyclic composition of $2n+1$ with $2r+1$ parts. Hence

$$Cy\sigma(2n+1, 2r+1) = Cy\sigma(2n+2, 2r+1).$$

Again, if we take any symmetrical cyclic composition of $2n+1$ with $2r+1$ parts, and make the pair which is opposite to the single odd part coalesce, we get a symmetrical cyclic composition of $2n+1$ with $2r$ parts, and if we break up into a pair the even part which occurs singly in a symmetrical cyclic composition of $2n+1$ with $2r$ parts, we get a symmetrical cyclic composition of $2n+1$ with $2r+1$ parts. Hence

$$Cy\sigma(2n+1, 2r+1) = Cy\sigma(2n+1, 2r).$$

Next take any symmetrical cyclic composition of $2n+1$ with $2r$ parts. There are two parts, whose sum is odd, occurring singly. If we diminish the greater of these by unity we get a symmetrical cyclic composition of $2n$ with $2r$ parts in which two parts occur singly. But these compositions are not all different. Consider the cyclic composition

$$kabc \ldots k+1 \ldots cba.$$

Subtracting 1 from $k+1$, we get

$$kabc \ldots k \ldots cba.$$

But this is the same as $\quad k \ldots cbakabc \ldots,$

and these have been reckoned distinct unless

$$abc \ldots$$

is a self-inverse composition. But in this case if r is even, so that $abc \ldots$ has a middle part l, the composition is cyclically symmetrical about l, and would therefore arise also from

$$kabc \ldots l \ldots cbakabc \ldots l+1 \ldots cba.$$

Again, if $k = l$, and the composition lying between k and l is self-inverse, and has a middle part m, the composition will be cyclically symmetrical also about this part, and so on; but we see that on any supposition there are only two different numbers about which the composition can be symmetrical, viz., k and l if they are different numbers, and k or l and m if $k = l$. Hence

(1) If r is odd $= 2s-1$, and $n = 2m$ or $2m-1$, the number of cyclic compositions of $2n$ which are given twice is

$$\tfrac{1}{2} \sum_{k=1}^{n-r+1} \{C(n-k, r-1) - SIC(n-k, r-1)\}$$

$$= \tfrac{1}{2} \left\{ \binom{n-1}{r-1} - \binom{m-1}{s-1} \right\}.$$

(2) If r is even $= 2s$, the number given twice is

$$\tfrac{1}{2} \sum_{k=1}^{n-r+1} C(n-k, r-1) = \tfrac{1}{2} \binom{n-1}{r-1}.$$

Further, this process does not give all the cyclic compositions of $2n$ with $2r$ parts. There are others in which all the parts occur in pairs, *e.g.*,

$$k\,abc \ldots \ldots cba\,k.$$

Some of these will have been already included if they can also be considered as symmetrical about a single part. This will happen only if

$$k\,abc \ldots$$

is a self-inverse composition with a middle part, and this requires that r be odd. Hence the number of compositions not included is

(1) If $r = 2s-1$,

$$\tfrac{1}{2} \{C(n, r) - SIC(n, r)\} = \tfrac{1}{2} \left\{ \binom{n-1}{r-1} - \binom{m-1}{s-1} \right\};$$

(2) If $r = 2s$, $\qquad \tfrac{1}{2} C(n, r) = \tfrac{1}{2} \binom{n-1}{r-1}.$

Hence $\qquad Cy\sigma(2n, 2r) = Cy\sigma(2n+1, 2r).$

Now to find these numbers consider a symmetrical cyclic composition of $2n+1$ with $2r+1$ parts. There is a single odd part which may be $1, 3, 5, \ldots, 2(n-r)+1$, and the remainder is a self-inverse composition. Hence

$$Cy\sigma(2n+1, 2r+1) = \sum_{k=0}^{n-r} SIC(2n-2k, 2r) = \binom{n}{r}.$$

So that, finally,

$$Cy\sigma(2n+1,\ 2r+1) = Cy\sigma(2n+1,\ 2r)$$

$$= Cy\sigma(2n+2,\ 2r+1) = Cy\sigma(2n,\ 2r) = \binom{n}{r}.$$

The total number of symmetrical cyclic compositions can now be found

$$Cy\sigma(2n+1,\text{ even}) = \sum_{r=1}^{n}\binom{n}{r} = 2^n-1,$$

$$Cy\sigma(2n+1,\text{ odd}) = \sum_{r=0}^{n}\binom{n}{r} = 2^n,$$

$$Cy\sigma(2n,\text{ even}) = \sum_{r=1}^{n}\binom{n}{r} = 2^n-1,$$

$$Cy\sigma(2n,\text{ odd}) = \sum_{r=0}^{n-1}\binom{n-1}{r} = 2^{n-1},$$

and

$$Cy\sigma(2n+1) = 2^{n+1}-1,$$

$$Cy\sigma(2n) = 3.2^{n-1}-1.$$

These numbers, of course, include aliens.

41. We have next to find $Cy(N, R)$.

(1) If N is a prime there are no alien or regular compositions* and every cyclic composition with R parts gives R ordinary compositions. Hence

$$Cy(N, R) = \frac{1}{R}\binom{N-1}{R-1} = \frac{1}{N}\binom{N}{R},$$

and

$$Cy(N, R) = Cy(N, N-R) = \frac{1}{N}\binom{N}{R}.$$

Therefore

$$Cy(N,\text{ even}) = Cy(N,\text{ odd})$$

$$= \tfrac{1}{2}Cy(N) = \frac{1}{2N}\sum_{R=1}^{N-1}\binom{N}{R}$$

$$= \frac{1}{2N}(2^N-2) = \frac{1}{N}(2^{N-1}-1)$$

* We exclude here the composition with N parts, 1, 1, 1, ...

(2) Suppose now that N is not a prime. Then there may be alien or regular compositions. Consider an alien or regular composition of R parts consisting of S parts repeated, so that $pS = R$. Then, if K is the order of the repeated portion $pK = N$. Hence p is a factor of the highest common factor, G, of R and N. To every value of p there corresponds a certain number of alien or regular compositions, the compositions being regular, according to the definition, only when $p = 2$. Now an alien cyclic composition which appertains to K will only give rise to S different compositions by cyclical permutation. Hence

$$Cy\bar{a}\bar{\rho}(N,R) = \frac{1}{R}\{C(N,R) - \Sigma S.Cy\bar{a}\bar{\rho}(K,S)\},$$

where $K = \frac{N}{p}$, $S = \frac{R}{p}$, and the summation is extended to all values of p which are factors of G, 1 being excluded. This gives

$$Cy\bar{a}\bar{\rho}(N,R) = \frac{1}{N}\binom{N}{R} - \Sigma\frac{1}{p}Cy\bar{a}\bar{\rho}\left(\frac{N}{p}, \frac{R}{p}\right),$$

Also $$Cy\bar{a}\bar{\rho}(N, N-R) = \frac{1}{N}\binom{N}{N-R} - \Sigma\frac{1}{p}Cy\bar{a}\bar{\rho}\left(\frac{N}{p}, \frac{N-R}{p}\right).$$

Since the H.C.F. of N and $N-R$ is the same as that of N and R, and if we assume that

$$Cy\bar{a}\bar{\rho}\left(\frac{N}{p}, \frac{N-R}{p}\right) = Cy\bar{a}\bar{\rho}\left(\frac{N}{p}, \frac{R}{p}\right),$$

for all values of p, we have

$$Cy\bar{a}\bar{\rho}(N, N-R) = Cy\bar{a}\bar{\rho}(N, R).$$

But this is true when N is a prime, therefore it is true generally.

(3) If N is odd there are no regular compositions, and

$$Cy\bar{a}(N, N-R) = Cy\bar{a}(N, R).$$

Also $$Cy\bar{a}(N, \text{even}) = Cy\bar{a}(N, \text{odd}) = \tfrac{1}{2}Cy\bar{a}(N).$$

(4) If N is a power of $2 = 2^m$, there are no aliens with an odd number of parts, and

$$Cy(2^m, R) = \frac{1}{2^m}\binom{2^m}{R},$$

if R is odd. Hence

$$Cy\,(2^m, \text{odd}) = \frac{1}{N}\left\{\binom{N}{1}+\binom{N}{3}+\ldots+\binom{N}{N-1}\right\}$$

$$= \frac{1}{N}\left\{1+\binom{N-1}{1}+\binom{N-1}{2}+\binom{N-1}{3}+\ldots + \binom{N-1}{N-2}+\binom{N-1}{N-1}\right\}$$

$$= \frac{1}{N}\,2^{N-1} = 2^{2^m-m-1}.$$

42. *Number of alien and regular compositions.*

$$Cy\,(a+\rho)\,(N, R) = \Sigma\, Cy\,\bar{a}\,\bar{\rho}\left(\frac{N}{p}, \frac{R}{p}\right),$$

and
$$Cy\,\rho\,(N, 4r+2) = Cy\,\bar{a}\left(\frac{N}{2}, 2r+1\right);$$

hence
$$Cy\,\rho\,(N) = Cy\,\bar{a}\left(\frac{N}{2}, \text{odd}\right).$$

43. *Number of improper compositions.*

(1) If N is divisible by 4, every improper composition of N has two involutes which are regular compositions of $2N$, therefore the number of improper compositions of N is

$$Cy\,\iota(N, \text{even}) = \tfrac{1}{2}\,Cy\,\rho(2N)$$

$$= \tfrac{1}{2}\,Cy\,\bar{a}\,(N, \text{odd}).$$

(2) If N is odd, every composition is improper and gives rise to only one regular composition of $2N$.

(3) If $N = 2\lambda$, where λ is odd, the regular compositions are improper and these give rise to only one regular composition of $2N$. Hence

$$2\,Cy\,\iota\bar{\rho}\,(N, \text{even}) + Cy\,\rho\,(N) = Cy\,\rho(2N) = Cy\,\bar{a}(N, \text{odd})$$

$$= Cy\,\bar{a}(N, \text{even}),$$

where the last expression includes the regular compositions (see next

section); therefore

$$Cy\,\iota\bar{\rho}(N, \text{even}) = \tfrac{1}{2}\,Cy\,\bar{a}\,\bar{\rho}(N, \text{even})$$

$$= \tfrac{1}{2}\,Cy\,\bar{\delta}(N, \text{even}),$$

since, when $N = 2\lambda$, the only compositions which are degenerate are aliens or regular compositions.

44. To prove that $Cy\,\bar{a}(N, \text{even}) = Cy\,\bar{a}(N, \text{odd})$,

the regular compositions being included in the left-hand side.

When N is odd, this equation has been already proved, § 41 (3), for there are no regular compositions. When N is even we have to prove

$$Cy\,\bar{a}(N, \text{odd}) - Cy\,\bar{a}\,\bar{\rho}(N, \text{even}) = Cy\,\rho(N).$$

Assume this to be true for all factors of N. We have, § 41 (2),

$$Cy\,\bar{a}(N, \text{odd}) = \frac{1}{N}\sum_{r=0}^{\frac{1}{2}N-1}\binom{N}{2r+1} - \Sigma\Sigma\frac{1}{p}\,Cy\,\bar{a}\,\bar{\rho}(K, S),$$

where $$\frac{N}{K} = p = \frac{2r+1}{S};$$

and $$Cy\,\bar{a}\,\bar{\rho}(N, \text{even}) = \frac{1}{N}\sum_{r=1}^{\frac{1}{2}N-1}\binom{N}{2r} - \Sigma\Sigma\frac{1}{p'}\,Cy\,\bar{a}\,\bar{\rho}\,(K', S'),$$

where $$\frac{N}{K'} = p' = \frac{2r}{S'};$$

and, § 42, $$Cy\,\rho(N) = Cy\,\bar{a}\left(\frac{N}{2}, \text{odd}\right).$$

Let $N = 2^m\lambda$, where λ is odd. Then p must be odd and can have all values which are factors of λ, 1 being excluded, and S must be odd. p' may have all values which are factors of N, 1 and N being excluded, but if p' is odd, S' must be even.

Hence $$\Sigma\Sigma\frac{1}{p}\,Cy\,\bar{a}\,\bar{\rho}(K, S) = \Sigma\frac{1}{p_1}Cy\,\bar{a}(K, \text{odd}),$$

and $$\Sigma\Sigma\frac{1}{p'}\,Cy\,\bar{a}\,\bar{\rho}\,(K', S') = \Sigma\frac{1}{p_1}\,Cy\,\bar{a}\,\bar{\rho}\,(K, \text{even}) + \Sigma\frac{1}{p_2}\,Cy\,\bar{a}\,\bar{\rho}(K'),$$

where p_1 is odd and p_2 is even.

Now $$Cy\,\bar{a}(N, \text{odd}) - Cy\,\bar{a}(N, \text{even})$$

$$= \frac{1}{N}\left\{\sum_{r=0}^{\frac{1}{2}N-1}\binom{N}{2r+1} - \sum_{r=1}^{\frac{1}{2}N-1}\binom{N}{2r}\right\} + \Sigma\frac{1}{p_1}Cy\,\bar{a}\bar{\rho}(K_1, \text{even})$$

$$+\Sigma\frac{1}{p_2}Cy\,\bar{a}\bar{\rho}(K_2) - \Sigma\frac{1}{p_1}Cy\,\bar{a}(K_1, \text{odd}) - Cy\,\bar{a}\left(\frac{N}{2}, \text{odd}\right)$$

$$= \frac{2}{N} + \sum_{a=1}\sum_{q=1}^{m}\frac{1}{a.2^q}Cy\,\bar{a}\bar{\rho}\left(\frac{N}{a.2^q}\right) + \sum_{q=1}^{m-1}\frac{1}{\lambda.2^q}Cy\,\bar{a}\bar{\rho}\left(\frac{N}{\lambda.2^q}\right)$$

$$-\Sigma\frac{1}{p_1}Cy\,\rho(K_1) - Cy\,\bar{a}\left(\frac{N}{2}, \text{odd}\right) \text{ (by original assumption)}$$

$$= \frac{2}{N} + \sum_{a=1}\sum_{q=1}^{m}\frac{1}{a.2^q}Cy\,\bar{a}\bar{\rho}\left(\frac{N}{a.2^q}\right) + \sum_{q=1}^{m-1}\frac{1}{\lambda.2^q}Cy\,\bar{a}\bar{\rho}\left(\frac{N}{\lambda.2^q}\right)$$

$$-\sum_{a=1}\frac{1}{a}Cy\,\bar{a}\left(\frac{N}{2a}, \text{odd}\right) - \frac{1}{\lambda}Cy\,\bar{a}\left(\frac{N}{2\lambda}, \text{odd}\right),$$

where a is any factor of λ, excluding λ, but including 1.

Now $$\frac{1}{a.2^{q-1}}Cy\,\bar{a}\left(\frac{N}{a.2^q}, \text{odd}\right) - \frac{1}{a.2^q}Cy\,\bar{a}\bar{\rho}\left(\frac{N}{a.2^q}\right)$$

$$= \frac{1}{a.2^q}\left\{Cy\,\bar{a}\left(\frac{N}{a.2^q}, \text{odd}\right) - Cy\,\bar{a}\bar{\rho}\left(\frac{N}{a.2^q}, \text{even}\right)\right\}$$

$$= \frac{1}{a.2^q}Cy\,\rho\left(\frac{N}{a.2^q}\right) \text{ (by original assumption)}$$

$$= \frac{1}{a.2^q}Cy\,\bar{a}\left(\frac{N}{a.2^{q+1}}, \text{odd}\right),$$

provided $q < m$.

Hence, by applying this result successively,

$$\frac{1}{a}Cy\,\bar{a}\left(\frac{N}{2a}, \text{odd}\right) - \sum_{q=1}^{m}\frac{1}{a.2^q}Cy\,\bar{a}\bar{\rho}\left(\frac{N}{a.2^q}\right) = \frac{1}{a.2^m}Cy\,\rho\left(\frac{N}{a.2^m}\right) = 0,$$

since $$\frac{N}{a.2^m} \text{ is odd,}$$

where a is any factor of λ, including 1, but excluding λ. And

$$\frac{1}{\lambda}Cy\,\bar{a}\left(\frac{N}{2\lambda}, \text{odd}\right) - \sum_{q=1}^{m-1}\frac{1}{\lambda.2^q}Cy\,\bar{a}\bar{\rho}\left(\frac{N}{\lambda.2^q}\right) = \frac{1}{\lambda.2^{m-1}}Cy\,\rho\left(\frac{N}{\lambda.2^{m-1}}\right)$$

$$= \frac{2}{N}Cy\,\rho(2) = \frac{2}{N}.$$

Hence $$Cy\bar{a}\,(N, \text{odd}) - Cy\bar{a}\,(N, \text{even}) = 0,$$

with the given assumptions. But this is true for any odd number, hence it is true generally.

When N is a power of 2 the value of $Cy\bar{a}\,(N, \text{even})$ can be found at once by this theorem. For

$$Cy\bar{a}\,(2^m, \text{even}) = Cy\,(2^m, \text{odd})$$
$$= \frac{1}{N}\, 2^{N-1} = 2^{2^m - m - 1}.$$

45. We can now find the whole number of even compositions which are not aliens.

$$Cy\bar{a}\,(N, \text{even}) = Cy\bar{a}\,(N, \text{odd})$$
$$= \frac{1}{N} \sum_{r=0}^{\frac{1}{2}N-1} \binom{N}{2r+1} - \Sigma \frac{1}{p}\, Cy\bar{a}(K, \text{odd})$$
$$= \frac{1}{N}\, 2^{N-1} - \Sigma \frac{1}{p}\, Cy\bar{a}\,(K, \text{odd}),$$

where p is given all odd values which are factors of N, excluding 1.

This forms a reduction formula by which we can calculate the number of compositions of N when we know the number of compositions of factors of N. We may, however, obtain a formula which will be self-contained.

(1) Let $N = 2^m\lambda$, where λ is a prime.

$$Cy\bar{a}\,(N, \text{even}) = \frac{1}{N}\, 2^{N-1} - \frac{1}{\lambda}\, Cy\bar{a}\,(2^m, \text{odd})$$
$$= \frac{1}{N}\, 2^{N-1} - \frac{1}{\lambda}\, \frac{1}{2^m}\, 2^{2^m - 1}$$
$$= \frac{1}{N}\, (2^{N-1} - 2^{N/\lambda - 1}).$$

(2) Let $N = a^p$, where a is an odd prime.

$$Cy\bar{a}\,(a^p, \text{even})$$
$$= \frac{1}{a^p}\, 2^{a^p - 1} - \frac{1}{a}\, Cy\bar{a}\,(a^{p-1}, \text{odd})$$
$$- \frac{1}{a^2}\, Cy\bar{a}\,(a^{p-2}, \text{odd}) - \ldots - \frac{1}{a^{p-1}}\, Cy\bar{a}\,(a, \text{odd}) - \frac{1}{a^p}$$

and $$Cy\bar{a}\,(a^{p-1}, \text{odd}) = \frac{1}{a^{p-1}}\, 2^{a^{p-1} - 1} - \frac{1}{a}\, Cy\bar{a}\,(a^{p-2}, \text{odd}) - \ldots$$
$$- \frac{1}{a^{p-2}}\, Cy\bar{a}\,(a, \text{odd}) - \frac{1}{a^{p-1}};$$

therefore

$$Cy\,\bar{a}(a^p, \text{even}) - \frac{1}{a}\, Cy\,\bar{a}(a^{p-1}, \text{odd})$$
$$= \frac{1}{a^p}\, 2^{a^p-1} - \frac{1}{a}\, Cy\,\bar{a}(a^{p-1}, \text{odd}) - \frac{1}{a^p}\, 2^{a^{p-1}-1};$$

hence $$Cy\,\bar{a}(a^p, \text{even}) = \frac{1}{a^p}\,(2^{a^p-1} - 2^{a^{p-1}-1}) = \frac{1}{N}\,(2^{N-1} - 2^{N/a-1}).$$

(3) Let $N = 2^m ab$, where a, b are different odd primes.

$$Cy\,\bar{a}(N, \text{even}) = \frac{1}{N}\, 2^{N-1} - \frac{1}{a}\, Cy\,\bar{a}(2^m b, \text{odd}) - \frac{1}{b}\, Cy\,\bar{a}(2^m a, \text{odd})$$
$$- \frac{1}{ab}\, Cy\,\bar{a}(2^m, \text{odd})$$
$$= \frac{1}{N}\, 2^{N-1} - \frac{1}{a}\,\frac{1}{2^m b}\,(2^{2^m b-1} - 2^{2^m-1})$$
$$- \frac{1}{b}\,\frac{1}{2^m a}\,(2^{2^m a-1} - 2^{2^m-1}) - \frac{1}{ab}\, 2^{2^m-1}$$
$$= \frac{1}{N}\,(2^{N-1} - 2^{N/a-1} - 2^{N/b-1} + 2^{N/ab-1}).$$

It can now be proved that, if $N = 2^m . a^\alpha b^\beta c^\gamma \ldots$, where a, b, c, ... are different odd primes,

$$Cy\,\bar{a}(N, \text{even}) = \frac{1}{N}\,(2^{N-1} - 2^{N/a-1} - 2^{N/b-1} - \ldots + 2^{N/ab-1} + \ldots - 2^{N/abc-1} - \ldots).$$

We may write this symbolically $\frac{1}{2N}\,[2_\zeta]^{\phi(N)}$,

where $$\phi(N) = N\left(1 - \frac{1}{a}\right)\left(1 - \frac{1}{b}\right)\ldots, \quad \text{and} \quad [x_\zeta]^{a \pm b} = x^a \pm x^b.$$

Then, to find the number of irreducible compositions, we have to subtract the number of degenerate compositions. Each regular composition gives, including itself, $2^{2^{m-1}-1}$ degenerate compositions, § 37, hence

$$Cy\,\delta(2^m\lambda, \text{even}) = 2^{2^{m-1}-1}\, Cy\,\bar{a}(2^{m-1}\lambda, \text{odd})$$
$$= 2^{2^{m-1}-1}\,\frac{1}{2^m\lambda}\,[2_\zeta]^{\phi(2^{m-1}\lambda)},$$

and $$Cy\,\bar{\delta}(2^m\lambda, \text{even}) = \frac{1}{2N}\,\{[2_\zeta]^{\phi(N)} - 2^{\frac{1}{2}N/\lambda}[2_\zeta]^{\phi(\frac{1}{2}N)}\}.$$

The appendix which follows contains a mass of numerical results relating to the number of compositions and the periods for values of N up to 20.

APPENDIX.

I. *Number of Cyclic Compositions and Periods.*

N	$Cy\bar{\alpha}$ (N, even)	$Cy\rho$ (N)	$\frac{1}{2}Cy\bar{\delta\sigma}$ (N, even)	$Cy\bar{\delta\sigma}$ (N, even)	$Cy\pi$ (N, even)	Normal Period	Number of Periods	Short Periods	Number of Short Periods
2	1	1	—	—	—	—	—		
3	1	—	—	1	1	1	1		
4	2	1	—	—	—	—	—		
5	3	—	—	3	3	3	1		
6	5	1	—	4	2	2	1		
7	9	—	1	7	9	7	1	1	2.1
8	16	2	—	—	—	—	—		
9	28	—	7	14	28	7	2+2.1		
10	51	3	12	24	24	6	2+2.1		
11	93	—	31	31	93	31	1+2.1		
12	170	5	56	48	20	4	3+2.1		
13	315	—	126	63	315	63	1+2.2		
14	585	9	232	112	288	14	4+2.8	2	2.2
15	1091	—	484	123	1091	15	8+2.32	1 3	2.1 1+2.1
16	2048	16	—	—	—	—	—		
17	3855	—	1800	255	3855	15	16+2.120	5	3
18	7280	28	3388	476	3626	14	17+2.121		
19	13797	—	6643	511	13797	511	1+2.13		
20	26214	51	12576	960	3264	12	20+2.126		

II. *Generating Compositions of the Periods and Sets of Periods.*

The compositions which are here tabulated are the generating compositions of the periods, and they are arranged in conjugate sets. When N is even DA and DB may belong to the same period or they may be identical, even if A and B belong to two different periods. In this case A is chosen so that DA is a generating composition, and DA is given within square brackets. The compositions in *italics* belong to racemic sets, *i.e.*, sets which contain both enantiomorphs. For example, if $A = 1428$, $DA = 1284$, $D^2A = 2418 = A'$, and this set really consists of four periods. The indices are symbolic, *e.g.*, $2^3 4$ stands for 2224.

$N = 3$. One period of 1 :—12.

$N = 5$. One period of 3 :—$1^3 2$.

$N = 6$. One period of 2 :—24.

$N = 7$. One period of 7 :—$1^5 2$.
A pair of periods of 1 :—$1^2 23$.

$N = 9$. Two periods of 7 :—$1^7 2$; 36.
A pair of periods of 7 :—123^2.

$N = 10$. Two periods of 6 :—$2^3 4$; 13^3 [$2^3 4$].
A pair of periods of 6 :—$1^2 2132$ [$2^3 4$].

$N = 11$. One period of 31 :—$1^9 2$.
A pair of periods of 31 :—$1^2 2124$.

$N = 12$. Three periods of 4 :—48 ; 121323 [48] ; 1353 [2424].
A pair of periods of 4 :—$1^4 2123$ [48].

$N = 13$. One period of 63 :—$1^{11} 2$.
Two pairs of periods of 63 :—$1^4 2^2 1^3 2$, $1^7 312$.

$N = 14$. 4 periods of 14 :—
$2^5 4$; 12121232, 141323, $1^3 21512$, [$2^5 4$].
8 pairs of periods of 14 :—
$1^2 2154$, $123^2 23$, $1^3 362$, $12^2 135$, $12^2 1^2 2^2 3$,
$1^3 3^2 212$, [$2^5 4$].
$1^2 93$, 135^2, [$2^2 46$].
2 pairs of periods of 2 :—
$2^2 46$; $1^2 412^2 12$ [$2^2 46$].

$N = 15$. 8 periods of 15 :—
$1^{13} 2$; 5 10 ; $3^3 6$; 31321212 ;
3 12, 69 ; $1^7 21212$, $1^4 2121^4 2$.
32 pairs of periods of 15 :—
1248 ; 121326 ; 123^4 ; $1^4 231212$;
$3^2 27$, 1563 ; 1212123^2, 13213212 ;
$5^2 14$, 235^2 ; 1428, 1284 ; $1^2 2173$, $1^2 52^2 4$;
$1^2 212512$, $1^3 312^2 4$; $1^3 212^2 12^2$, $1^2 21^3 31^2 3$;
$1^6 2^2 1^3 2$, $1^2 21^3 3$;
1^2 2 11, 2^2 4 7, 1 3 4 7, 1^2 6 7 ;
1^2 4 9, 2^2 8 3, 4^2 1 6, 1 2 5 7 ;
$1^3 3^2 6$, $1^2 2632$, $2^2 13^2 4$, 312513.

One period of 3 :—
$1^{2}6213$.

A pair of periods of 3 :—
$1^{5}421^{2}2$.

A pair of periods of 1 :—
$1^{3}2^{2}134$.

$N = 17$. 16 periods of 15 :—
$1^{15}2$; $1^{2}31^{2}262$; 2393, 6164;
3 14, 6 11, 5 12, 7 10;
$3^{3}8$, 5156, $5^{3}2$, 3437;
$3^{5}2$, 151514, 232325, $3^{2}13^{2}4$.

120 pairs of periods of 15 :—These fall into 30 racemic sets of 8. To save space only one of each will be given.

$2^{2}49$, $2^{2}85$, $4^{2}36$, $3^{2}29$, $3^{2}47$, $7^{2}12$,
1259, 1295, 1529, $3^{4}14$, $3^{3}134$,
$1^{3}3^{2}8$, $1^{3}6^{2}2$, $2^{3}3^{2}5$, $2^{3}5^{2}1$,
$3^{3}1^{2}6$, $3^{3}2^{2}4$, $1^{2}9312$, $1^{2}4146$,
$2^{2}3235$, $2^{2}5251$, $3^{2}1316$, $3^{2}2324$,
$4^{2}2412$, $1^{3}239$, $1^{2}2175$, 121283,
$12^{2}147$, $1^{2}2^{2}1^{2}63$, $1^{2}231216$.

3 periods of 5 :—
21212414; $1^{4}31^{4}2^{3}$, $1^{7}21412$.

$N = 19$. One period of 511 :—
$1^{17}2$.

13 pairs of periods of 511 :—
$1^{3}312152^{2}$; 1 2 5 11, 2 4 10 3, 1 6 4 8;
1^{2} 2 15, 2^{2} 4 11, 4^{2} 8 3, 3^{2} 8 5,
3^{2} 7 6, 1 5 7 6, 5^{2} 7 2, 1 9 5 4, 1^{2} 9 8.

THE SOLUTION OF INTEGRAL EQUATIONS

By A. C. DIXON.

[Received October 10th, 1908.—Read November 12th, 1908.—Revised February 9th, 1909.]

IN a paper by E. Schmidt (*Math. Ann.*, 64) a method of solving integral equations is given which is closely related to one given by me some years ago* for the case of analytical functions; this latter is in the present paper (§ 2) extended to more general functions. The results are not as a rule new,† at any rate in form, but by means of a theorem given by Schmidt it is possible to use directly some of the late results in the theory of Fourier series, and so to remove the restriction of continuity which has often been put upon the functions involved. It appears, in fact, from the work of Lebesgue, referred to by Hobson (*Functions of a Real Variable*, p. 715, footnote), that the results apply at once to all limited summable functions, that is, pending the discovery of an unsummable function, to all known functions which do not become infinite.

1. Take the equation

$$f(x)-\int_0^1 \phi(x, y)\, f(y)\, dy = g(x), \tag{1}$$

where x is a real variable, ranging from 0 to 1, g and ϕ are known functions, and f is the unknown function; the necessary restrictions on the nature of these functions are to be considered later (§ 3). The equation (1) may be regarded as a system of an infinite number of equations with an infinite number of unknowns, namely, the values of $f(x)$ for different values of x.

Let $\int_0^1 \phi(x, y) f(y)\, dy$, which is a function of x derived from $f(x)$ by a certain process, be denoted by $Mf(x)$, so that M is an operator transform-

---

* *Camb. Phil. Trans.*, Vol. XIX., Part 2, pp. 208–210.

† For references see Mr. Bateman's paper, *Proceedings*, Ser. 2, Vol. 4, pp. 90–115. To his list may be added a further paper by Hilbert (*Gött. Nachr.*, 1906), and others by Mercer (*Camb. Phil. Trans.*, 1908), B. Heywood (*Liouville's Journal*, 1908), Schmidt (*Math. Annalen*, 63, 64, 65), Myller-Lebedeff (*Math. Ann.*, 64).

ing f and analogous to a matrix in ordinary algebra. This operation can be repeated, so that we have

$$M^2f(x) = \int_0^1 \phi(x, y)\, Mf(y)\, dy = \int_0^1 \int_0^1 \phi(x, y)\, \phi(y, t) f(t)\, dt\, dy,$$

and so on.

The equation (1) is

$$f(x) - Mf(x) = g(x),$$

from which it follows that

$$Mf(x) - M^2f(x) = Mg(x),$$

since M is distributive, and similarly

$$M^2f(x) - M^3f(x) = M^2g(x), \ \ldots.$$

Hence, by addition,

$$f(x) = g(x) + Mg(x) + M^2g(x) + \ldots + M^ng(x) + M^{n+1}f(x). \tag{2}$$

The last term here will tend to zero as n increases indefinitely, if $f(x)$ is a limited function, and if we know that the greatest value of $Mf(x)$ is, for all functions f, less numerically than e times the greatest value of $f(x)$ where e is < 1. This is the case if

$$\int_0^1 |\, \phi(x, y)\,|^2\, dy < e^2$$

for all values of x, since

$$\left| \int_0^1 \phi(x, y) f(y)\, dy \right|^2 \leqslant \int_0^1 |\, \phi(x, y)\,|^2\, dy \int_0^1 |\, f(y)\,|^2\, dy.$$

Hence, if $\int_0^1 |\, \phi(x, y)\,|^2\, dy < e^2$ for all values of x, (3)

the only solution of (1) in which $f(x)$ is always finite is

$$f(x) = g(x) + Mg(x) + M^2g(x) + \ldots \text{ to } \infty. \tag{4}$$

This is Neumann's method.

For the condition (3) we may substitute the much less exacting one

$$\int_0^1 \int_0^1 |\, \phi(x, y)\,|^2\, dx\, dy\ (= e^2) < 1.*$$

---

* Schmidt, *Math. Ann.*, 64, p. 163.

For $M^n f(x) = \int_0^1 \int_0^1 \dots \phi(x, y_1)\, \phi(y_1, y_2) \dots \phi(y_{n-1}, y_n) f(y_n)\, dy_n \dots dy_1$

$$= \int_0^1 \int_0^1 \phi(x, y_1)\, \phi_{n-1}(y_1, y_n) f(y_n)\, dy_n dy_1,$$

where $\phi_{n-1}(y_1, y_n) = \int_0^1 \int_0^1 \dots \phi(y_1, y_2)\, \phi(y_2, y_3) \dots \phi(y_{n-1}, y_n)\, dy_{n-1} \dots dy_2$

$$= \int_0^1 \phi(y_1, u)\, \phi_{n-2}(u, y_n)\, du.$$

Thus $$\int_0^1 \int_0^1 |\, \phi_{n-1}(y_1, y_n)\,|^2\, dy_n dy_1$$

$$\leqslant \int_0^1 \int_0^1 \int_0^1 \int_0^1 |\, \phi(y_1, u)\, \phi_{n-2}(u, y_n)\, \phi(y_1, v)\, \phi_{n-2}(v, y_n)\,|\, du\, dv\, dy_n\, dy_1$$

$$\leqslant \tfrac{1}{2} \int_0^1 \int_0^1 \int_0^1 \int_0^1 \{\,|\, \phi(y_1, u)\, \phi_{n-2}(v, y_n)\,|^2 + |\, \phi(y_1, v)\, \phi_{n-2}(u, y_n)\,|^2\}\, du\, dv\, dy_n dy_1,$$

which last expression $= e^2 \int_0^1 \int_0^1 |\, \phi_{n-2}(v, y_n)\,|^2\, dv\, dy_n.$

Hence it follows that

$$\int_0^1 \int_0^1 |\, \phi_{n-1}(y_1, y_n)\,|^2\, dy_n dy_1 \leqslant e^{2n-2}.$$

Now $$|\, M^n f(x)\,|^2 \leqslant \int_0^1 \int_0^1 |\, \phi(x, y_1) f(y_n)\,|^2\, dy_n dy_1 \int_0^1 \int_0^1 |\, \phi_{n-1}(y_1, y_n)\,|^2\, dy_n dy_1$$

$$\leqslant e^{2n-2} \int_0^1 |\, \phi(x, y)\,|^2\, dy \int_0^1 |\, f(y)\,|^2\, dy.$$

Thus $M^n f(x)$ tends to zero when n tends to infinity, and the method still holds good.

If $g(x)$ is a limited function, $e^{-n} M^n g(x)$ is finite for all values of n and x, therefore the series (4) is absolutely and uniformly convergent: applying the operation $1 - M$ to it, we see that it satisfies (1).

2. This solution may fail unless

$$\int_0^1 \int_0^1 |\, \phi(x, y)\,|^2\, dx\, dy < 1.$$

In a case of failure we proceed as follows.

We may put $$\phi = \phi_{11} + \phi_{12} + \phi_{21} + \phi_{22},$$

where $\phi_{11} + \phi_{12}$ is the sum of the first n terms of the Fourier sine-series derived from ϕ as a function of x, $\phi_{11} + \phi_{21}$ the sum of the first n terms of

the Fourier sine-series derived from ϕ as a function of y, ϕ_{11} is the sum of the terms in the first n rows and columns of the double sine-series derived from ϕ. That is,

$$\phi_{11}(x, y) = 4 \sum_{p=1}^{n} \sum_{q=1}^{n} \sin p\pi x \sin q\pi y \int_0^1 \int_0^1 \phi(t, u) \sin p\pi t \sin q\pi u \, dt \, du,$$

$$\phi_{12}(x, y) + \phi_{11}(x, y) = 2 \sum_{p=1}^{n} \sin p\pi x \int_0^1 \phi(t, y) \sin p\pi t \, dt,$$

$$\phi_{21}(x, y) + \phi_{11}(x, y) = 2 \sum_{q=1}^{n} \sin q\pi y \int_0^1 \phi(x, u) \sin q\pi u \, du ;$$

the infinite series are not used, but ϕ_{22} is given as

$$\phi - (\phi_{12} + \phi_{11}) - (\phi_{21} + \phi_{11}) + \phi_{11}.$$

Let $g = g_1 + g_2$, $f = f_1 + f_2$ similarly, so that

$$g_1(x) = 2 \sum_{p=1}^{n} \sin p\pi x \int_0^1 g(t) \sin p\pi t \, dt,$$

$$f_1(x) = 2 \sum_{p=1}^{n} \sin p\pi x \int_0^1 f(t) \sin p\pi t \, dt = \sum_{1}^{n} a_p \sin p\pi x, \text{ say.}$$

Then $$\int_0^1 f_2(x) \sin p\pi x \, dx = 0 \quad (p = 1, 2, \ldots, n);$$

and therefore $$\int_0^1 f_2(y) \, \phi_{11}(x, y) \, dy = 0,$$

there being similar results for the products $f_2\phi_{21}$, $f_1\phi_{12}$, $f_1\phi_{22}$. Hence the equation (1) becomes

$$f_1 + f_2 - g_1 - g_2 = \int_0^1 (f_1 + f_2)(\phi_{11} + \phi_{12} + \phi_{21} + \phi_{22}) \, dy$$

$$= \int_0^1 (f_1\phi_{11} + f_1\phi_{21} + f_2\phi_{12} + f_2\phi_{22}) \, dy.$$

Multiply by $\sum_{p=1}^{n} \sin p\pi x \sin p\pi t$, and integrate with respect to x from 0 to 1, and put x for t, then

$$f_1(x) - g_1(x) = \int_0^1 \{f_1(y) \, \phi_{11}(x, y) + f_2(y) \, \phi_{12}(x, y)\} \, dy ; \tag{5}$$

and therefore, by subtraction,

$$f_2(x) - g_2(x) = \int_0^1 \{f_1(y) \, \phi_{21}(x, y) + f_2(y) \, \phi_{22}(x, y)\} \, dy. \tag{6}$$

Now (6) may be written

$$f_2(x)-\int_0^1 \phi_{22}(x, y)\, f_2(y)\, dy = g_2(x)+\int_0^1 \phi_{21}(x, y)\, f_1(y)\, dy$$

$$= g_2(x)+\sum_{p=1}^{n} a_p \int_0^1 \phi_{21}(x, y) \sin p\pi y\, dy, \quad (6a)$$

and gives, by the method of § 1, if

$$\int_0^1\int_0^1 |\, \phi_{22}(x, y)\,|^2\, dx\, dy < 1,$$

$$f_2(x) = (1+M_{22}+M_{22}^2+\ldots)\left\{ g_2(x)+\sum_{p=1}^{n} a_p M_{21} \sin p\pi x \right\},$$

where M_{22}, ... are related to ϕ_{22}, ... as M to ϕ. This may be written

$$f_2(x) = \chi(x)+\sum_{p=1}^{n} a_p \lambda_p(x),$$

where $$\chi(x) = (1+M_{22}+M_{22}^2+\ldots)\, g_2(x),$$

and $$\lambda_p(x) = (1+M_{22}+M_{22}^2+\ldots)\, M_{21} \sin p\pi x.$$

Substituting this value for $f_2(x)$ and $\Sigma a_p \sin p\pi x$ for $f_1(x)$ in (5), we have just n linear equations to determine $a_1, a_2, \ldots, a_n$, since the coefficient of $\sin p\pi x$ must vanish for each value of p. If Δ, the determinant of the coefficients of $a_1, a_2, \ldots, a_n$ in these equations, is not zero, then $a_1, a_2, \ldots$ are determined uniquely, and so is $f(x)$, which is equal to

$$f_1(x)+f_2(x),$$

that is, to $$\chi(x)+\sum_{1}^{n} a_p \{\sin p\pi x+\lambda_p(x)\}.$$

Since the process is reversible, the equations (5), (6) are both satisfied, and the method establishes the existence of a unique solution of (1), namely $f(x)$, subject to the condition $\Delta \neq 0$, and to restrictions on the nature of the functions, which will now be discussed.

3. For the success of the operations in § 1 it is necessary that $Mg(x)$, $M^2g(x)$, ... have meanings, so that $\phi(x, y)\, g(y)$ must be summable in y, $\phi(x, y)\, \phi(y, t)\, g(t)$ in y, t, and so on.

As none but summable functions are known, there appears to be no use here in going behind the assumption that all functions are summable. We shall also suppose the functions g, ϕ limited, and thus the order of integration will be indifferent in repeated integrals. (Hobson, *Functions of a Real Variable*, p. 581.) Also, in § 1, the value found for f will be limited.

Since the functions are limited and summable, the Fourier coefficients in § 2 exist. We need to be able to choose n so that

$$\int_0^1 \int_0^1 |\phi_{22}(x, y)|^2 \, dx \, dy < 1.$$

Now, as n increases without limit,

$$\int_0^1 \int_0^1 |\phi_{22}(x, y)|^2 \, dx \, dy$$

decreases, tending towards a limit, which is, according to Lebesgue's results, 0 in all known cases.*

For the success of the present method it is only necessary that this limit be < 1; this supposition as to the nature of ϕ will be made.

The only further condition to be satisfied is that the determinant Δ do not vanish, and this ensures the existence and uniqueness of the solution. In particular, when $g(x) = 0$, we have $f(x) = 0$.

4. It is important to discuss what happens when $\Delta = 0$. The system of equations given by (5) is

$$\begin{aligned} a_p - 2\int_0^1 g_1(x) \sin px\pi \, dx \\ = 2\Sigma a_q \int_0^1 \int_0^1 \sin px\pi \sin qy\pi \, \phi_{11}(x, y) \, dy \, dx \\ + 2\int_0^1 \int_0^1 \chi(y) \, \phi_{12}(x, y) \sin px\pi \, dy \, dx \\ + 2\Sigma a_q \int_0^1 \int_0^1 \lambda_q(y) \, \phi_{12}(x, y) \sin px\pi \, dy \, dx \quad (p = 1, 2, \ldots, n), \end{aligned}$$

---

* Hobson (*Functions of a Real Variable*, p. 715, note) gives the result for a simple Fourier series; hence, in the present case, if ϕ is real,

$$\int_0^1 \{\phi_{21}(x, y) + \phi_{22}(x, y)\}^2 \, dx$$

tends to zero as n increases, for all values of y. If n is chosen so great that this integral is < 1 for all values of y, we have

$$\int_0^1 \int_0^1 (\phi_{21} + \phi_{22})^2 \, dx \, dy < 1,$$

and still more

$$\int_0^1 \int_0^1 (\phi_{22})^2 \, dx \, dy < 1,$$

since

$$\int_0^1 \phi_{21} \phi_{22} \, dy = 0:$$

the extension to a complex ϕ is immediate.

or $$a_p - 2\Sigma a_q \int_0^1 \int_0^1 \sin px\pi \{\sin qy\pi\, \phi_{11}(x, y) + \lambda_q(y)\, \phi_{12}(x, y)\}\, dy\, dx$$

$$= 2\int_0^1 g_1(x) \sin px\pi\, dx + 2\int_0^1 \int_0^1 \chi(y)\, \phi_{12}(x, y) \sin px\pi\, dy\, dx$$

$$(p = 1, 2, \ldots, n). \quad (7)$$

Here $$\chi(x) = g_2(x) + M_{22} g_2(x) + M_{22}^2 g_2(x) + \ldots,$$

where M_{22} differs from M only in that ϕ_{22} takes the place of ϕ: in what follows M_{12}, M_{11}, M_{21} are used similarly.

If $g(x) = 0$, the second members in (7) are all zero, but since $\Delta = 0$, the equations have a solution, say

$$\beta_1, \beta_2, \ldots, \beta_n.$$

Then, if $$h(x) = \sum_{p=1}^{n} \beta_p \{\sin px\pi + \lambda_p(x)\},$$

we have $$h(x) = Mh(x), \quad (8)$$

so that when $g(x) = 0$, $f(x)$ is not necessarily zero, but may be any multiple of $h(x)$.

To verify (8), put $h_1(x)$, $h_2(x)$ for $\Sigma\beta_p \sin px\pi$ and $\Sigma\beta_p \lambda_p(x)$ respectively. In (7), multiply by $\sin px\pi$ and sum for $p = 1, 2, \ldots, n$, taking $g(x) = 0$; thus, since a_p is replaced by β_p,

$$h_1(x) - \int_0^1 h_1(y)\, \phi_{11}(x, y)\, dy - \int_0^1 h_2(y)\, \phi_{12}(x, y)\, dy = 0,$$

or $$h_1(x) = M_{11} h_1(x) + M_{12} h_2(x). \quad (9)$$

Again, the equation defining $\lambda_p(x)$ is (§ 2)

$$(1 - M_{22})\, \lambda_p(x) = \int_0^1 \phi_{21}(x, y) \sin py\pi\, dy;$$

and therefore $$(1 - M_{22})\, h_2(x) = \int_0^1 \phi_{21}(x, y)\, h_1(y)\, dy,$$

or $$h_2(x) = M_{21} h_1(x) + M_{22} h_2(x). \quad (10)$$

Adding (9), (10), we have (8), since $M_{11} h_2(x)$, $M_{12} h_1(x)$, $M_{21} h_2(x)$, $M_{22} h_1(x)$ are zero.

If all the $(p-1)$-th minors of Δ vanish, but not all its p-th minors, there are exactly p linearly independent sets, such as

$$\beta_1, \beta_2, \ldots, \beta_n,$$

which, when substituted for $\alpha_1, \alpha_2, \ldots, \alpha_n$,

make the first members vanish in the equations (7), and therefore there

are p linearly independent functions such as $h(x)$, satisfying (8). This case is more fully discussed below (§ 8a).

5. Again, if $\Delta = 0$, but its first minors are not all zero, there are n constants $\kappa_1, \kappa_2, \ldots, \kappa_n$, such that if the left sides in (7) are multiplied by them respectively, the sum of the products is zero, and the equations are soluble if the same is true for the right sides, that is, if

$$\int_0^1 g_1(x)\, k_1(x)\, dx + \int_0^1 \int_0^1 \chi(y)\, \phi_{12}(x, y)\, k_1(x)\, dy\, dx = 0, \tag{11}$$

where $$k_1(x) = \sum_{p=1}^{n} \kappa_p \sin px\pi.$$

The second term in (11), when transformed by writing for χ its value $g_2 + M_{22} g_2 + \ldots$, and by reversing the order of integration in each term, may be written

$$\int_0^1 g_2(x)\, k_2(x)\, dx,$$

where $$k_2(x) = \bar{M}_{12} k_1(x) + \bar{M}_{22} \bar{M}_{12} k_1(x) + \bar{M}_{22}^2 \bar{M}_{12} k_1(x) + \ldots,^* \tag{12}$$

the bar indicating what corresponds to the interchange of rows and columns in a finite matrix, so that

$$\bar{M} f(x) = \int_0^1 \phi(y, x) f(y)\, dy.$$

Since the integrals of $g_1 k_2$ and $g_2 k_1$ are zero, we may write (11) as

$$\int_0^1 g(x)\, k(x)\, dx = 0, \tag{13}$$

where $$k(x) = k_1(x) + k_2(x).$$

If, then, $\Delta = 0$, *but its first minors do not all vanish, the equation* (1) *can be solved when the function* $g(x)$ *satisfies the condition*

$$\int_0^1 g(x)\, k(x)\, dx = 0,$$

where $k(x)$ *is a certain function of* x.

If the $(p-1)$-th minors of Δ all vanish, the only difference is that $g(x)$ must satisfy p conditions of this nature.

6. From (12), we have

$$k_2(x) = \bar{M}_{12} k_1(x) + \bar{M}_{22} k_2(x), \tag{14}$$

* The proof of convergency in § 1 applies to this series also.

and another relation is found from the original property of $\kappa_1, \kappa_2, \ldots$, that when the left sides in (7) are multiplied by these quantities, the sum of the products vanishes independently of $a_1, a_2, \ldots$, by putting

$$a_p = \sin px\pi \quad (p = 1, 2, \ldots, n).$$

This result is

$$k_1(x) = \int_0^1 k_1(t)\,\phi_{11}(t, x)\,dt + 2\sum_{q=1}^{n} \sin qx\pi \int_0^1\int_0^1 k_1(t)\,\lambda_q(y)\,\phi_{12}(t, y)\,dy\,dt. \quad (15)$$

The second term on the right in (15) may be written

$$2\Sigma \sin qx\pi \int_0^1 k_1(t)\, M_{12}\lambda_q(t)\,dt,$$

or
$$2\sum_{q=1}^{n}\sum_{r=0}^{\infty} \sin qx\pi \int_0^1 k_1(t)(M_{12}M_{22}^r M_{21} \sin qt\pi)\,dt,$$

or
$$2\sum_{q=1}^{n}\sum_{r=0}^{\infty} \sin qx\pi \int_0^1 \sin qt\pi\,.\,\bar{M}_{21}\bar{M}_{22}^r\bar{M}_{12}k_1(t)\,dt,$$

by reversing the order of the integrations involved, or

$$\sum_{r=0}^{\infty} \bar{M}_{21}\bar{M}_{22}^r\bar{M}_{12}k_1(x),$$

since $\bar{M}_{21}$ applied to any function gives a result of the form

$$\sum_{p=1}^{n} a_p \sin px\pi,$$

a *finite* Fourier series. The second term on the right in (15), is thus no other than

$$\bar{M}_{21}k_2(x),$$

and (15) becomes $$k_1(x) = \bar{M}_{11}k_1(x) + \bar{M}_{21}k_2(x). \quad (16)$$

Adding this to (14), we have $$k(x) = \bar{M}k(x). \quad (17)$$

Hence when $\Delta = 0$, and its first minors do not all vanish, the equations

$$f(x) = Mf(x) \quad \textit{and} \quad f(x) = \bar{M}f(x)$$

can both be satisfied, namely, by the functions $h(x)$, $k(x)$ respectively; the equation

$$f(x) - Mf(x) = g(x)$$

can be satisfied, if

$$\int_0^1 g(x)\,k(x)\,dx = 0,$$

and the solution is not unique on account of an arbitrary added multiple of $h(x)$: similarly the equation*

$$f(x)-\bar{M}f(x)=g(x)$$

can be satisfied, if $$\int_0^1 g(x)\,h(x)\,dx=0,$$

and the solution is not unique on account of an arbitrary added multiple of $k(x)$. If all the $(p-1)$-th minors of Δ, but not all the p-th, vanish, there are p functions in the place of each of the single functions h, k. The assumptions made do not exclude any known limited functions from the scope of the theory. The same may be said of Schmidt's solution.

7. If, treating y as a parameter, we find by the methods of §§ 1, 2, a function ψ satisfying the equation

$$(1-\bar{M})\,\psi(y,x)=\phi(y,x)\quad(\Delta\neq 0),$$

we have, from (1),

$$\begin{aligned}\int_0^1 \psi(y,x)\,g(x)\,dx &= \int_0^1 \psi(y,x)(1-M)f(x)\,dx\\ &= \int_0^1 f(x)(1-\bar{M})\,\psi(y,x)\,dx\\ &= \int_0^1 f(x)\,\phi(y,x)\,dx.\end{aligned}$$

Hence $$\int_0^1 \psi(x,y)\,g(y)\,dy=Mf(x)=f(x)-g(x),$$

and the solution of (1) may be put in the form

$$f(x)=g(x)+\int_0^1 \psi(x,y)\,g(y)\,dy,$$

where ψ, the "solving function," does not depend on g.

If we write x or y as a suffix when the other is to be parametric, we have

$$M_x\phi(x,y)=\bar{M}_y\phi(x,y),$$

and

$$M_x\bar{M}_y\chi(x,y)=\bar{M}_yM_x\chi(x,y),$$

* Of the four events: the vanishing of Δ and the corresponding determinant $\bar{\Delta}$, and the existence of $h(x)$, $k(x)$, the occurrence of any one enables us to conclude that of the other three. All these results are well known.

if $\chi(x, y)$ is limited and summable, so as to allow change of order in the double integral. Then, since

$$(1-\bar{M}_y)\,\psi(x, y) = \phi(x, y),$$

$$(1-\bar{M}_y)(1-M_x)\,\psi(x, y) = (1-M_x)\,\phi(x, y)$$

$$= (1-\bar{M}_y)\,\phi(x, y),$$

and $$(1-M_x)\,\psi(x, y) = \phi(x, y),$$

since a limited solution of such an equation as (1) is unique. Hence ψ is also the solving function for the equation

$$(1-\bar{M})\,f(x) = g(x),$$

whose solution may be written

$$f(x) = g(x)+\int_0^1 \psi(y, x)\,g(y)\,dy.*$$

8. The solution of the equation

$$(1-M)^2 f(x) = g(x) \tag{18}$$

may be carried out either by two applications of the method that has been given, or by a single one with the function $\phi(x, y)$ replaced by

$$2\phi(x, y)-\int_0^1 \phi(x, t)\,\phi(t, y)\,dt.$$

When $\Delta = 0$, a distinction must be made between two cases as follows.

If $$\int_0^1 g(x)\,k(x)\,dx = 0,$$

the equation (1) has a solution, say

$$f(x) = \lambda(x)+ah(x),$$

where a is an arbitrary constant. The equation

$$(1-M)\,f(x) = \lambda(x)+ah(x) \tag{19}$$

has a solution, if $$\int_0^1 \{\lambda(x)+ah(x)\}\,k(x)\,dx = 0,$$

and a can be chosen uniquely so as to satisfy this, if

$$\int_0^1 h(x)\,k(x)\,dx \neq 0,$$

* Plemelj.

In this case, then, the same condition which ensures the solubility of

$$(1-M)f(x) = g(x),$$

ensures that of $$(1-M)^2 f(x) = g(x),$$

and, in fact, of $$(1-M)^p f(x) = g(x), \tag{20}$$

where $p = 3, 4, 5, \ldots$: the solution of (20) contains one arbitrary constant.

On the other hand, if $$\int_0^1 h(x)\,k(x)\,dx = 0, \tag{21}$$

the determination of a fails, and a second condition

$$\int_0^1 \lambda(x)\,k(x)\,dx = 0 \tag{22}$$

is necessary for the solubility of (18).

On account of (21) we are now able to put

$$k(x) = (1-\bar{M})\,k'(x),$$

so that (22) becomes

$$\begin{aligned} 0 &= \int_0^1 \lambda(x)(1-\bar{M})\,k'(x)\,dx \\ &= \int_0^1 k'(x)(1-M)\,\lambda(x)\,dx = \int_0^1 k'(x)\,g(x)\,dx. \end{aligned} \tag{23}$$

The conditions (13) and (23) ensure the solubility of (18), and the solution now contains two arbitrary constants, and has, in fact, a complementary function

$$ah'(x)+a'h(x),$$

where $h'(x)$ is given by $$(1-M)\,h'(x) = h(x),$$

which is soluble on account of (21).

The same conditions, (13) and (23), ensure the solubility of (20), unless

$$\int_0^1 h(x)\,k'(x)\,dx = 0,$$

a condition which may be written

$$\int_0^1 h'(x)\,k(x)\,dx = 0,$$

since these two quantities may be put in the forms

$$\int_0^1 k'(x)(1-M)\,h'(x)\,dx, \qquad \int_0^1 h'(x)(1-\bar{M})\,k'(x)\,dx = 0.$$

Hence the following theorem:—*The number of conditions necessary and sufficient for the solubility of*

$$(1-M)^p f(x) = g(x) \quad is \quad p' \leqslant p,$$

and these conditions are

$$\int_0^1 k^{(r)}(x)\, g(x)\, dx = 0 \quad (r = 0, 1, \ldots, p'-1),$$

where

$$(1-\bar{M})\, k^{(r)}(x) = k^{(r-1)}(x) \quad (r = 1, 2, \ldots, p'-1)$$
$$= 0 \quad (r = 0);$$

if $p' < p$, *it is fixed as the lowest number for which*

$$\int_0^1 h(x)\, k^{(p'-1)}(x)\, dx \neq 0,$$

so that the sequence of functions $k^{(0)}(x)$, $k^{(1)}(x)$, ... *cannot be continued beyond* $k^{(p'-1)}(x)$.

The number of conditions for the solubility of

$$(1-\bar{M})^p f(x) = g(x) \text{ is also } p',$$

and these conditions are $\int_0^1 h^{(r)}(x)\, g(x)\, dx = 0 \quad (r = 0, 1, \ldots, p'-1),$

where

$$(1-M)\, h^{(r)}(x) = h^{(r-1)}(x) \quad (r = 1, 2, \ldots, p'-1)$$
$$= 0 \quad (r = 0).$$

The value of $\int_0^1 h^{(r)}(x)\, k^{(s)}(x)\, dx$ *is the same so long as* $r+s$ *is kept the same.*

8*a*. If all the $(p-1)$-th minors of Δ vanish, but not all its p-th minors, there are, as pointed out in §§ 4–6, two sets of p functions each,

$$h_1, \ h_2, \ \ldots, \ h_p,$$
$$k_1, \ k_2, \ \ldots, \ k_p;$$

each set may be linearly transformed, so that we may suppose

$$\int_0^1 h_i(x)\, k_j(x)\, dx = 0 \quad (i \neq j).$$

Then the solution of the equation (1) is possible, if

$$\int_0^1 g(x)\, k_i(x)\, dx = 0 \quad (i = 1, 2, \ldots, p),$$

and is of the form $f(x) = \lambda(x) + \sum_1^p a_i h_i(x)$.

No further conditions are necessary for the solubility of (18), if

$$\int_0^1 h_i(x)\, k_i(x)\, dx \neq 0 \quad (i = 1, 2, \ldots, p),$$

but for each vanishing integral of this system one condition must be added; suppose the number of vanishing integrals to be q, and the corresponding suffixes 1, 2, ..., q.

Then there will be two sets of q functions each,

$$h'_1,\ h'_2,\ \ldots,\ h'_q,$$

$$k'_1,\ k'_2,\ \ldots,\ k'_q,$$

such that
$$\left.\begin{aligned}(1-M)\, h'_i &= h_i \\ (1-\bar{M})\, k'_i &= k_i\end{aligned}\right\}, \quad (i = 1, 2, \ldots, q),$$

and the new conditions are

$$\int_0^1 g(x)\, k'_i(x)\, dx = 0 \quad (i = 1, 2, \ldots, q).$$

The complementary function in the solution of (18) is

$$\sum_1^q a_i h'_i + \sum_1^p a'_i h_i.$$

Also $\int_0^1 h'_i(x)\, k_j(x)\, dx$ and $\int_0^1 h_i(x)\, k'_i(x)\, dx$

may be supposed to vanish when $j > q$, by fixing the arbitrary multiples of h_j, k_j contained in h'_i, k'_i respectively.

The properties so far stated are not affected when $h_1, h_2, \ldots, h_q$ and $h'_1, h'_2, \ldots, h'_q$, or $k_1, k_2, \ldots, k_q$ and $k'_1, k'_2, \ldots, k'_q$, are subjected to any the same linear transformation, which may be so chosen that

$$\int_0^1 h'_i(x)\, k_j(x)\, dx, \quad \text{which} = \int_0^1 h_i(x)\, k'_j(x)\, dx,$$

is 0, when $i \neq j$, or when $i = j = 1, 2, \ldots, r\ (r \leqslant q)$, and that these integrals do not vanish when $i = j = r+1, r+2, \ldots, q$.

Then r is the number of further conditions necessary for the solubility of

$$(1-M)^s f = g,$$

and these conditions are

$$\int_0^1 g(x)\, k_i''(x)\, dx = 0 \quad (i = 1, 2, \ldots, r),$$

where $$(1-\bar{M})\, k_i'' = k_i'.$$

Since $$\int_0^1 h_i k_j\, dx = 0 \quad (j = 1, 2, \ldots, q),$$

we may alter any, or all, of the functions k_1' by adding $\sum_1^q b_j k_j$, where b_j is arbitrary: hence we may alter k_i'' by adding $\sum_1^q b_j k_j' + \sum_1^p c_j k_j$. Here, when $j = q+1,\ q+2,\ \ldots,\ p$, we may choose c_j, so that

$$\int_0^1 h_j k_i''\, dx = 0,$$

and when $j = r+1, r+2, \ldots, q$, we may choose b_j, so that

$$\int_0^1 h_j k_i''\, dx = 0,$$

and c_j, so that $$\int_0^1 h_j' k_i''\, dx = 0.$$

The values of b_j and c_j, when $j \leqslant r$ are still arbitrary.

Similarly we may suppose

$$\int_0^1 k_j h_i''\, dx = 0 = \int_0^1 k_j' h_i''\, dx \quad (q \geqslant j > r),$$

$$\int_0^1 k_j h_i''\, dx = 0 \quad (j > q).$$

Then, by a simultaneous linear transformation of

$$(k_1, \ldots, k_r)(k_1', \ldots, k_r')(k_1'', \ldots, k_r''),$$

we may make $$\int_0^1 h_i'' k_j\, dx = 0 \quad (i \neq j \text{ or } i = j = 1, 2, \ldots, s)(s \leqslant r),$$

and $$\int_0^1 h_i'' k_i\, dx \neq 0 \quad (i = s+1, s+2, \ldots, r).$$

It is to be remembered that

$$\int_0^1 h_i'' k_j\, dx = \int_0^1 h_i' k_j'\, dx = \int_0^1 h_i k_j''\, dx.$$

There are now functions $$h_i''',\ k_i''' \quad (i = 1, 2, \ldots, s),$$

and k_i''' contains an arbitrary expression

$$\sum_1^r b_j k_j'' + \sum_1^r c_j k_j' + \sum_1^p e_j k_j,$$

in which e_j may be so chosen that

$$\int_0^1 k_i''' h_j dx = 0 \quad (j > q),$$

$$\int_0^1 k_i''' h_j' dx = 0 \quad (q \geqslant j > r),$$

$$\int_0^1 k_i''' h_j'' dx = 0 \quad (r \geqslant j > s),$$

and b_j, c_j, when $j > s$, may be so chosen that

$$\int_0^1 k_i''' h_j dx = \int_0^1 k_i''' h_j' dx = 0.$$

The same treatment may be applied to h_i'''. And so on.

It will be found (§ 11) that this process must stop after a finite number of stages, and when it does so we have two sets of functions in canonical form, each set containing $p+q+r+\ldots$, and every function in each set having a mate in the other set, such that

$$\int_0^1 hk\, dx$$

vanishes when the functions h, k are not mates, and does not vanish when they are. Each set can be divided into sequences, and the order of the functions in any sequence $(h, h', \ldots)$ is the reverse of the order of their mates in the corresponding sequence $(k, k', \ldots)$.

9. The above theory is unchanged, if we put θM in the place of M, where θ is a parametric constant. The method of § 1 gives as the solution of

$$(1-\theta M) f(x) = g(x),$$

$$f(x) = g(x) + \theta M g(x) + \theta^2 M^2 g(x) + \ldots,$$

that is, a power series in θ whose circle of convergency has a radius not less than the square root of the reciprocal of

$$\int_0^1 \int_0^1 |\phi(x, y)|^2 \, dx\, dy\,;$$

hence $f(x)$ is an analytical function of the complex variable θ, at least within this circle.

If θ lies outside this circle, the method of § 2 has to be used, and $\chi(x)$, $\lambda_p(x)$ are analytical functions of θ within a wider circle, whose radius increases with n: there is no superior limit to this radius if

$$\lim_{n=\infty} \int_0^1 \int_0^1 |\phi_{22}|^2 \, dx \, dy = 0,$$

which assumption does not exclude any known functions. Thus Δ and also Δf are functions of θ without singularity within this wider circle, and the singularities of f, for finite values of θ, are all poles, possibly of different orders, at the zeros of Δ: except in the domain of such a zero f is an analytical function of θ.

10. Let θ_1 be a zero of Δ and $h(x)$, $k(x)$ the associated functions, as before. Let the expansion of $\Delta f(x)$ in the domain of θ_1 be

$$\lambda(x)+(\theta-\theta_1)\lambda_1(x)+(\theta-\theta_1)^2\lambda_2(x)+\ldots.$$

Then $-\lambda(x)$ is equal to the determinant got when $\theta=\theta_1$ by bordering Δ with an $(n+1)$-th column consisting of the right sides of (7), and an $(n+1)$-th row in which the p-th member is $\sin px\pi+\lambda_p(x)$; hence $\lambda(x)$ cannot vanish independently of $g(x)$ unless all the first minors of Δ are zero: for instance, when $g(x)=\sin px\pi$, the value of $2\int_0^1 \lambda(x)\sin qx\pi\, dx$ is the minor got by leaving out the p-th row and q-th column: suppose then that these minors do not all vanish.

From the expansion

$$\Delta f(x) = \lambda(x)+(\theta-\theta_1)\lambda_1(x)+\ldots \tag{23'}$$

we get, by the operation $1-\theta M$,

$$\Delta g(x) = (1-\theta M)\lambda(x)+(\theta-\theta_1)(1-\theta M)\lambda_1(x)+\ldots. \tag{24}$$

Here put $\theta=\theta_1$, so that $\Delta=0$; then

$$(1-\theta_1 M)\lambda(x)=0,$$

that is, $\lambda(x)=ah(x)$, where a is some constant and is not zero. Also

$$(1-\theta M)\lambda(x)=\left(1-\frac{\theta}{\theta_1}\right)\lambda(x).$$

In (24), multiply by $k(x)$ and integrate. Thus

$$\Delta \int_0^1 g(x)\, k(x)\, dx$$

$$= \left(1 - \frac{\theta}{\theta_1}\right) a \int_0^1 h(x)\, k(x)\, dx + (\theta - \theta_1) \int_0^1 k(x)\,(1 - \theta M)\, \lambda_1(x)\, dx + \ldots. \quad (25)$$

The integral last written

$$= \int_0^1 \lambda_1(x)\,(1 - \theta \bar{M})\, k(x)\, dx = \left(1 - \frac{\theta}{\theta_1}\right) \int_0^1 \lambda_1(x)\, k(x)\, dx.$$

So for the later terms: all terms on the right in (25) contain the factor $(\theta - \theta_1)^2$, except the first term. Thus, unless

$$\int_0^1 h(x)\, k(x)\, dx = 0,$$

the zero of Δ is a simple one, and $\Delta^{-1}\lambda(x)$, the first term in the expansion of $f(x)$ in ascending powers of $\theta - \theta_1$, is

$$\frac{h(x)}{1 - \dfrac{\theta}{\theta_1}} \frac{\displaystyle\int_0^1 g(x)\, k(x)\, dx}{\displaystyle\int_0^1 h(x)\, k(x)\, dx},$$

that is, $f(x)$ has a simple pole with the residue indicated.

11. When the first minors of Δ all vanish or

$$\int_0^1 h(x)\, k(x)\, dx = 0,$$

the case is more complicated. Suppose that, when $\theta = \theta_1$, all the $(p-1)$-th minors of Δ vanish, but not all the p-th; then we can choose $n-p$ of the equations (7) whose left sides will be linearly independent when $\theta = \theta_1$. Using these, we can reduce the other p equations so that the left sides will vanish when $\theta = \theta_1$, and will therefore have $\theta - \theta_1$ as a factor: this factor will not enter on the right unless $g(x)$ is restricted. When this factor is taken out from the left sides, the results may or may not be linearly independent of each other and of the former $n-p$ expressions when $\theta = \theta_1$; if they are not, then some of them may be reduced so as to contain the factor $\theta - \theta_1$ again, and so on. In this way the equations (7) can be replaced by a set in which $n-p$ of the left sides do not vanish when $\theta = \theta_1$,

p_1 of the left sides contain the factor $\theta - \theta_1$,

p_2 " " " $(\theta - \theta_1)^2$,

p_3 " " " $(\theta - \theta_1)^3$,

and so on, and $p_1+p_2+p_3+\ldots = p$. After these factors have been taken away, the expressions are linearly independent when $\theta = \theta_1$: also, no linear combination of the right sides, with constant coefficients, vanishes independently of $g(x)$.

Hence Δ contains $\theta-\theta_1$ to the power $p_1+2p_2+3p_3+\ldots$ and the expression for $f(x)$ will contain fractional terms with powers of $\theta-\theta_1$ in the denominator, and may be written

$$\frac{\mu_1(x)}{\theta-\theta_1}+\frac{\theta\mu_2(x)}{(\theta-\theta_1)^2}+\ldots+\frac{\theta^{\alpha-1}\mu_\alpha(x)}{(\theta-\theta_1)^\alpha}+\mu(x,\theta),$$

where μ_1, μ_2, ... do not involve θ and μ does not become infinite when $\theta = \theta_1$.

Hence

$$\begin{aligned} g(x) &= (1-\theta M) f(x) \\ &= \Sigma \frac{\theta^{q-1}}{(\theta-\theta_1)^q}(1-\theta M)\mu_q(x)+(1-\theta M)\mu(x,\theta) \\ &= \Sigma\left[\frac{\theta^q}{(\theta-\theta_1)^q}\left(\frac{1}{\theta_1}-M\right)\mu_q(x)-\frac{\theta^{q-1}}{(\theta-\theta_1)^{q-1}}\frac{1}{\theta_1}\mu_q(x)\right]+(1-\theta M)\mu(x,\theta). \end{aligned} \tag{26}$$

Since the residues here must vanish, we have

$$(1-\theta_1 M)\mu_\alpha(x) = 0, \tag{27}$$

$$(1-\theta_1 M)\mu_q(x) = \mu_{q+1}(x) \quad (q = 1, 2, \ldots, \alpha-1). \tag{28}$$

Thus
$$\mu_q(x) = (1-\theta_1 M)^{q-1}\mu_1(x), \tag{29}$$

and $\mu_1(x)$ is destroyed by the operator $(1-\theta_1 M)^\alpha$; it is therefore a linear combination of the functions h, h', h'', ... of § 8a and since

$$(1-\theta_1 M)^{\alpha-1}\mu_1(x) = u_\alpha(x)$$

and does not vanish, α cannot exceed the number of members in the longest associated sequence.*

The equation (26) now becomes

$$g(x)+\mu_1(x)/\theta_1 = (1-\theta M)\mu(x,\theta). \tag{30}$$

Since the left side does not involve θ,

$$(1-\theta M)\mu(x,\theta) = (1-\theta_1 M)\mu(x,\theta_1),$$

---

* That is, a sequence of functions h, h', h'', ... associated with θ_1, such that

$$(1-\theta_1 M)h = 0, \qquad (1-\theta_1 M)h' = h,$$

and so on as in § 8.

whence it follows that $\mu(x, \theta) = (1-\theta_1 M)\,\mu'(x, \theta)$,

where $\mu'(x, \theta) = \{\theta_1 \mu(x, \theta_1) - \theta\mu(x, \theta)\}/(\theta_1 - \theta)$,

and does not become infinite when $\theta = \theta_1$.

Hence

$$g(x)+\mu_1(x)/\theta_1 = (1-\theta M)(1-\theta_1 M)\,\mu'(x, \theta) = (1-\theta_1 M)^2\,\mu'(x, \theta_1)$$

similarly, and this again may be written

$$(1-\theta M)(1-\theta_1 M)^2\,\mu''(x, \theta),$$

where $\mu''(x, \theta) = \{\theta_1 \mu'(x, \theta_1) - \theta\mu'(x, \theta)\}/(\theta_1 - \theta)$.

This process can be carried on indefinitely, so that the equation

$$(1-\theta_1 M)^p f(x) = g(x)+\mu_1(x)/\theta_1$$

is soluble for all positive integral values of p. The conditions for this were given in § 8*a*, and enable us to find $\mu_1(x)$: then $\mu_q(x)$ is given by (29) and the residues in $f(x)$ are completely determined.

In particular, if g has the value $h^{(q)}$, belonging to a sequence $h, h', h'', \ldots$, we have

$$\mu_1 = -\theta_1 h^{(q)}, \quad \mu_2 = -\theta_1 h^{(q-1)}, \quad \ldots, \quad \mu_{q+1} = -\theta_1 h :$$

thus α is at least $q+1$, that is, the longest sequence cannot have more than α members: it has been proved already that it cannot have fewer, and hence α is the number of members in the longest sequence. Since α must be finite, so must all the sequences be.

If the sequences are in canonical form and that to which $h^{(q)}$ belongs contains β members, $\mu_1(x)$ must in general contain the term

$$-\theta_1 h^{(q)}(x) \int_0^1 g(x)\, k^{(\beta-q-1)}(x)\,dx \Big/ \int_0^1 h^{(q)}(x)\, k^{(\beta-q-1)}(x)\,dx.$$

The part of $f(x)$ that becomes infinite when $\theta = \theta_1$ is then the aggregate of such expressions as

$$-\frac{\int_0^1 g(x)\, k^{(\beta-q-1)}(x)\,dx}{\int_0^1 h^{(q)}(x)\, k^{(\beta-q-1)}(x)\,dx} \times \left[\frac{\theta_1 h^{(q)}(x)}{\theta-\theta_1} + \frac{\theta\theta_1 h^{(q-1)}(x)}{(\theta-\theta_1)^2} + \frac{\theta^2\theta_1 h^{(q-2)}(x)}{(\theta-\theta_1)^3} + \ldots + \frac{\theta^q\theta_1 h(x)}{(\theta-\theta_1)^{q+1}}\right],$$

*there being one such for every member of every sequence.**

* This form was substantially given by me (*Camb. Phil. Trans.*, Vol. XIX., Part 2, p. 203). Compare also Plemelj (*Monatshefte f. Math. u. Physik*, 1904), and the papers of Mercer and Heywood.

12. The expression in square brackets is the value of $f(x)$ that satisfies (1) when $g(x)$ has the value $-h^{(q)}(x)$, and this is true even when θ has another of the values for which Δ vanishes, say θ_2. Thus the equation

$$(1-\theta_2 M) f(x) = h^{(q)}(x)$$

is soluble for all the values of q, and, as its solution involves only the functions of the sequence,

$$(1-\theta_2 M)^2 f(x) = h^{(q)}(x)$$

is also soluble, and in general so is

$$(1-\theta_2 M)^p f(x) = h^{(q)}(x).$$

Hence, if k_2, k_2', ... is a sequence of functions associated with θ_2, we have

$$\int_0^1 h^{(q)}(x)\, k_2^{(r)}(x)\, dx = 0$$

for all the values of q, r.

The determination of the zeros of Δ and the associated sequences of functions corresponds exactly to the reduction of an algebraic matrix to its canonical form, for we have

$$\theta_1 M h(x) = h(x), \qquad \theta_1 \bar{M} k(x) = k(x),$$
$$\theta_1 M h'(x) = h'(x) - h(x), \qquad \theta_1 \bar{M} k'(x) = k'(x) - k(x),$$
$$\theta_1 M h''(x) = h''(x) - h'(x), \qquad \text{and so on.}$$
$$\text{and so on;}$$

13. As functions of the complex variable θ, whose singularities in the finite part of the plane are known, $f(x)$ and the solving function* $\psi(x, y)$ can often be expressed in series of partial fractions, with possibly an added integral function.

When there are only poles of the first order the expansions are in the simplest case

$$\Sigma \alpha_r \theta_r h_r(x)/(\theta_r - \theta) \quad \text{and} \quad \Sigma A_r h_r(x)\, k_r(y)/(\theta_r - \theta),$$

where
$$A_r = 1 \Big/ \int_0^1 h_r(x)\, k_r(x)\, dx$$

and
$$\alpha_r = A_r \int_0^1 g(x)\, k_r(x)\, dx.$$

---

* ψ is given by the equation $(1-\theta M_x)\,\psi(x, y) = \phi(x, y)$

and is such that
$$f(x) = g(x) + \theta \int_0^1 \psi(x, y)\, g(y)\, dy.$$

For the particular value 0 of θ we have

$$g(x) = \Sigma a_r h_r(x), \qquad \phi(x, y) = \Sigma A_r h_r(x)\, k_r(y)/\theta_r$$

if the expansions are valid. This question is too wide* to be treated in an appendix to a discussion on integral equations, but a few remarks may be made without any claim to novelty.

If the expansion $g(x) = \Sigma a_r h_r(x)$ holds, and may be integrated term by term, then, since

$$\begin{aligned}(\theta_r - \theta) &\int_0^1 h_r(y)\, \psi(x, y)\, dy \\ &= \theta_r \int_0^1 \psi(x, y)\,(1 - \theta M_y)\, h_r(y)\, dy = \theta_r \int_0^1 h_r(y)\,(1 - \theta \bar{M}_y)\, \psi(x, y)\, dy \\ &= \theta_r \int_0^1 h_r(y)\, \phi(x, y)\, dy = h_r(x),\end{aligned}$$

we have
$$\begin{aligned}f(x) &= g(x) + \theta \Sigma a_r \int_0^1 h_r(y)\, \psi(x, y)\, dy \\ &= g(x) + \theta \Sigma a_r h_r(x)/(\theta_r - \theta) = \Sigma a_r \theta_r h_r(x)/(\theta_r - \theta).\end{aligned}$$

On the other hand, if the expansion

$$\phi(x, y) = \Sigma A_r h_r(x)\, k_r(y)/\theta_r$$

holds and may be integrated term by term, we have, by the same method,

$$\psi(x, y) = \Sigma A_r h_r(x)\, k_r(y)/(\theta_r - \theta)$$

and
$$\begin{aligned}f(x) &= g(x) + \theta \Sigma A_r h_r(x) \int_0^1 g(y)\, k_r(y)\, dy/(\theta_r - \theta) \\ &= g(x) + \theta \Sigma a_r h_r(x)/(\theta_r - \theta).\end{aligned}$$

Again, if the series $\Sigma a_r h_r(x)$ converges and may be integrated term by term, but its sum is not $g(x)$, the series $\Sigma a_r \theta_r h_r(x)/(\theta_r - \theta)$ will also converge, since it may be written

$$\Sigma a_r h_r(x) + \theta \int_0^1 \{\Sigma a_r h_r(y)\}\, \psi(x, y)\, dy.$$

Thus
$$f(x) - \Sigma a_r \theta_r h_r(x)/(\theta_r - \theta)$$

is an integral function of θ and equal to a series of ascending powers of θ convergent in all the plane. The operation $1 - \theta M$ upon this expression gives the result $g(x) - \Sigma a_r h_r(x)$, say $g'(x)$, and the series must be

$$g'(x) + \theta M g'(x) + \theta^2 M^2 g'(x) + \ldots,$$

so that, as n increases, $M^n g'(x)$ must ultimately decrease faster than the n-th power of any fraction whatever.

---

* It includes the whole theory of Fourier's series.

14. *Example I.*—Let

$$\phi(x, y) = F(x-y)-F(x+y),$$

where F is a function such that

$$F(x) = F(-x) = F(x+2),$$

and therefore $$F(1-x) = F(1+x).$$

Then

$$M \sin p\pi x = \int_0^1 \phi(x, y) \sin py\pi \, dy$$

$$= \int_{-x}^{1-x} F(y) \sin p(y+x)\pi \, dy - \int_x^{1+x} F(y) \sin p(y-x)\pi \, dy,$$

and, since $$\int_{-x}^{0} F(y) \sin p(y+x)\pi \, dy = \int_0^x F(y) \sin p(x-y)\pi \, dy$$

and $$\int_1^{1+x} F(y) \sin p(y-x)\pi \, dy = \int_{1-x}^1 F(2-y) \sin p(2-y-x)\pi \, dy,$$

this expression becomes

$$\int_0^1 F(y) \{\sin p(y+x)\pi - \sin p(y-x)\pi\} \, dy$$

or $$2 \sin p\pi x \int_0^1 F(y) \cos p\pi y \, dy;$$

therefore $\sin p\pi x$ is associated with a zero of Δ,* when n is great enough (§ 2).

Thus on account of the symmetry of $\phi(x, y)$ the two series of functions h, k are in this case

$$\sin x\pi, \ \sin 2x\pi, \ \sin 3x\pi, \ \ldots.$$

By taking for $F(x)$ a continuous function whose Fourier series is not always convergent,† we see that even when $\phi(x, y)$ is continuous, the associated series $\Sigma A_r h_r(x) k_r(y)/\theta_r$ is not necessarily always convergent.

If

$$\int_0^1 F(y) \cos p\pi y \, dy = 0,$$

$\sin p\pi x$ will be wanting in the series $\Sigma a_r h_r(x)$, which will therefore not be able to represent any function $g(x)$ unless

$$\int_0^1 g(x) \sin p\pi x \, dx = 0.$$

* The method of § 2, followed out in this case, shews that these are the only zeros of Δ.

† Hobson, *Functions of a Real Variable*, p. 705.

Any number of terms may be wanting in this way, even an infinity, as would happen were $F(x) = -F(1+x)$ when only sines of odd multiples could occur.

Example II.—Take $\phi(x, y) = 1$, when $y < x$,

$= 0$, when $y > x$.

Thus $$\int_0^1 \phi(x, y) f(y) dy = \int_0^x f(y) dy,$$

$$M_x \phi(x, y) = \int_0^1 \phi(x, t) \phi(t, y) dt = \int_y^x dt = x-y \quad (x > y)$$

$$= 0 \qquad (x < y).$$

Similarly $$M_x^2 \phi(x, y) = \tfrac{1}{2}(x-y)^2 \quad (x > y),$$

and so on. The solving function

$$\psi(x, y) = e^{\theta(x-y)} \quad (x > y)$$

$$= 0 \qquad (x < y).$$

The solution of (1) is $f(x) = g(x) + \theta \int_0^x e^{\theta(x-y)} g(y) dy$.

In this example there are no special functions such as h, k, and, since

$$M^n g(x) \leqslant \frac{x^n}{n!} \times \text{the upper limit of } g(x),$$

it follows that, when $g(x)$ is any limited function, $M^n g(x)$ diminishes, as n increases, ultimately faster than the n-th power of any fraction, in accordance with the last result of § 13.

[For a proof of the theorem of de la Vallée-Poussin and Lebesgue used on p. 319, see a paper by the writer that is to appear shortly in the *Proceedings of the Cambridge Philosophical Society*.]

SIR WILLIAM ROWAN HAMILTON'S FLUCTUATING FUNCTIONS

By E. W. Hobson.

[Received November 25th, 1908.—Read December 10th, 1908.]

The memoir "On Fluctuating Functions" was read by Sir W. R. Hamilton before the Royal Irish Academy on June 22nd, 1840, and was published in the *Transactions* of the Academy in 1843. This memoir exhibits in a remarkable degree the power of generalization for which Hamilton is famous, and the results contained therein are still of very considerable interest, although they can scarcely be regarded as possessing a permanent importance comparable with that of the quaternion analysis, or of the great generalizations in the domains of dynamics and of optics, which have ensured to Hamilton for all time a place among the great mathematicians of the world.

A perusal of the memoir impresses the reader not only with the characteristic insight shewn by the author into the essential elements of the difficult theory which is developed, but also with the remarkable rigour with which the investigations are conducted; the state of mathematical analysis at the time of the publication of the memoir being taken into account. The foundations of the integral calculus had not yet been explored by Riemann, and ideas about the infinite and the infinitesimal had not been clarified by the development of the doctrine of limits in its modern arithmetical form.

Some of the reasoning employed by Hamilton would not now be accepted, at least in the language in which he clothed it, but it is remarkable how little change would be required in many parts of his work to adapt it to our present standard of rigour. His mathematical instinct guided him to results which are in the main correct, although some of the necessary limitations were not explicitly introduced, and although he was compelled by the then state of the science to introduce other limitations which can now be removed; the main results of the memoir consequently admit of wide generalization in some directions. It is especially interesting to observe (p. 320) that Hamilton, in criticising some of the investigations of Fourier and of Poisson, gives distinct expression to the

view that the language of limits is more satisfactory than that of infinitesimals.

The main point in Hamilton's work consists in the establishment of the validity of the representation of a prescribed function $f(x)$ by means of a definite integral; the mode of representation being a generalization of Fourier's expression

$$\lim_{n=\infty} \frac{1}{\pi} \int_a^b f(x') \frac{\sin n(x'-x)}{x'-x} dx'.$$

He replaces $\sin n(x'-x)$ by functions of a more general type, all such functions, however, having properties of a similar character to those possessed by $\sin n(x'-x)$. The limit, when n is indefinitely increased, of such a function as $\sin nx$, he speaks of as a *fluctuating function*. The expression $\lim_{n=\infty} \sin nx$ is not, at the present time, regarded as defining a single-valued function, but the fact that Hamilton does not distinguish between

$$\lim_{n=\infty} \frac{1}{\pi} \int_a^b f(x') \frac{\sin n(x'-x)}{x'-x} dx',$$

and

$$\frac{1}{\pi} \int_a^b \frac{f(x')}{x'-x} \lim_{n=\infty} \sin n(x'-x)\, dx',$$

prevents him from arriving at a result which is erroneous in substance. He regards the convergence of the integral to the value of $f(x)$ as due to the fact that a fluctuating function, for example, $\lim_{n=\infty} \sin n(x'-x)$, changes sign an infinite number of times in every finite interval; this causes the integral to vanish in all parts of the interval (a, b), except in the neighbourhood of the point x, where the effect of the fluctuating function is counteracted by the factor $\frac{1}{x'-x}$ which becomes infinite. The principle that, if any function, such as the sine or cosine of an infinite multiple of a variable, changes sign infinitely often in a given interval, and has for its mean value zero, and that if this fluctuating function be multiplied by an arbitrary finite function of the same variable, and afterwards be integrated between finite limits, then the integral of the product will be zero, on account of the mutual destruction or neutralization of all its elements, is spoken of by Hamilton as the *principle of fluctuation*. Although we no longer express the matter quite in the same way, we may remark that Hamilton clearly saw and emphasized the fact that the convergence of the integral to the value of $f(x)$ at a point x depends only on the nature of that function in the neighbourhood of the point x. We are now

acquainted with cases, as, for example,

$$\lim_{n=\infty} \frac{1}{\sqrt{\pi}} \int_a^b f(x')\, ne^{-n^2(x'-x)^2}\, dx',$$

in which the subsidiary function employed, in this case $ne^{-n^2(x'-x)^2}$, is essentially of one sign, and in which cases the convergence to the value $f(x)$ is not due to the principle of fluctuation in the sense in which Hamilton explains it.

Hamilton considered only the case of a continuous function $f(x)$, and he also implicitly introduces a restriction on the nature of the function when he states (p. 275), "It is permitted to suppose that f_α continually increases, or continually decreases from $\alpha = x$ to $\alpha = x+\epsilon$." This amounts to the assumption that at each point x there are neighbourhoods on the right and on the left in which the function is monotone; and we now know that such an assumption is unnecessarily narrow.*

In the present communication I have endeavoured to give rigorous proofs of the main results contained in Hamilton's memoir, and to extend these results by imparting to them a degree of generality which has only become possible owing to the labours of mathematicians during the two generations that have elapsed since the publication of Hamilton's work.

I have taken as the basis of the development of the subject the general convergence theorem† which I have recently published, and which relates to a class of functions of a more general character than Hamilton's fluctuating functions. It is shewn that Hamilton's main results, in a generalized form, can be developed by the consideration of a special case of this theorem. The arbitrary function to be represented is taken to be of a very general type, restricted only by the condition that it must possess a Lebesgue integral in the interval of representation. The function is consequently not restricted to be continuous or limited in the interval. Sufficient conditions are obtained for the convergence of the integrals at any particular point. Further, sufficient conditions are obtained for the uniform convergence of the integrals to the values of the function in an interval in which the prescribed function is continuous. Lastly, a proof is given of the validity of the representation, subject to sufficient conditions, of a function by means of a repeated integral which

* An investigation of the main results of Hamilton has been given by C. Neumann, for the case in which the interval of representation can be divided into a finite number of parts in each of which the function to be represented is monotone; the function being also restricted to have only a finite number of ordinary discontinuities. See his work *Ueber die nach Kreis-Kugel-und Cylinder-functionen fortschreitenden Entwickelungen*, p. 70.

† *Proceedings*, Ser. 2, Vol. 6, p. 350.

is a generalization of the well-known repeated integral employed by Fourier for such representation of an assigned function.

1. Let $\psi(x)$ denote a function defined for all real values of x, and such as to satisfy the following conditions :—

(1) The function $\psi(x)$ does not numerically exceed some fixed positive number U, for any value of x in the unlimited interval $(-\infty, \infty)$.

(2) The function $\psi(x)$ is integrable, in accordance with Riemann's definition of integrability, in every finite interval.

(3) The function $\phi(x) \equiv \int_0^x \psi(x)\,dx$, is such that the equation $\phi(x) = k$, where k is some fixed number, has an indefinite number of roots

$$\ldots x_{-r},\ x_{-(r-1)},\ \ldots x_{-1},\ x_0,\ x_1,\ \ldots x_r \ldots,$$

such that in any interval of length c, where c is some fixed number, two at least of these roots lie, whatever be the position of the interval, in the unlimited interval $(-\infty, \infty)$.

(4) Let $\lim_{x=0} \frac{\psi(x)}{x}$ have a definite finite value, whether the limit be taken on the right or on the left of the point $x = 0$; the limits in the two cases being however not necessarily identical.*

It follows from the conditions (1) and (4) that $\left| \frac{\psi(x)}{x} \right|$ is less than some fixed positive number, for all values of x.

From these conditions satisfied by the function $\psi(x)$, the following properties of the function may be deduced :—

(*a*) If (p, q) be any finite interval, then

$$\left| \int_p^q \psi(x)\,dx \right| < 2cU.$$

* This is the condition assumed by Hamilton. More generally, it would be sufficient for the purposes of the theory that

$$\int_0^\epsilon \frac{\psi(x)}{x}\,dx, \quad \int_0^{-\epsilon} \frac{\psi(x)}{x}\,dx$$

should both exist. This condition would be satisfied, for example, if on each side of $x = 0$, there exists a neighbourhood for which

$$|\psi(x)| = A\,|x|^\nu,$$

where A and ν are positive numbers.

For, let $x_\lambda, x_{\lambda+1}, \ldots, x_\mu$ be those roots of the equation $\phi(x) = k$, which lie in the interval (p, q); we have then

$$\int_p^q \psi(x)\,dx = \int_p^{x_\lambda} \psi(x)\,dx + \int_{x_\lambda}^{x_\mu} \psi(x)\,dx + \int_{x_\mu}^q \psi(x)\,dx.$$

Now $$\int_{x_\lambda}^{x_\mu} \psi(x)\,dx = \phi(x_\mu) - \phi(x_\lambda) = 0;$$

also $x_\lambda - p$, $q - x_\mu$ are both less than c; and therefore the first and third integrals on the right-hand side are each numerically less than cU; whence the result follows.

(*b*) The two improper integrals $\int_0^\infty \frac{\psi(x)}{x}\,dx$, $\int_{-\infty}^0 \frac{\psi(x)}{x}\,dx$ exist.

Consider $\int_\alpha^{\alpha'} \frac{\psi(x)}{x}\,dx$, when $0 < \alpha < \alpha'$; we have then

$$\int_\alpha^{\alpha'} \frac{\psi(x)}{x}\,dx = \frac{1}{\alpha}\int_\alpha^{\alpha''} \psi(x)\,dx + \frac{1}{\alpha'}\int_{\alpha''}^{\alpha'} \psi(x)\,dx,$$

where α'' is some number such that $\alpha \leqslant \alpha'' \leqslant \alpha'$. It follows by employing the result in (*a*), that

$$\left| \int_\alpha^{\alpha'} \frac{\psi(x)}{x}\,dx \right| < \frac{4cU}{\alpha},$$

and this holds for every value of $\alpha' \geqslant \alpha$. This is, however, the condition that $\int_0^h \frac{\psi(x)}{x}\,dx$ has a definite limit, as h is increased indefinitely. The existence of the second integral may be established in a similar manner. We shall denote the values of $\int_0^\infty \frac{\psi(x)}{x}\,dx$, $\int_{-\infty}^0 \frac{\psi(x)}{x}\,dx$ by P and Q respectively.

(*c*) The integral $\int_p^q \frac{\psi(x)}{x}\,dx$ is numerically less than some fixed positive number, independent of p and q.

Let us assume that q is positive. Since $\int_0^x \frac{\psi(x)}{x}\,dx$ is a continuous function of the upper limit x, if we choose a fixed positive number ξ, the value of the integral is a function of x which is limited in the interval $(0, \xi)$. It follows that, if $0 \leqslant q \leqslant \xi$, $\left| \int_0^q \frac{\psi(x)}{x}\,dx \right|$ does not exceed the

positive number which is the upper limit of $\left| \int_0^x \frac{\psi(x)}{x} dx \right|$ in the interval $(0, \xi)$ of x. In case $q > \xi$, we have

$$\int_0^q \frac{\psi(x)}{x} dx = \int_0^\xi \frac{\psi(x)}{x} dx + \int_\xi^q \frac{\psi(x)}{x} dx,$$

and therefore $$\left| \int_0^q \frac{\psi(x)}{x} dx \right| \leqslant \left| \int_0^\xi \frac{\psi(x)}{x} dx \right| + \frac{4cU}{\xi},$$

as has been proved in (*c*). It has now been proved that $\int_0^q \frac{\psi(x)}{x} dx$ is for all positive values of q, less than some fixed positive number. The case in which q is negative may be treated in a similar manner.

Since $$\left| \int_p^q \frac{\psi(x)}{x} dx \right| \leqslant \left| \int_0^q \frac{\psi(x)}{x} dx \right| + \left| \int_0^p \frac{\psi(x)}{x} dx \right|,$$

it now follows that $\left| \int_p^q \frac{\psi(x)}{x} dx \right|$ is less than some fixed positive number, independent of p and q.

2. Referring to a general theorem of convergency which I have recently established,* and taking the set of points there denoted by G to consist of all points in the interval (α, β), we see that, if $F(x', x, n)$ denote a function defined for all values of x' and of x in the interval (α, β), the number n being positive, and if further the function F satisfy the conditions :—

(1) $$|F(x', x, n)| \leqslant \bar{F},$$

provided $$|x' - x| \geqslant \mu,$$

where $\bar{F}$ is some fixed positive number, and μ is also a fixed positive number $< (\beta - \alpha)$.

(2) $$\left| \int_{\alpha_1}^{\beta_1} F(x', x, n)\, dx' \right| < A_n,$$

where A_n is a fixed positive number dependent only on the value of n, x is not interior to the interval $(\alpha_1 - \mu, \beta_1 + \mu)$, and α_1, β_1 have any values such that $\alpha \leqslant \alpha_1 \leqslant \beta_1 \leqslant \beta$.

(3) $$\lim_{n=\infty} A_n = 0;$$

then $$\int_\alpha^{x-\mu} f(x') F(x', x, n)\, dx', \qquad \int_{x+\mu}^{\beta} f(x') F(x', x, n)\, dx',$$

* See the paper "On a General Convergence Theorem, and the Theory of the Representation of a Function by Series of Normal Functions," *Proc.*, Ser. 2, Vol. 6, p. 350.

converge to zero as n is indefinitely increased, uniformly for all values of x in (α, β). The function $f(x)$ is subject only to the condition that it shall possess a Lebesgue integral in the interval (α, β).

Let us now assume that

$$F(x', x, n) = \frac{\psi\{n(x'-x)\}}{x'-x},$$

where $\psi(x)$ is a function such as has been defined in § 1.

It can now be verified that the conditions of the convergence theorem are satisfied by the function $\frac{\psi\{n(x'-x)\}}{x'-x}$, in any finite interval (α, β), and for every positive value of μ, $< \beta-\alpha$.

If $|x'-x| \geqslant \mu$, we have

$$\left|\frac{\psi\{n(x'-x)\}}{x'-x}\right| \leqslant \frac{1}{\mu}|\psi\{n(x'-x)\}| \leqslant \frac{U}{\mu};$$

and therefore the condition (1) is satisfied.

Also

$$\int_{\alpha_1}^{\beta_1} \frac{\psi\{n(x'-x)\}}{x'-x}\,dx' = \frac{1}{\alpha_1-x}\int_{\alpha_1}^{\gamma} \psi\{n(x'-x)\}\,dx' + \frac{1}{\beta_1-x}\int_{\gamma}^{\beta_1} \psi\{n(x'-x)\}\,dx',$$

where γ is some number such that $\alpha_1 \leqslant \gamma \leqslant \beta_1$, provided x does not lie between α_1 and β_1. We have therefore

$$\begin{aligned}\left|\int_{\alpha_1}^{\beta_1} \frac{\psi\{n(x'-x)\}}{x'-x}\,dx'\right| &< \frac{1}{\mu}\left|\int_{\alpha_1}^{\gamma} \psi\{n(x'-x)\}\,dx'\right| + \frac{1}{\mu}\left|\int_{\gamma}^{\beta_1} \psi\{n(x'-x)\}\,dx'\right| \\ &< \frac{1}{n\mu}\left|\int_{n(\alpha_1-x)}^{n(\gamma-x)} \psi(t)\,dt\right| + \frac{1}{n\mu}\left|\int_{n(\gamma-x)}^{n(\beta_1-x)} \psi(t)\,dt\right| \\ &< \frac{2cU}{n\mu},\end{aligned}$$

where $2cU$ is a fixed positive number, independent of n, α_1, β_1, γ and x; this follows from theorem (a) of § 1.

We now see that the conditions (2) and (3) of the convergence theorem are satisfied.

It has therefore been established that, if $\psi(x)$ be a function which satisfies the conditions laid down in § 1, and if (α, β) be any finite interval, and μ be a positive number, $< \beta-\alpha$, then the two integrals

$$\int_{\alpha}^{x-\mu} f(x')\frac{\psi\{n(x'-x)\}}{x'-x}\,dx', \qquad \int_{x+\mu}^{\beta} f(x')\frac{\psi\{n(x'-x)\}}{x'-x}\,dx'$$

converge to zero, as n is indefinitely increased, uniformly for all values of x in the interval (α, β). The function $f(x)$ is any function, limited or unlimited in the interval (α, β), which has a Lebesgue integral in that interval. In the first of these integrals we suppose that $x \geqslant \alpha+\mu$, and in the second that $x \leqslant \beta-\mu$.

3. Let us now consider the integral

$$\int_\alpha^\beta f(x') \frac{\psi\{n(x'-x)\}}{x'-x}\, dx'.$$

This integral may be written in the form

$$\int_\alpha^{x-\mu} f(x') \frac{\psi\{n(x'-x)\}}{x'-x}\, dx' + \int_{x+\mu}^\beta f(x') \frac{\psi\{n(x'-x)\}}{x'-x}\, dx' + \int_{x-\mu}^{x+\mu} f(x') \frac{\psi\{n(x'-x)\}}{x'-x}\, dx'.$$

The first and second of these integrals have been considered in § 2.

Writing $x'-x = \frac{t}{n}$, the third integral may be expressed in the form

$$\int_{-\mu n}^{\mu n} f\left(x+\frac{t}{n}\right) \frac{\psi(t)}{t}\, dt.$$

We shall consider the limiting value of this integral, as n is indefinitely increased.

Let us assume that at the point x, the function $f(x)$ has definite functional limits $f(x+0)$, $f(x-0)$ on the right and on the left respectively. We have then

$$\int_{-\mu n}^{\mu n} f\left(x+\frac{t}{n}\right) \frac{\psi(t)}{t}\, dt$$

$$= f(x+0) \int_0^{\mu n} \frac{\psi(t)}{t} dt + f(x-0) \int_{-\mu n}^0 \frac{\psi(t)}{t}\, dt + \int_0^{\mu n} \left\{ f\left(x+\frac{t}{n}\right) - f(x+0) \right\} \frac{\psi(t)}{t}\, dt + \int_{-\mu n}^0 \left\{ f\left(x+\frac{t}{n}\right) - f(x-0) \right\} \frac{\psi(t)}{t} dt.$$

In virtue of the theorem (*b*) of § 1, we see then that

$$\lim_{n=\infty} \int_{-\mu n}^{\mu n} f\left(x+\frac{t}{n}\right) \frac{\psi(t)}{t}\, dt = Pf(x+0) + Qf(x-0),$$

provided $$\lim_{n=\infty} \int_0^{\mu n} \left\{ f\left(x+\frac{t}{n}\right) - f(x+0) \right\} \frac{\psi(t)}{t}\, dt = 0,$$

and also $$\lim_{n=\infty} \int_{-\mu n}^{0} \left\{ f\left(x+\frac{t}{n}\right) - f(x-0) \right\} \frac{\psi(t)}{t}\, dt = 0.$$

If these conditions are satisfied, we see that

$$\lim_{n=\infty} \int_{\alpha}^{\beta} f(x') \frac{\psi\{n(x'-x)\}}{x'-x}\, dx' = Pf(x+0) + Qf(x-0);$$

and, at a point of continuity of $f(x)$, the value of the limit is $(P+Q)f(x)$.

Let us now assume that a neighbourhood of the point x exists in which the function $f(x)$ is monotone. We may then choose μ so small that the function is monotone in the interval $(x-\mu, x+\mu)$. We have then

$$\int_{0}^{\mu n} \left\{ f\left(x+\frac{t}{n}\right) - f(x+0) \right\} \frac{\psi(t)}{t}\, dt = [f(x+\mu) - f(x+0)] \int_{\eta}^{\mu n} \frac{\psi(t)}{t}\, dt,$$

where η is some number such that $0 \leqslant \eta \leqslant \mu n$.

Since, in accordance with (*c*) of § 1, $\int_{\eta}^{\mu n} \frac{\psi(t)}{t}\, dt$ is numerically less than some fixed number, independent of η, μ and n, we can choose μ so small that

$$\left| \int_{0}^{\mu n} \left\{ f\left(x+\frac{t}{n}\right) - f(x+0) \right\} \frac{\psi(t)}{t}\, dt \right| < \tfrac{1}{4}\epsilon,$$

for all values of n; when ϵ is an arbitrarily chosen positive number. We can also choose μ, so that

$$\left| \int_{-\mu n}^{0} \left\{ f\left(x+\frac{t}{n}\right) - f(x-0) \right\} \frac{\psi(t)}{t}\, dt \right| < \tfrac{1}{4}\epsilon.$$

It is clear that μ can be so chosen that both these inequalities hold for every value of n. The number μ having been so fixed, we may then choose a value n_1 of n, such that

$$\left| f(x+0) \int_{\mu n}^{\infty} \frac{\psi(t)}{t}\, dt \right| < \tfrac{1}{4}\epsilon,$$

and that $$\left| f(x-0) \int_{-\infty}^{-\mu n} \frac{\psi(t)}{t}\, dt \right| < \tfrac{1}{4}\epsilon, \quad \text{for } n \geqslant n_1.$$

It now appears* that μ and n_1 can be so chosen that

$$\left| \int_{x-\mu}^{x+\mu} f(x') \frac{\psi\{n(x'-x)\}}{x'-x}\, dx' - Pf(x+0) - Qf(x-0) \right| < \epsilon,$$

for $n \geqslant n_1$, where ϵ is an arbitrarily chosen positive number.

---

* It has been pointed out to me by a referee that the theorem

$$\lim_{n=\infty} \int_{0}^{n\mu} f\left(x+\frac{t}{n}\right) \frac{\psi(t)}{t}\, dt = f(x+0) \int_{0}^{\infty} \frac{\psi(t)}{t}\, dt = Pf(x+0),$$

Since a value n_2 of n can be so chosen that

$$\left| \int_a^{x-\mu} f(x') \frac{\psi\{n(x'-x)\}}{x'-x}\, dx' + \int_{x+\mu}^{\beta} f(x') \frac{\psi\{n(x'-x)\}}{x'-x}\, dx' \right| < \epsilon,$$

for $n \geqslant n_2$, it follows that

$$\left| \int_a^{\beta} f(x') \frac{\psi\{n(x'-x)\}}{x'-x}\, dx' - Pf(x+0) - Qf(x-0) \right| < 2\epsilon,$$

provided n is not less than the greater of the numbers n_1 and n_2. It has now been shewn that

$$\lim_{n=\infty} \int_a^{\beta} f(x') \frac{\psi\{n(x'-x)\}}{x'-x}\, dx' = Pf(x+0) + Qf(x-0),$$

provided the function $f(x)$ is monotone in some neighbourhood of the point x.

Since any function with limited total fluctuation (*à variation bornée*) is expressible as the difference of two monotone functions, it follows that the same result is valid, provided a neighbourhood of the point x exists in which $f(x)$ has limited total fluctuation.

It is easily seen that, if the point α has a neighbourhood on the right, in which the function $f(x)$ is of limited total fluctuation,

$$\lim_{n=\infty} \int_a^{\beta} f(x') \frac{\psi\{n(x'-\alpha)\}}{x'-\alpha}\, dx' = Pf(\alpha+0),$$

and that, if the point β have a neighbourhood on the left, in which the function is of limited total fluctuation, then

$$\lim_{n=\infty} \int_a^{\beta} f(x') \frac{\psi\{n(x'-\beta)\}}{x'-\beta}\, dx' = Qf(\beta-0).$$

If in an interval (α_1, β_1), contained in the interior of (α, β), the function $f(x)$ is continuous, and if further (α_1, β_1) is contained in the interior of an interval (α_2, β_2) in which $f(x)$ is of limited total fluctuation, then the convergence to the limit $(P+Q)f(x)$ is uniformly convergent in the interval (α_1, β_1).

It will be sufficient to prove this for a monotone function which satisfies the prescribed conditions, since any other function of the prescribed kind is expressible as the difference of two such monotone functions.

---

and $$\lim_{n=\infty} \int_{-n\mu}^{0} f\left(x + \frac{t}{n}\right) \frac{\psi(t)}{t} = Qf(x-0),$$

when f is monotone in the interval $(x-\mu, x+\mu)$, is a special case of a result proved in Bromwich's *Theory of Infinite Series*, p. 443.

It is clear, since a continuous function is uniformly continuous, that μ may be chosen so small that $|f(x+\mu)-f(x)|$ is less than an arbitrarily fixed positive number, for all values of x in (α_1, β_1), and also so that $|f(x-\mu)-f(x)|$ satisfies the same condition. We can also choose μ to be less than both $\alpha_1-\alpha_2$ and $\beta_2-\beta_1$.

Since

$$\int_{\alpha}^{x-\mu} f(x') \frac{\psi\{n(x'-x)\}}{x'-x}\, dx', \qquad \int_{x+\mu}^{\beta} f(x') \frac{\psi\{n(x'-x)\}}{x'-x}\, dx'$$

converge uniformly to zero, as n is indefinitely increased, and we see that

$$\int_{x-\mu}^{x+\mu} f(x') \frac{\psi\{n(x'-x)\}}{x'-x}\, dx'$$

converges uniformly to $(P+Q)f(x)$, for all values of x in (α_1, β_1), it is clear that

$$\int_{\alpha}^{\beta} f(x') \frac{\psi\{n(x'-x)\}}{x'-x}\, dx'$$

converges, for $n = \infty$, uniformly to $(P+Q)f(x)$, for all values of x in the interval (α_1, β_1).

The complete result obtained may be stated as follows:—

Let $f(x)$ be any function, whether limited or not, which has a Lebesgue integral in the interval (α, β). Let $\psi(x)$ be a function defined for all real values of x, and satisfying the conditions prescribed in § 1. *It is sufficient for the validity of*

$$\lim_{n=\infty} \int_{\alpha}^{\beta} f(x') \frac{\psi\{n(x'-x)\}}{x'-x}\, dx' = Pf(x+0)+Qf(x-0),$$

where P, Q denote $\int_0^{\infty} \frac{\psi(t)}{t}\, dt$, $\int_{-\infty}^{0} \frac{\psi(t)}{t}\, dt$ respectively, that the point x should have a neighbourhood, however small, in which $f(x)$ is of limited total fluctuation. If $x = \alpha$, it is sufficient for the validity of

$$\lim_{n=\infty} \int_{\alpha}^{\beta} f(x') \frac{\psi\{n(x'-x)\}}{x'-x}\, dx' = Pf(\alpha+0),$$

that the point α should have a neighbourhood on the right in which $f(x)$ is of limited total fluctuation. A similar statement holds for the point β.

If (α_1, β_1) is an interval in the interior of (α, β), and the function $f(x)$ is continuous in the interval (α_1, β_1), it is sufficient for the uniform convergence in (α_1, β_1) of

$$\int_{\alpha}^{\beta} f(x') \frac{\psi\{n(x'-x)\}}{x'-x}\, dx'$$

as n is indefinitely increased, to the value $(P+Q)f(x)$, that (α_1, β_1) should be contained in the interior of an interval (α_2, β_2) in which $f(x)$ is of limited total fluctuation.

In accordance with the conditions given in § 1, to which the function $\psi(x)$ is subject, we have

$$\int_{x_r}^{x_{r+1}} \psi(x)\, dx = 0,$$

when x_r, x_{r+1} are consecutive roots of the equation $\phi(x) = k$; the difference $x_{r+1} - x_r$ not exceeding the fixed number c. It thus appears that, whether $\psi(x)$ be continuous or not, it must change sign at least once within the interval (x_r, x_{r+1}), and therefore the function $\psi(nx)$ changes sign at least once in the interval $\left(\frac{x_r}{n}, \frac{x_{r+1}}{n}\right)$. In an interval of length c/n contained in the unlimited interval $(-\infty, \infty)$, there is at least one point at which $\psi(nx)$ changes sign, and therefore as n is indefinitely increased, the distance between any two consecutive points at which $\psi(nx)$ changes sign is indefinitely diminished, the points occurring in all parts of the unlimited interval $(-\infty, \infty)$. To express this fact, Sir W. R. Hamilton speaks of $\psi(\infty x)$ as a *fluctuating function;* he regards it as a function which changes sign indefinitely often within any finite range of the variable x.

Disregarding the distinction between

$$\lim_{n=\infty} \int_\alpha^\beta f(x') \frac{\psi\{n(x'-x)\}}{x'-x}\, dx'$$

and

$$\int_\alpha^\beta f(x') \lim_{n=\infty} \frac{\psi\{n(x'-x)\}}{x'-x}\, dx',$$

and the question whether $\psi\{\infty(x'-x)\}$ can be regarded as a definite function, he considers the part of this integral taken in the neighbourhood of the point x to be the only part which does not vanish; the vanishing in that neighbourhood being prevented by the presence of the factor $1/(x'-x)$, which becomes infinite at the point $x' = x$.

In his proof of the convergence of the integral, which is really independent of the language in which the result is expressed, he supposes the function $f(x)$ to be continuous at the point x considered. Moreover, he implicitly restricts the function to be monotone in the neighbourhood of the point (*loc. cit.*, p. 275), when he writes "It is permitted to suppose that f_α continually increases, or continually decreases, from $\alpha = x$ to $\alpha = x+\epsilon$."

In the particular case $\psi(x) = \sin x$, the theorem becomes equivalent to Fourier's representation of a function as the limit of a single integral.

Other special cases of the theorem are those in which

$$\psi(x) = \mathrm{sn}(x, \kappa), \quad \psi(x) = J_1(x),$$

the Bessel's function of order 1.

4. Sufficient conditions for the convergence of the integral, other than those given in the theorem of § 3 may be obtained. The integrals

$$\int_0^\mu \{f(x+\lambda)-f(x+0)\} \frac{\psi(n\lambda)}{\lambda} d\lambda,$$

$$\int_{-\mu}^0 \{f(x+\lambda)-f(x-0)\} \frac{\psi(n\lambda)}{\lambda} d\lambda,$$

do not exceed, in absolute magnitude, the values of

$$U\int_0^\mu \left| \frac{f(x+\lambda)-f(x+0)}{\lambda} \right| d\lambda,$$

$$U\int_{-\mu}^0 \left| \frac{f(x+\lambda)-f(x-0)}{\lambda} \right| d\lambda,$$

respectively; if it be assumed that the latter integrals exist.

In case the two limits

$$\lim_{h=0} \frac{f(x+h)-f(x+0)}{h}, \qquad \lim_{h=0} \frac{f(x-h)-f(x-0)}{-h}$$

are either determinate, or indeterminate between finite limits of indeterminancy, the two last integrals exist, and are continuous functions of μ. It follows that μ may be so chosen that, for all values of n, the two first integrals are numerically less than arbitrarily small positive numbers. More generally it will be sufficient that

$$|f(x+\lambda)-f(x+0)| \leqslant A\lambda^k,$$

$$|f(x-\lambda)-f(x-0)| \leqslant A'\lambda^{k'},$$

where A, A', k, k' are fixed positive numbers, for all values of λ, such that $0 \leqslant \lambda \leqslant \lambda_1$, where λ_1 is some fixed positive number.

It is also sufficient that

$$|f(x+\lambda)-f(x+0)| \leqslant \frac{A}{\log\frac{1}{\lambda} \log\log\frac{1}{\lambda} \ldots \left[\log\log\ldots\frac{1}{\lambda}\right]^{1+\alpha}},$$

with a similar condition for $|f(x-\lambda)-f(x-0)|$, where A and α are fixed positive numbers.

In case any of these sufficient conditions is satisfied, the integral

$$\int_\alpha^\beta f(x') \frac{\psi\{n(x'-x)\}}{x'-x}\, dx'$$

converges to the value $Pf(x+0)+Qf(x-0)$, as is seen from the reasoning in § 3.

At a point of continuity of the function x, it is sufficient for the convergence of the integral to the value $f(x)$, that the four derivatives of $f(x)$ at the point should be finite, or in particular that $f(x)$ have a finite differential coefficient at the point.

It is sufficient for the uniform convergence of the integral in an interval (α_1, β_1) contained in the interior of (α, β), and in which interval (α_1, β_1), $f(x)$ is continuous, that the integrals

$$\int_0^\mu \left|\frac{f(x+\lambda)-f(x)}{\lambda}\right| d\lambda, \qquad \int_{-\mu}^0 \left|\frac{f(x+\lambda)-f(x-0)}{\lambda}\right| d\lambda$$

should both exist, for all values of x in (α_1, β_1), and should converge to zero, as μ is indefinitely diminished, uniformly for all values of x in (α_1, β_1). This condition is satisfied if the conditions

$$|f(x+\lambda)-f(x)| \leqslant A\lambda^k,$$
$$|f(x-\lambda)-f(x)| \leqslant A'\lambda^{k'},$$

are satisfied in the interval (α_1, β_1) of x, the values of A, A', k, k' being independent of the position of x in the interval.

If, for example, $f(x)$ have a differential coefficient limited in the interval (α_1, β_1), the convergence to the value $f(x)$ is uniform in that interval.

Generally, it is sufficient for the convergence of

$$\int_\alpha^\beta f(x') \frac{\psi\{n(x'-x)\}}{x'-x}\, dx',$$

as n is indefinitely increased, to the value $Pf(x+0)+Q(x-0)$, at a point x at which the functional limits $f(x+0)$, $f(x-0)$ exist, that the function should satisfy, in the neighbourhood of the point x, any one of the above sufficient conditions for the convergence of the integral in an interval containing the point.

The function $f(x)$ is restricted outside the neighbourhood of the point only by the condition that it should have a Lebesgue integral in the interval (α, β).

Moreover, the convergence to the value $f(x)$ in an interval (α_1, β_1) in which $f(x)$ is continuous, and which is in the interior of (α, β), is satisfied if one of the above conditions is uniformly satisfied in the interval (α_1, β_1).

At the point α, $f(\alpha-0)$ must be regarded as having the value 0, and at the point β, $f(\beta+0)$ must be regarded as having the value 0. The function ψ is any function, continuous or discontinuous, which satisfies the conditions laid down in § 1, and the values of P, Q are

$$\int_0^\infty \frac{\psi(x)}{x}\,dx, \quad \int_{-\infty}^0 \frac{\psi(x)}{x}dx\,,$$

respectively.

5. It will now be shown that, subject to certain very general conditions, the interval (α, β) may be replaced by the unlimited interval $(-\infty, \infty)$.

It will be assumed that $f(x)$ has a Lebesgue integral in every finite interval; and further that, if a denote a positive number,

$$\int_a^\infty \left|\frac{f(x')}{x}\right| dx', \quad \int_{-\infty}^{-a} \left|\frac{f(x')}{x'}\right| dx'$$

exist as $\lim_{h=\infty} \int_a^h \left|\frac{f(x')}{x'}\right| dx', \quad \lim_{h=\infty} \int_{-h}^{-a} \left|\frac{f(x')}{x'}\right| dx',$

respectively.

Let us assume that x is confined to a finite interval (α_1, β_1). We have then

$$\left|\int_\eta^{\eta'} \frac{f(x')}{x'-x}\,\psi\{n(x'-x)\}\,dx'\right| < U\int_\eta^{\eta'} \left|\frac{f(x')}{x'-x}\right| dx'$$

$$< U(1+\xi)\int_\eta^{\eta'} \left|\frac{f(x')}{x'}\right| dx',$$

where η is a positive number $(> \beta_1)$, chosen so great that

$$\frac{x'}{x'-\beta_1} < 1+\xi,$$

for $x' \geqslant \eta$, and ξ denotes an arbitrarily chosen number. The inequality then holds for every value of $\eta' > \eta$.

It follows that, if ϵ be an arbitrarily chosen positive number, η may be so chosen that

$$\left|\int_\eta^{\eta'} \frac{f(x')}{x'-x}\,\psi\{n(x'-x)\}\,dx'\right| < \epsilon,$$

for $\eta' \geqslant \eta$. It may similarly be shewn that a negative value of $\xi\,(< \alpha_1)$

may be so chosen that

$$\left| \int_{\xi'}^{\xi} \frac{f(x')}{x'-x} \psi\{n(x'-x)\}\, dx' \right| < \epsilon,$$

for $\xi' \leqslant \xi$.

It follows that the integral

$$\int_{-\infty}^{\infty} \frac{f(x')}{x'-x} \psi\{n(x'-x)\}\, dx'$$

exists, in case the integral when taken over a finite interval which contains the point x in its interior have a definite value. The integral denotes the double limit

$$\lim_{\beta=\infty,\ \alpha=-\infty} \int_{\alpha}^{\beta} \frac{f(x')}{x'-x} \psi\{n(x'-x)\}\, dx'.$$

If x be a point at which one of the conditions given in §§ 3, 4 is satisfied, a value n_1 of n can be so chosen that

$$\left| \int_{\xi}^{\eta} f(x') \frac{\psi\{n(x'-x)\}}{x'-x}\, dx' - Pf(x+0) - Qf(x-0) \right| < \epsilon,$$

for $n \geqslant n_1$; therefore also

$$\left| \int_{-\infty}^{\infty} f(x') \frac{\psi\{n(x'-x)\}}{x'-x}\, dx' - Pf(x+0) - Qf(x-0) \right| < 3\epsilon,$$

for $n \geqslant n_1$.

It follows that

$$\lim_{n=\infty} \int_{-\infty}^{\infty} f(x') \frac{\psi\{n(x'-x)\}}{x'-x}\, dx' = Pf(x+0) + Qf(x-0),$$

provided $f(x)$ satisfies one of the sufficient conditions in the neighbourhood of the point x. Moreover the convergence to the value $f(x)$ is uniform in an interval in which the function is continuous, provided one of the sufficient conditions obtained in §§ 3, 4, for such uniform convergence is satisfied.

The following theorem has now been established :—

If $f(x')$ have a Lebesgue integral in every finite interval, and if

$$\int_{\alpha}^{\infty} \left| \frac{f(x')}{x'} \right| dx', \qquad \int_{-\infty}^{-\alpha} \left| \frac{f(x')}{x'} \right| dx',$$

where a is positive, exist as the limits of Lebesgue integrals $\left(\text{this condition being satisfied in particular if } \int_{-\infty}^{\infty} |f(x')|\,dx' \text{ exists}\right)$, *then*

$$\int_{-\infty}^{\infty} f(x')\,\frac{\psi\{n(x'-x)\}}{x'-x}\,dx'$$

converges, as n is indefinitely increased, to the value $Pf(x+0)+Qf(x-0)$, if one of the sufficient conditions given in §§ 3, 4 is satisfied. The uniform convergence to the value $(P+Q)f(x)$, is an interval of continuity of $f(x)$ holds, subject to one of the sufficient conditions given in §§ 3, 4 being satisfied.

6. Let it now be assumed that the function $\psi(x)$ is everywhere continuous. Since $\lim_{x=0} \frac{\psi(x)}{x}$ is finite, it then follows that $\psi(0) = 0$. Let it further be assumed that there exists a function $\chi(x)$, limited in the unlimited interval $(-\infty, \infty)$, and such that

$$\int_0^x \chi(x)\,dx = \psi(x).$$

This last condition will, in particular, be satisfied if $\psi(x)$ have a limited differential coefficient in $(-\infty, \infty)$; or, more generally, if it have a limited derivative which is also of limited total fluctuation in every finite interval. The integral may exist only as a Lebesgue integral. We have then

$$\int_0^n \chi\{u(x'-x)\}\,du = \frac{\psi\{n(x'-x)\}}{x'-x}.$$

The expression $$\lim_{n=\infty} \int_{-\infty}^{\infty} f(x')\,\frac{\psi\{n(x'-x)\}}{x'-x}\,dx',$$

is equivalent to $$\lim_{n=\infty} \int_{-\infty}^{\infty} dx' \int_0^n f(x')\,\chi\{u(x'-x)\}\,du.$$

It will now be shewn that, provided

$$\int_{-\infty}^{\infty} |f(x')|\,dx'$$

exists as the double limit

$$\lim_{k=\infty,\, h=-\infty} \int_h^k |f(x')|\,dx',$$

the order of integration in the above repeated integral may be reversed, without affecting the value of the limit.

It will first be shewn that

$$\int_\alpha^\beta f(x')\,dx' \int_0^n \chi\{u(x'-x)\}\,du$$

can be replaced by $$\int_0^n du \int_\alpha^\beta f(x')\,\chi\{u(x'-x)\}\,dx'.$$

Let K denote that set of points in the interval (α, β) for which $|f(x')|$ is greater than a fixed positive number N. This number N may be so chosen that

$$\int_K |f(x')|\,dx' < \eta,$$

where η is an arbitrarily chosen positive number. Let $f_1(x')$ be a function defined in the interval (α, β) by the laws, $f_1(x') = f(x')$ when $|f(x')| \leqslant N$, and $f_1(x') = 0$, when $|f_1(x')| > N$. The function $f_1(x')$ is summable, and limited in the interval (α, β). The function $f_1(x')\chi\{u(x'-x)\}$ is a limited summable function, defined for the rectangle bounded by $x = \alpha$, $x = \beta$, $u = 0$, $u = n$; it follows, then, that

$$\int_\alpha^\beta f_1(x')\,dx' \int_0^n \chi\{u(x'-x)\}\,du = \int_0^n du \int_\alpha^\beta f_1(x')\,\chi\{u(x'-x)\}\,dx',$$

since, by a known theorem,* a Lebesgue double integral can always be replaced by either of the corresponding repeated integrals. The repeated integral on the left-hand side differs from

$$\int_\alpha^\beta f(x')\,dx' \int_0^n \chi\{u(x'-x)\}\,du$$

by less than $U' \int_{(K)} |f(x')|\,dx'$ or $\eta U'$; where U' is the finite upper limit of $\left|\frac{\psi\{n(x'-x)\}}{x'-x}\right|$. The other repeated integral differs from

$$\int_0^n du \int_\alpha^\beta f(x')\,\chi\{u(x'-x)\}\,dx'$$

by less than $nU''\eta$, where U'' is the upper limit of $|\chi\{u(x'-x)\}|$. The

* See Fubini, *Atti dei Lincei*, Vol. xvi., 1907, p. 608.

number n being fixed, η may be so chosen that $\eta U'$ and $n\eta U''$ are arbitrarily small. It therefore follows that

$$\int_\alpha^\beta f(x')\,dx' \int_0^n \chi\{u(x'-x)\}\,du = \int_0^n du \int_\alpha^\beta f(x')\,\chi\{u(x'-x)\}\,dx'.$$

Next, let β have the values in a sequence $\beta_1, \beta_2, \ldots, \beta_r$, which diverges to $+\infty$, and let α have the values in a sequence $\alpha_1, \alpha_2, \ldots, \alpha_r, \ldots$ which diverges to $-\infty$, and denote $\int_{\alpha_r}^{\beta_r} f(x')\,\chi\{u(x'-x)\}\,dx'$ by $s_r(u)$. Since $|s_r(u)|$ is, for every value of u in the interval $(0, n)$, and for every value of r, less than some fixed positive number, $\int_{-\infty}^{\infty} |f(x')|\,dx'$ being assumed to have a finite value, it follows, by a known theorem,* that $\int_0^n s_r(u)\,du$ converges to $\int_0^n s(u)\,du$, where

$$s(u) \equiv \lim_{r=\infty} s_r(u).$$

It has therefore been shewn that

$$\lim_{r=\infty} \int_0^n du \int_{\alpha_r}^{\beta_r} f(x')\,\chi\{u(x'-x)\}\,dx' = \int_0^n du \int_{-\infty}^{\infty} f(x')\,\chi\{u(x'-x)\}\,dx'.$$

That the limit is independent of the particular sequences $\{\beta_r\}$, $\{\alpha_r\}$ employed is seen from the fact that

$$\int_0^n du \int_\beta^{\beta'} f(x')\,\chi\{u(x'-x)\}\,dx',$$

which has been shewn above to be equal to

$$\int_\beta^{\beta'} f(x')\,\frac{\psi\{u(x'-x)\}}{x'-x}\,dx'$$

is arbitrarily small in numerical value, if β be taken sufficiently large, and for all values of β' $(>\beta)$; a similar remark applying to

$$\int_0^n du \int_{\alpha'}^{\alpha} f(x')\,\chi\{u(x'-x)\}\,dx',$$

* See *The Theory of Functions of a Real Variable*, p. 542.

where $a' < a$. It has now been proved that

$$\lim_{\beta=\infty,\ \alpha=-\infty} \int_0^n du \int_\alpha^\beta f(x')\,\chi\{u(x'-x)\}\,dx' = \int_0^n du \int_{-\infty}^{\infty} f(x')\,\chi\{u(x'-x)\}\,dx'.$$

Since the order of integration in the repeated integral on the left-hand side has been shewn to be reversible, we have

$$\int_0^n du \int_{-\infty}^{\infty} f(x')\,\chi\{u(x'-x)\}\,dx' = \lim_{\beta=\infty,\ \alpha=-\infty} \int_\alpha^\beta dx' \int_0^n f(x')\,\chi\{u(x'-x)\}\,du$$

$$= \int_{-\infty}^{\infty} dx' \int_0^n f(x')\,\chi\{u(x'-x)\}\,du;$$

therefore

$$\int_0^\infty du \int_{-\infty}^{\infty} f(x')\,\chi\{u(x'-x)\}\,dx' = \lim_{n=\infty} \int_{-\infty}^{\infty} dx' \int_0^n f(x')\,\chi\{u(x'-x)\}\,du$$

$$= \lim_{n=\infty} \int_{-\infty}^{\infty} f(x')\,\frac{\psi\{n(x'-x)\}}{x'-x}\,dx',$$

whenever the limit on the right-hand side exists. Sufficient conditions for such existence have been obtained in § 5. It has, however, been here assumed that $\int_{-\infty}^{\infty} |f(x')|\,dx'$ exists as the double limit of a Lebesgue integral.

The following theorem has now been established:—

Let $\chi(x)$ be a function which is limited in the unlimited interval $(-\infty, \infty)$, and such that

$$\int_0^x \chi(x)\,dx \equiv \psi(x)$$

satisfies the conditions laid down in § 1. *Let $f(x)$ be any function which has a Lebesgue integral in every finite integral, and is such that*

$$\int_{-\infty}^{\infty} |f(x)|\,dx$$

has a definite finite value, as the double limit of a Lebesgue integral. The repeated integral

$$\int_0^\infty du \int_{-\infty}^{\infty} f(x')\,\chi\{u(x'-x)\}\,dx'$$

is equal to $$Pf(x+0)+Qf(x-0),$$

at any point x for which a neighbourhood exists in which $f(x)$ is of limited total fluctuation, or if any one of the sufficient conditions stated in §§ 3, 4 is satisfied.

This theorem is a generalization of the well known representation, due to Fourier, of an assigned function by means of the repeated integral

$$\int_0^\infty du \int_{-\infty}^\infty f(x') \cos u(x'-x)\, dx'.$$

ON THE REPRESENTATION OF A FUNCTION BY SERIES OF BESSEL'S FUNCTIONS

By E. W. Hobson.

[Received and Read December 10th, 1908.]

The method of investigation of the convergence of series which represent a function of a real variable in a given interval which I have developed in my paper* "On a General Convergence Theorem, and the Theory of the Representation of a Function by Series of Normal Functions," is here applied to the case of series of Bessel's functions. A function $f(z)$ defined for the interval (0, 1) may be represented in that interval by a series $\sum_{n=1}^{\infty} c_n J_m(k_n z)$, where m is a prescribed constant $\geqslant 0$, and the numbers k_n are the positive roots of the equation

$$kJ'_m(k)+HJ_m(k) = 0.$$

The real number H may have any assigned value including the value zero, and we may regard the value $H = \infty$ as applying to the case in which the equation is

$$J_m(k) = 0.$$

The coefficients c_n are of known form.

It is here shewn that, if the function $f(z)$ is such that $z^{\frac{1}{2}}f(z)$ has a Lebesgue integral in the interval (0, 1), the question whether the series converges, or not, at any interior point of the interval, or also at the end-point 1, depends only on the nature of the function $f(z)$ in an arbitrarily small neighbourhood of that point. It is moreover shewn that at such a point the series converges to the value $\frac{1}{2}\{f(z+0)+f(z-0)\}$, if the sufficient condition is satisfied, that a neighbourhood of the point z exists in which the function is of limited total fluctuation (*à variation bornée*). It is further shewn that, if $f(z)$ be continuous in an interval (a, b) contained in (0, 1), then the series converges uniformly in (a, b) to the value $f(z)$ in case (a, b) is contained in the interior of another interval (a', b') in which the function is of limited total fluctuation; the interval (a', b') may exceed (a, b) in length by an arbitrarily small amount.

* *Proceedings*, Ser. 2, Vol. 6, p. 349.

The condition that $z^{\frac{1}{2}}f(z)$ should have a Lebesgue integral in the interval (0, 1) is satisfied if $f(z)$, whether it be limited or not, have a Lebesgue integral in the interval, provided further that $\int_0^\epsilon z^{\frac{1}{2}}f(z)\,dz$ exists. This last condition will be satisfied, in particular, if $f(z)$ is infinite at $z = 0$, and of order less than $\frac{3}{2}$, or, more generally, if any of the known sufficient conditions for the convergence of such an integral are satisfied.

The case of the series of Bessel's functions differs from that of the series of Sturm-Liouville functions considered in my former paper, on account of the fact of the existence of the singularity at the point $z = 0$ of the differential equation satisfied by the Bessel's functions. It may be remarked that the series of Bessel's functions necessary for the representation of a function in an interval (a, b), where $0 < a < b$, and in which Bessel's functions of both kinds occur, fall under the category of series of Sturm-Liouville functions, since there is no singularity of the functions in the interval (a, b). Such a mode of representation has accordingly been fully considered in the former paper.

The particular case of the series considered in the present communication which arises when $H = \infty$, $m = 0$, has been treated* by Kneser for the case of a function which is of limited total fluctuation in the whole interval (0, 1), and is therefore a limited function. A study of Kneser's memoir has been of much assistance to me in the investigation which I here present.

1. The differential equation

$$\frac{d}{dx}\left(x\frac{dy}{dx}\right)+\left(\lambda x-\frac{m^2}{x}\right)y=0$$

is satisfied by the two Bessel's functions of order m, and of argument $\lambda^{\frac{1}{2}}x$. If we make x^2 the independent variable in the equation, instead of x, and then change x^2 into x, we see that the differential equation

$$\frac{d}{dx}\left(4x\frac{dy}{dx}\right)-\frac{m^2}{x}y+\lambda y=0, \tag{1}$$

is satisfied by the two Bessel's functions $J_m(\lambda^{\frac{1}{2}}x^{\frac{1}{2}})$, $Y_m(\lambda^{\frac{1}{2}}x^{\frac{1}{2}})$.

We take as normal functions those solutions of this equation which satisfy the conditions (1) that they are finite at the singular point $x = 0$,

* See his memoir, "Die Theorie der Integralgleichungen und die Darstellung willkürlicher Funktionen in der mathematischen Physik," *Math. Annalen*, Vol. LXIII.

and (2) that, at the point $x = 1$, the condition

$$\frac{dy}{dx} + \tfrac{1}{2}Hy = 0$$

is satisfied; the values of the parameter λ being so determined that such solutions exist. Assuming that $m \geqslant 0$, we see that only Bessel's functions of the first kind are admissible, and that the values of λ are determined by the equation

$$\lambda^{\frac{1}{2}} J'_m(\lambda^{\frac{1}{2}}) + H J_m(\lambda^{\frac{1}{2}}) = 0, \tag{2}$$

the normal functions being given by

$$\phi_n(x) = J_m(\lambda_n^{\frac{1}{2}} x^{\frac{1}{2}}) \left\{ \int_0^1 \{J_m(\lambda_n^{\frac{1}{2}} x^{\frac{1}{2}})\}^2 dx \right\}^{-\frac{1}{2}},$$

where λ_n is the n-th of the roots of the equation (2) arranged in ascending order of magnitude.

It can easily be shewn that

$$\int_0^1 \{J_m(\lambda^{\frac{1}{2}} x^{\frac{1}{2}})\}^2 dx = \frac{2}{\lambda} \int_0^{\lambda^{\frac{1}{2}}} a \{J_m(a)\}^2 da$$

$$= \frac{1}{\lambda} \{(\lambda - m^2) J_m^2(\lambda^{\frac{1}{2}}) + \lambda J'^2_m(\lambda^{\frac{1}{2}})\};$$

it then follows that $\phi_n(x)$ is given by

$$\phi_n(x) = J_m(\lambda_n^{\frac{1}{2}} x^{\frac{1}{2}}) \left\{ \left(1 - \frac{m^2}{\lambda}\right) J_m^2(\lambda^{\frac{1}{2}}) + J'^2_m(\lambda^{\frac{1}{2}}) \right\}^{-\frac{1}{2}}. \tag{3}$$

It has here been assumed that zero is not one of the characteristic values of λ. When $\lambda = 0$, that solution of the differential equation (1) which is finite at the point $x = 0$ is of the form $Ax^{\frac{1}{2}m}$; and this can satisfy the condition

$$\frac{dy}{dx} + \tfrac{1}{2}Hy = 0,$$

for $x = 1$, only in case $H + m = 0$. In this case the corresponding normal function $\phi_1(x)$ is $(m+1)^{\frac{1}{2}} x^{\frac{1}{2}m}$.

In order to investigate the validity of the representation of an arbitrarily prescribed function by means of a series of the normal functions $\phi_n(x)$, in the interval (0, 1), it will be shewn that if $F(x', x, n)$ denote the expression

$$(xx')^{\frac{1}{2}} \{\phi_1(x)\, \phi_1(x') + \phi_2(x)\, \phi_2(x') + \ldots + \phi_n(x)\, \phi_n(x')\},$$

then $F(x', x, n)$ satisfies the conditions of the general convergence theorem

given in my paper* "On a general Convergence Theorem, and on the Representation of Functions by Series of Normal Functions." The set of points there denoted by G will in the present case consist of all the points of an interval $(\xi, 1)$, where ξ is an arbitrarily small fixed positive number.

2. It is necessary for the purposes of the investigation here undertaken to obtain some detailed properties of the Bessel's functions with complex argument.

The two Bessel's functions $J_m(x)$, $Y_m(x)$, of order m, may be defined for all real and complex values of x which do not lie on the negative part of the real axis, by means of the formulæ

$$J_m(x) = \frac{x^m}{2^m \Pi(m)} \left\{ 1 - \frac{x^2}{2.2m+2} + \frac{x^4}{2.4.2m+2.2m+4} - \dots \right\},$$

$$Y_m(x) = \pi e^{m\pi\iota} \frac{J_{-m}(x) - \cos m\pi J_m(x)}{\sin 2m\pi};$$

where the expression x^m is taken to denote $r^m(\cos m\theta + \iota \sin m\theta)$; r denoting the modulus of x, and the argument θ being restricted to values between $-\pi$ and π. It is understood that, when m is an integer, $Y_m(x)$ is defined as the limit of the expression in the second formula, as m approaches such integral value. This definition of $Y_m(x)$ becomes nugatory when m is half an odd integer. In this case we multiply both sides of the equation by $\cos m\pi$, and then write $Y_m(x)$ for $Y_m(x)\cos m\pi$; the new value of $Y_m(x)$ is then finite.

In the following investigations, the case in which m is half an odd integer is included, if we remember that, throughout the work, the factor $\cos m\pi$ is to be in that case throughout rejected.

It is known that, when m is real and $> -\frac{1}{2}$, and when the real part of x is positive,

$$Y_m(x) + \tfrac{1}{2}\iota\pi \frac{e^{m\pi\iota}}{\cos m\pi} J_m(x)$$
$$= \frac{\Pi(-\frac{1}{2}-m)}{\Pi(-\frac{1}{2})} e^{(\frac{1}{2}m\pi+\frac{1}{4}\pi+x)\iota} \frac{1}{(2x)^{\frac{1}{2}}} \int_0^\infty e^{-u} u^{m-\frac{1}{2}} \left(1 + \frac{\iota u}{2x}\right)^{m-\frac{1}{2}} dx,$$

$$Y_m(x) - \tfrac{1}{2}\iota\pi \frac{e^{m\pi\iota}}{\cos m\pi} J_m(x)$$
$$= \frac{\Pi(-\frac{1}{2}-m)}{\Pi(-\frac{1}{2})} e^{(\frac{1}{2}m\pi-\frac{1}{4}\pi-x)\iota} \frac{1}{(2x)^{\frac{1}{2}}} \int_0^\infty e^{-u} u^{m-\frac{1}{2}} \left(1 - \frac{\iota u}{2x}\right)^{m-\frac{1}{2}} du.$$

* *Proceedings*, Ser. 2, Vol. 6, p. 350.

In order to estimate the value of the two integrals

$$\int_0^\infty e^{-u} u^{m-\frac{1}{2}} \left(1 \pm \frac{\iota u}{2x}\right)^{m-\frac{1}{2}} du,$$

let it be first assumed that $m-\frac{3}{2} \geqslant 0$. Using Darboux's form of Taylor's theorem for functions of complex numbers, we have

$$\int_0^\infty e^{-u} u^{m-\frac{1}{2}} \left(1 \pm \frac{\iota u}{2x}\right)^{m-\frac{1}{2}} du = \int_0^\infty e^{-u} u^{m-\frac{1}{2}} \left[1 \pm (m-\tfrac{1}{2}) \frac{\iota \lambda u}{2x} \left(1 \pm \frac{\iota u \theta}{2x}\right)^{m-\frac{3}{2}}\right] du,$$

where $0 \leqslant \theta \leqslant 1$, and λ is such that its modulus does not exceed unity. Since

$$\operatorname{mod} \left(1 \pm \frac{\iota u \theta}{2x}\right) \leqslant 1 + \frac{u}{2r},$$

where r denotes the modulus of x, we see that the integral on the left-hand side differs from $\Pi(m-\frac{1}{2})$ by an amount of which the modulus does not exceed

$$\frac{1}{2r}(m-\tfrac{1}{2}) \int_0^\infty e^{-u} u^{m+\frac{1}{2}} \left(1 + \frac{u}{2r}\right)^{m-\frac{3}{2}} du$$

or $$\frac{1}{2r}(m-\tfrac{1}{2}) \int_0^\infty e^{-u} u^{m+\frac{1}{2}} \left[1 + (m-\tfrac{3}{2}) \frac{u}{2r} + \ldots \right.$$

$$\left. + \frac{(m-\frac{3}{2})(m-\frac{5}{2}) \ldots (m-\frac{1}{2}-s)}{s!} \left(\frac{u}{2r}\right)^s \left(1 + \frac{\theta' u}{2r}\right)^{m-\frac{3}{2}-s}\right] du$$

where θ' is such that $0 \leqslant \theta' \leqslant 1$.

If now s be taken to be the integer next greater than $m-\frac{3}{2}$, or equal to $m-\frac{3}{2}$, we see that

$$\left(1 + \frac{\theta' u}{2r}\right)^{m-\frac{3}{2}-s} \leqslant 1;$$

hence the modulus does not exceed a number of the form

$$\frac{a_0}{r} + \frac{a_1}{r^2} + \ldots + \frac{a_s}{r^{s+1}},$$

where $a_0, a_1, \ldots, a_s$ are positive numbers. It has therefore been shewn that

$$\int_0^\infty e^{-u} u^{m-\frac{1}{2}} \left(1 \pm \frac{\iota u}{2x}\right)^{m-\frac{1}{2}} du = \Pi(m-\tfrac{1}{2}) \left\{1 + \frac{a(x)}{r}\right\},$$

where $a(x)$ denotes a number of which the modulus is less than some fixed positive number independent of x, for all values of x of which the moduli exceed an arbitrarily chosen positive number.

We now see that, if $m-\frac{3}{2} \geqslant 0$, $J_m(x)$, $Y_m(x)$ are given by

$$J_m(x) = \frac{1}{(2\pi x)^{\frac{1}{2}}} \left\{ e^{\iota(\frac{1}{2}m\pi+\frac{1}{4}\pi-x)} P_m(x) + e^{-\iota(\frac{1}{2}m\pi+\frac{1}{4}\pi-x)} P_m(-x) \right\},$$

$$Y_m(x) = \frac{\iota}{2} \left(\frac{\pi}{2x}\right)^{\frac{1}{2}} e^{m\pi\iota} \sec m\pi \left\{ -e^{\iota(\frac{1}{2}m\pi+\frac{1}{4}\pi-x)} P_m(x) + e^{-\iota(\frac{1}{2}m\pi+\frac{1}{4}\pi-x)} P_m(-x) \right\}, \tag{4}$$

where $P_m(x)$, $P_m(-x)$ are both of the form $1+\frac{\alpha(x)}{r}$, and $\alpha(x)$ denotes two different numbers such that $|\alpha(x)|$ is less than a fixed number independent of x, provided r is not less than some arbitrarily chosen positive number η. This result can now be extended to the case in which $m-\frac{1}{2} \geqslant 0$.

Since $$J_m(x) = \frac{2(m+1)}{x} J_{m+1}(x) - J_{m+2}(x),$$

and $$Y_m(x) = \frac{2(m+1)}{x} Y_{m+1}(x) - Y_{m+2}(x),$$

we find that, assuming the above expressions to hold for $m+1$, $m+2$, they hold also for m, where

$$P_m(x) = \frac{2(m+1)\,\iota}{x} P_{m+1}(x) + P_{m+2}(x),$$

$$P_m(-x) = -\frac{2(m+1)\,\iota}{x} P_{m+1}(-x) + P_{m+2}(-x).$$

It is then clear that $P_m(x)$, $P_m(-x)$ are of the form $1+\frac{\alpha(x)}{r}$, since $P_{m+1}(x)$, $P_{m+2}(x)$, $P_{m+1}(-x)$, $P_{m+2}(-x)$ are of this form.

In an exactly similar manner it is shewn that the theorem holds if $m+\frac{1}{2} \geqslant 0$, and generally for all real values of m. It has been shewn that the functions $J_m(x)$, $Y_m(x)$ are expressed by the formulæ (4), where $|P_m(x)|$ is less than some fixed number independent of x, provided mod x is not less than an arbitrarily fixed positive number η. Moreover, $P_m(x)$ is of the form $1+\frac{\alpha(x)}{r}$, where $\alpha(x)$ has a similar property, subject to the same condition. The theorem has been proved on the hypothesis that x has a real positive part; and from the fact that the functions are continuous on the imaginary axis it follows that the theorem also holds for values of x of which the real part is zero. By using the known expressions for $J_m(-x)$, $Y_m(-x)$ in terms of $J_m(x)$, $Y_m(x)$, it is seen that

the result holds for the whole plane of x, a section along the negative part of the real axis being excluded.

The differential coefficients of $J_m(x)$, $Y_m(x)$ may be expressed by means of the formulæ

$$J'_m(x) = \frac{m}{x} J_m(x) - J_{m+1}(x),$$

$$Y'_m(x) = \frac{m}{x} Y_m(x) - Y_{m+1}(x).$$

It follows that, when the real part of x is positive or zero,

$$J'_m(x) = \frac{1}{(2\pi x)^{\frac{1}{2}}} \left\{ e^{\iota(\frac{1}{2}m\pi + \frac{1}{4}\pi - x)} R_m(x) + e^{-\iota(\frac{1}{2}m\pi + \frac{1}{4}\pi - x)} S_m(x) \right\},$$

$$Y'_m(x) = \frac{\iota}{2} \left(\frac{\pi}{2x}\right)^{\frac{1}{2}} e^{m\pi\iota} \sec m\pi \left\{ -e^{\iota(\frac{1}{2}m\pi + \frac{1}{4}\pi - x)} R_m(x) + e^{-\iota(\frac{1}{2}m\pi + \frac{1}{4}\pi - x)} S_m(x) \right\},$$

where

$$R_m(x) = \frac{m}{x} P_m(x) - \iota P_{m+1}(x),$$

$$S_m(x) = \frac{m}{x} P_m(-x) + \iota P_{m+1}(x).$$

It is then seen that, if $\operatorname{mod} x \geqslant \eta$, $|R_m(x)|$, $|S_m(x)|$ are both less than some fixed positive number independent of x.

Since

$$x^{\frac{1}{2}} J_m(x) = \frac{x^{m+\frac{1}{2}}}{2^m \Pi(m)} \left\{ 1 - \frac{x^2}{2.2m+2} + \frac{x^4}{2.4.2m+2.2m+4} - \dots \right\},$$

we see that, when $m \geqslant -\frac{1}{2}$,

$$|x^{\frac{1}{2}} J_m(x)| < \frac{r^{m+\frac{1}{2}}}{2^m \Pi(m)} \left\{ 1 + \frac{r^2}{1.2} + \frac{r^4}{1.2.3.4} + \dots \right\}.$$

From this, it follows that, provided $m > -\frac{1}{2}$, for all values of x, such that $\operatorname{mod} x$, or r, is less than an arbitrarily chosen number η_1, $|x^{\frac{1}{2}} J_m(x)|$ is less than some fixed positive number N_1 independent of x.

If $x = s + \iota t$, where t is positive or zero, and s is positive or zero, we see from the formula (4), that

$$x^{\frac{1}{2}} J_m(x) = \frac{1}{(2\pi)^{\frac{1}{2}}} \left\{ e^{\iota(\frac{1}{2}m\pi + \frac{1}{4}\pi - s)} e^t P_m(x) + e^{-\iota(\frac{1}{2}m\pi + \frac{1}{4}\pi - s)} e^{-t} P_m(-x) \right\}.$$

Since $|P_m(x)|$, $|P_m(-x)|$ are less than fixed positive numbers inde-

pendent of x for all values of x, such that $\mod x \geqslant \eta$, we see that

$$|x^{\frac{1}{2}}J_m(x)| < M_1e^t+M_2e^{-t} < (M_1+M_2)e^t,$$

for $\mod x \geqslant \eta$; where M_1, M_2 are positive numbers independent of x.

It now follows that $|x^{\frac{1}{2}}J_m(x)| < Ne^t$, for all values of x ($\equiv s+\iota t$) of which the real part is positive or zero; the number N being the greater of the two numbers N_1, M_1+M_2, and being therefore independent of x, s, and t.

3. The characteristic values of λ are given as the roots of the equation

$$\lambda^{\frac{1}{2}}J'_m(\lambda^{\frac{1}{2}})+HJ_m(\lambda^{\frac{1}{2}}) = 0,$$

which reduces to $J'_m(\lambda^{\frac{1}{2}}) = 0$, in the case $H = 0$, and to $J_m(\lambda^{\frac{1}{2}}) = 0$, in the case $H = \infty$. The value $\lambda = 0$ is admissible only in the case $H = -m$, when the equation is equivalent to $J_{m+1}(\lambda^{\frac{1}{2}}) = 0$. It is clear that, if $\lambda^{\frac{1}{2}}$ is a root of the equation, $-\lambda^{\frac{1}{2}}$ is also a root; and thus we need attend only to the positive roots.

We may use for $J_m(\lambda^{\frac{1}{2}})$, $J'_m(\lambda^{\frac{1}{2}})$, the expressions

$$\left(\frac{2}{\pi\lambda^{\frac{1}{2}}}\right)^{\frac{1}{2}}\left\{\cos(\tfrac{1}{2}m\pi+\tfrac{1}{4}\pi-\lambda^{\frac{1}{2}})+\frac{\alpha(\lambda)}{\lambda^{\frac{1}{2}}}\right\},$$

$$\left(\frac{2}{\pi\lambda^{\frac{1}{2}}}\right)^{\frac{1}{2}}\left\{\sin(\tfrac{1}{2}m\pi+\tfrac{1}{4}\pi-\lambda^{\frac{1}{2}})+\frac{\alpha(\lambda)}{\lambda^{\frac{1}{2}}}\right\},$$

where $\alpha(\lambda)$ denotes in each case some number which is less in absolute value than some fixed number independent of λ, provided λ exceeds some fixed positive number as small as we please. The function $\alpha(\lambda)$ does not denote the same function in the two cases, and it will be used throughout in this manner to denote a variety of functions which are all limited for all sufficiently large values of the variable.

We can now write the characteristic equation in the form

$$\sin(\tfrac{1}{2}m\pi+\tfrac{1}{4}\pi-\lambda^{\frac{1}{2}}) = \lambda^{-\frac{1}{2}}\alpha(\lambda),$$

except that in the case $H = \infty$, it takes the form

$$\cos(\tfrac{1}{2}m\pi+\tfrac{1}{4}\pi-\lambda^{\frac{1}{2}}) = \lambda^{-\frac{1}{2}}\alpha(\lambda).$$

By considering large values of λ, and then including all the values of λ in the same expression, we see that all the values $\lambda_1^{\frac{1}{2}}, \lambda_2^{\frac{1}{2}}, \ldots, \lambda_n^{\frac{1}{2}}, \ldots$ of $\lambda^{\frac{1}{2}}$ are given by

$$\lambda_n^{\frac{1}{2}} = \kappa+n\pi+n^{-1}\alpha(n), \quad \text{where} \quad \kappa = \tfrac{1}{2}m\pi+\tfrac{1}{4}\pi+s\pi, \tag{5}$$

and s denotes a fixed positive or negative integer. In the case $H = \infty$,

the number κ must be replaced by $\frac{1}{2}m\pi+\frac{3}{4}\pi+s\pi$. The number κ is independent of n, and $\alpha(n)$ is limited for all values of n.

Referring to the expression (3) for $\phi_n(x)$, we see that

$$\left(1-\frac{m^2}{\lambda}\right) J_m^2(\lambda^{\frac{1}{2}})+J_m'^2(\lambda^{\frac{1}{2}})$$

is of the form $$\frac{2}{\pi\lambda^{\frac{1}{2}}}\left\{1+\frac{\alpha(\lambda)}{\lambda^{\frac{1}{2}}}\right\},$$

and therefore $\phi_n(x)$ is of the form

$$\left(\frac{1}{2}\ \pi\lambda^{\frac{1}{2}}\right)^{\frac{1}{2}} J_m(\lambda^{\frac{1}{2}}x^{\frac{1}{2}})\left\{1+\frac{\alpha(\lambda)}{\lambda^{\frac{1}{2}}}\right\}.$$

On substitution of the value of $J_m(\lambda^{\frac{1}{2}}x^{\frac{1}{2}})$, we find for $\phi_n(x)$ the expression

$$x^{-\frac{1}{4}}\left[\cos\left\{\tfrac{1}{2}m\pi+\tfrac{1}{4}\pi-(\kappa+n\pi)x^{\frac{1}{2}}\right\}+n^{-1}\alpha(n,x)\right], \tag{6}$$

where $\alpha(n,x)$ is limited for all values of n, and for all values of x in an interval $(\epsilon, 1)$, where ϵ is a positive number. An expression for $\phi_n(x)$ of a more detailed character, which will be required later, is obtained from the expression for $J_m(x)$ obtained in § 2; we find that

$$\phi_n(x)=\frac{1}{x^{\frac{1}{4}}}\left[\left\{1+\frac{\alpha(n,x)}{n}\right\}\cos\left\{\tfrac{1}{2}m\pi+\tfrac{1}{4}\pi-(\kappa+n\pi)x^{\frac{1}{2}}\right\}+\frac{\alpha(n,x)}{n}\sin\left\{\tfrac{1}{2}m\pi+\tfrac{1}{4}\pi-(\kappa+n\pi)x^{\frac{1}{2}}\right\}\right]. \tag{7}$$

4. If, in the differential equation

$$\frac{d}{dx}\left(4x\ \frac{dy}{dx}\right)+\left(\lambda-\frac{m^2}{x}\right)y=0$$

we write $\lambda=\mu+\beta^2$, where β is any fixed number, the differential equation becomes

$$\frac{d}{dx}\left(4x\ \frac{dy}{dx}\right)+\left(\beta^2-\frac{m^2}{x}\right)y+\mu y=0,$$

in which we now regard μ as the parameter. The characteristic values of μ will be the values of $\lambda-\beta^2$, where λ has the values determined by the equation (2), as in § 3.

In order to determine the nucleus of the integral equation for which the values of μ are the characteristic values, we take

$$\phi(x)=CJ_m(\beta x^{\frac{1}{2}}),\qquad \psi(x)=AJ_m(\beta x^{\frac{1}{2}})+BY_m(\beta x^{\frac{1}{2}}),$$

two independent solutions of the differential equation

$$\frac{d}{dx}\left(4x\ \frac{dy}{dx}\right)+\left(\beta^2-\frac{m^2}{x}\right)y=0;$$

where the constants A, B, C are so determined* that

$$4x\{\phi'(x)\,\psi(x)-\phi(x)\,\psi'(x)\}=1,$$

and that

$$\psi'(x)+\tfrac{1}{2}H\psi(x)=0,$$

when $x=1$. The first of these equations is equivalent to

$$2\beta x^{\frac{1}{2}}BC\{J'_m(\beta x^{\frac{1}{2}})\,Y_m(\beta x^{\frac{1}{2}})-J_m(\beta x^{\frac{1}{2}})\,Y'_m(\beta x^{\frac{1}{2}})\}=1,$$

and this reduces, by using the known relation between the two Bessel's functions and their derivatives, to $2BC=e^{-m\pi\iota}\cos m\pi$. The other equation is

$$A\{\beta J'_m(\beta)+HJ_m(\beta)\}+B\{\beta Y'_m(\beta)+HY_m(\beta)\}=0,$$

and thus we may take

$$A=\beta Y'_m(\beta)+HY_m(\beta),\qquad B=-\{\beta J'_m(\beta)+HJ_m(\beta)\},$$

and therefore we have

$$C=-\frac{\tfrac{1}{2}e^{-m\pi\iota}\cos m\pi}{\beta J'_m(\beta)+HJ_m(\beta)}.$$

The value of the nucleus $K(x,x')$, for $x\leqslant x'$ is $\phi(x)\,\psi(x')$ or

$$\frac{-\tfrac{1}{2}e^{m\pi\iota}\cos m\pi}{\beta J'_m(\beta)+HJ_m(\beta)}\,J_m(\beta x^{\frac{1}{2}})[\beta\{J_m(\beta x'^{\frac{1}{2}})\,Y'_m(\beta)-Y_m(\beta x'^{\frac{1}{2}})\,J'_m(\beta)\}$$
$$+H\{J_m(\beta x'^{\frac{1}{2}})\,Y_m(\beta)-Y_m(\beta x'^{\frac{1}{2}})\,J_m(\beta)\}]. \quad (8)$$

In case $x'\leqslant x$, an interchange of x with x' must be made in the expression.

It will now be shewn that, for all values of x and x' in any interval $(\epsilon, 1)$ which does not contain the point $x=0$, the series

$$\sum_{n=1}^{\infty}\frac{\phi_n(x)\,\phi_n(x')}{\mu_n}\quad\text{or}\quad\sum_{n=1}^{\infty}\frac{\phi_n(x)\,\phi_n(x')}{\lambda_n-\beta^2}$$

converges uniformly to the value $K(x,x')$. The number β is supposed to have been so chosen that μ_n is, for every value of n, different from zero. This result does not follow immediately from the fundamental theorem of the theory of integral equations for the representation of the nucleus, because, as is seen from the expression (8), $K(x,x')$ is not continuous for $x'=0$. It has, however, been shewn by Kneser† that, in order to establish it, we have only to verify (1) that the series

$$\sum_{n=1}^{\infty}\frac{\phi_n(x)\,\phi_n(x')}{\mu_n^2}$$

* See Kneser, *Math. Annalen*, Vol. LXIII., p. 483.

† *Ibid.*, pp. 487–489.

converges uniformly for all values of x and x' in the interval (0, 1), and (2) that the series

$$\sum_{n=1}^{\infty} \frac{\phi_n'(x)\,\phi_n(x')}{\mu_n^2}, \qquad \sum_{n=1}^{\infty} \frac{\phi_n(x)\,\phi_n(x')}{\mu_n}$$

are both uniformly convergent for all values of x and x' in any interval $(\epsilon, 1)$, where $\epsilon > 0$.

To shew that the condition (1) is satisfied, we see from the expression for $\phi_n(x)$, obtained in § 3, that the series is of the form

$$\Sigma \tfrac{1}{2}\pi\lambda^{\frac{1}{2}} \frac{J_m(\lambda^{\frac{1}{2}}x^{\frac{1}{2}})\,J_m(\lambda^{\frac{1}{2}}x'^{\frac{1}{2}})}{(\lambda-\beta^2)^2} \left\{1+\frac{a(\lambda)}{\lambda}\right\}.$$

Since $J_m(\lambda^{\frac{1}{2}}x^{\frac{1}{2}})$, $J_m(\lambda^{\frac{1}{2}}x'^{\frac{1}{2}})$ are limited functions for all real positive values of $\lambda^{\frac{1}{2}}$, x, and x'; and, since λ is of the form $\{\kappa+n\pi+n^{-1}a(n)\}^2$ or $n^2\pi^2\{1+n^{-1}a(n)\}$, it is easily seen that the series converges uniformly for all values of x and x' in the interval (0, 1), for any fixed value of β which does not coincide with a characteristice value of $\lambda^{\frac{1}{2}}$.

To shew that the series $\sum_{n=1}^{\infty} \frac{\phi_n(x)\,\phi_n(x')}{\mu_n}$ is uniformly convergent for all values of x and x' in an interval $(\epsilon, 1)$, where $\epsilon > 0$, we see from the the expression (6), for $\phi_n(x)$, that the series takes the form

$$\frac{1}{(xx')^{\frac{1}{4}}} \sum_{n=1}^{\infty} \frac{1}{n^2\pi^2} \left\{1+\frac{a(n)}{n}\right\} \left[\cos\left\{\tfrac{1}{2}m\pi+\tfrac{1}{4}\pi-(\kappa+n\pi)x^{\frac{1}{2}}\right\}+\frac{a(n,x)}{n}\right]$$

$$\left[\cos\left\{\tfrac{1}{2}m\pi+\tfrac{1}{4}\pi-(\kappa+n\pi)x'^{\frac{1}{2}}\right\}+\frac{a(n,x')}{n}\right].$$

On account of the factors $\frac{1}{n^2}$, $\frac{1}{n^3}$, $\frac{1}{n^4}$, in the different parts of the general term of the series, it is clear that the series is uniformly convergent.

To shew that the series $\sum_{n=1}^{\infty} \frac{\phi_n'(x)\,\phi_n(x')}{\mu_n^2}$ is uniformly convergent for all values of x and x' in the interval $(\epsilon, 1)$, we see that the series is of the form

$$\frac{1}{2x^{\frac{3}{4}}x'^{\frac{1}{4}}} \sum_{n=1}^{\infty} \frac{1}{n^3\pi^3} \left\{1+\frac{a(n)}{n}\right\} \left[\sin\left\{\tfrac{1}{2}m\pi+\tfrac{1}{4}\pi-(\kappa+n\pi)x^{\frac{1}{2}}\right\}+\frac{a(n,x)}{n}\right]$$

$$\left[\cos\left\{\tfrac{1}{2}m\pi+\tfrac{1}{4}\pi-(\kappa+n\pi)x'^{\frac{1}{2}}\right\}+\frac{a(n,x')}{n}\right];$$

it is clear that this series is uniformly convergent on account of the factors $\frac{1}{n^3}$, $\frac{1}{n^4}$, ... in the different parts of the general term.

It has now been established that, for any fixed real value of β, which is not equal to one of the characteristic values of $\lambda^{\frac{1}{2}}$, the series

$$\sum_{n=1}^{\infty} \frac{\phi_n(x)\,\phi_n(x')}{\lambda_n - \beta^2}$$

converges to the value $K(x, x')$ for all values of x and x' in the interval (0, 1) except the value zero.

5. From the fact that the series $\sum_{n=1}^{\infty} \frac{\phi_n(x)\,\phi_n(x')}{\lambda_n - \beta^2}$ converges to the value $K(x, x')$ for any real value of β such that β^2 is not equal to λ_n for any value of n, we infer that, for complex values of β of which the real part is positive, the series also converges to the value

$$\frac{-\frac{1}{2}e^{m\pi\iota}\cos m\pi}{\beta J'_m(\beta) + H J_m(\beta)}\, J_m(\beta x^{\frac{1}{2}}) \left[\beta \left\{J_m(\beta x'^{\frac{1}{2}})\, Y'_m(\beta) - Y_m(\beta x'^{\frac{1}{2}})\, J'_m(\beta)\right\}\right.$$
$$\left. + H \left\{J_m(\beta x'^{\frac{1}{2}})\, Y_m(\beta) - Y_m(\beta x'^{\frac{1}{2}})\, J_m(\beta)\right\}\right],$$

provided $x \leqslant x'$.

For a value of β on the negative side of the imaginary axis, the series converges to the same value as for the value $-\beta$. The series

$$\sum_{n=1}^{\infty} \phi_r(x)\,\phi_r(x') \left(\frac{1}{\beta + \lambda_n^{\frac{1}{2}}} + \frac{1}{\beta - \lambda_n^{\frac{1}{2}}}\right)$$

consequently represents the function $-2\beta K(x, x')$, for $0 < x < x'$, and for all values of β of which the real part is positive or zero. By the theory of residues we see that $2\sum_{r=1}^{r=n} \phi_r(x)\,\phi_r(x')$ is equal to $\frac{1}{2\pi\iota}$ times the integral taken round a closed contour which includes in its interior the $2n$ points $\pm\lambda_1^{\frac{1}{2}}, \pm\lambda_2^{\frac{1}{2}}, \ldots, \pm\lambda_n^{\frac{1}{2}}$ of the function $F(\beta)$ which is represented by $-2\beta K(x, x')$ for values of β of which the real part is positive or zero, and which is such that $F(-\beta) = -F(\beta)$. Taking as the path of integration the rectangle of which the corners are the four points $\pm\sigma \pm \iota\tau$, and which encloses exactly $2n$ of the characteristic points $\pm\lambda^{\frac{1}{2}}$, and making use of the fact that conjugate values of $F(\beta)$ correspond to conjugate values of β, and that $F(-\beta) = -F(\beta)$, we see that

$$\sum_{r=1}^{r=n} \phi_r(x)\,\phi_r(x')$$

is equal to the real part of

$$\frac{1}{2\pi}\int_0^{\tau} F(\sigma + \iota t)\,dt - \frac{1}{2\pi\iota}\int_0^{\sigma} F(s + \iota\tau)\,ds.$$

Thence we see that $\left|\sum_{r=1}^{r=n} \phi_r(x)\,\phi_r(x')\right|$

is less than $$\frac{1}{2\pi}\int_0^\tau |F(\sigma+\iota t)|\,dt+\frac{1}{2\pi}\int_0^\sigma |F(s+\iota\tau)|\,ds,$$

where $F(\beta)$ denotes the expression

$$\frac{-e^{m\pi\iota}\cos m\pi}{\beta J'_m(\beta)+HJ_m(\beta)}\ \beta J_m(\beta x^{\frac12})\left[\beta\left\{J_m(\beta x'^{\frac12})\,Y'_m(\beta)-Y_m(\beta x'^{\frac12})\,J'_m(\beta)\right\}\right.$$
$$\left.+H\left\{J_m(\beta x'^{\frac12})\,Y_m(\beta)-Y_m(\beta x'^{\frac12})\,J_m(\beta)\right\}\right].$$

Let us now assume that σ is chosen to be $\kappa+n\pi+\frac12\pi$, n being chosen so large that $n^{-1}\alpha(n)$ in the expression $\kappa+n\pi+n^{-1}\alpha(n)$ for $\lambda_n^{\frac12}$ is numerically less than $\frac12\pi$. The side of the rectangle thus avoids the neighbourhood of the point $\lambda_n^{\frac12}$.

We have now, for $\beta=\sigma+\iota t$, where $t\geqslant 0$,

$$(2\pi\beta)^{\frac12}\left\{J'_m(\beta)+\frac{H}{\beta}J_m(\beta)\right\}=\pm\iota e^t\left[\frac{m}{\beta}\,P_m(\beta)-\iota P_{m+1}(\beta)\right]$$
$$\mp\iota e^{-t}\left[\frac{m}{\beta}\,P_m(-\beta)+\iota P_{m+1}(\beta)\right]$$
$$\pm\iota e^t P_m(\beta)\pm\iota e^{-t}\frac{H}{\beta}\,P_m(-\beta)$$
$$=\pm e^t\left[P_{m+1}(\beta)+\iota\,\frac{H+m}{\beta}\,P_m(\beta)\right]$$
$$\pm e^{-t}\left[P_{m+1}(\beta)+\iota\,\frac{H-m}{\beta}\,P_m(-\beta)\right].$$

It has been shewn, in § 2, that $P_{m+1}(\beta)$ has the limit unity as $|\beta|$ is indefinitely increased; we thus see that, for a sufficiently large value of β, the expression on the right-hand side has a real part of the form $\pm e^t(1+\eta)\pm e^{-t}(1+\xi)$, where η and ξ are numerically less than an arbitrarily chosen number as small as we please. It follows that

$$\left|(2\pi\beta)^{\frac12}\left\{J'_m(\beta)+\frac{H}{\beta}\,J_m(\beta)\right\}\right|$$

exceeds $$e^t(1+e^{-2t}+\eta+\xi e^{-2t}).$$

If, now, σ exceed some fixed value, we shall have $|\eta+\xi e^{-2t}|<\frac12$ for for all positive values of t; it then follows that

$$\left|(2\pi\beta)^{\frac12}\left\{J'_m(\beta)+\frac{H}{\beta}\,J_m(\beta)\right\}\right|>\tfrac12 e^t.$$

In the case $H = \infty$, we can shew in a similar manner that

$$|(2\pi\beta)^{\frac{1}{2}} J_m(\beta)| > \tfrac{1}{2}e^t,$$

for all positive values of t, provided σ is sufficiently large.

When we take $\beta = s+\iota\tau$, where τ is fixed, and s varies between 0 and σ, we have

$$\begin{aligned}(2\pi\beta)^{\frac{1}{2}}\left\{J'_m(\beta)+\frac{H}{\beta}J_m(\beta)\right\} = {} & e^{\tau}e^{\iota(\frac{1}{2}m\pi+\frac{1}{4}\pi-s)}\left[\frac{m}{\beta}P_m(\beta)-\iota P_{m+1}(\beta)\right] \\ & +e^{-\tau}e^{-\iota(\frac{1}{2}m\pi+\frac{1}{4}\pi-s)}\left[\frac{m}{\beta}P_m(-\beta)+\iota P_{m+1}(\beta)\right] \\ & +e^{\tau}e^{\iota(\frac{1}{2}m\pi+\frac{1}{4}\pi-s)}P_m(\beta)+e^{-\tau}e^{-\iota(\frac{1}{2}m\pi+\frac{1}{4}\pi-s)}P_m(-\beta);\end{aligned}$$

hence we find that

$$(2\pi\beta)^{\frac{1}{2}}\left\{J'_m(\beta)+\frac{H}{\beta}J_m(\beta)\right\} = Ae^{\tau}+Be^{-\tau},$$

where $|A|$, $|B|$ can be made as nearly equal to unity as we please by taking a large enough value of τ. Also $|B|$ is less than some fixed positive number p, if $|\beta|$ exceeds a fixed value. We thus see that

$$\left|(2\pi\beta)^{\frac{1}{2}}\left\{J'_m(\beta)+\frac{H}{\beta}J_m(\beta)\right\}\right| > \tfrac{1}{2}e^{\tau}-pe^{-\tau},$$

for all values of s, provided τ is sufficiently large. If now τ be further increased, if necessary, so that $pe^{-2\tau} < \frac{1}{4}$, we see that

$$\left|(2\pi\beta)^{\frac{1}{2}}\left\{J'_m(\beta)+\frac{H}{\beta}J_m(\beta)\right\}\right| > \tfrac{1}{4}e^{\tau},$$

provided τ have a sufficiently large value; and this holds for all positive values of s.

In the case $H = \infty$, we can prove in a similar manner that

$$|(2\pi\beta)^{\frac{1}{2}} J_m(\beta)| > \tfrac{1}{4}e^{\tau},$$

for all sufficiently large values of τ, and for all positive values of s.

An inferior limit for the values of

$$\left|(2\pi\beta)^{\frac{1}{2}}\left\{J'_m(\beta)+\frac{H}{\beta}J_m(\beta)\right\}\right|,$$

or in the case $H = \infty$, of $|(2\pi\beta)^{\frac{1}{2}} J_m(\beta)|$, has now been found for its values as they occur in the integrands of the two integrals

$$\int_0^{\tau}|F(\sigma+\iota t)|\,dt, \qquad \int_0^{\sigma}|F(s+\iota\tau)|\,ds,$$

provided the values of σ and τ are subject to the conditions indicated above.

It has been shewn in § 2 that $|\beta^{\frac{1}{2}}x^{\frac{1}{4}}J_m(\beta x^{\frac{1}{2}})| < Ne^{\iota x^{\frac{1}{4}}}$, where $\beta = s+\iota t$, and N is independent of β and of x, and $0 \leqslant x \leqslant 1$. Let it now be assumed that $x'-x \geqslant \mu$, where μ is some fixed positive number; we have then

$$x'^{\frac{1}{2}}-x^{\frac{1}{2}} \geqslant \frac{\mu}{x'^{\frac{1}{2}}+x^{\frac{1}{2}}} \geqslant \tfrac{1}{2}\mu.$$

We now see that, on substitution of the values of the functions given in § 2,

$$\{\beta^{\frac{1}{2}}x'^{\frac{1}{4}}J_m(\beta x'^{\frac{1}{2}})\,\beta^{\frac{1}{2}}Y'_m(\beta)-\beta^{\frac{1}{2}}x'^{\frac{1}{4}}Y_m(\beta x'^{\frac{1}{2}})\,\beta^{\frac{1}{2}}J'_m(\beta)\}$$

$$+\frac{H}{\beta}\{\beta^{\frac{1}{2}}x'^{\frac{1}{4}}J_m(\beta x'^{\frac{1}{2}})\,\beta^{\frac{1}{2}}Y_m(\beta)-\beta^{\frac{1}{2}}x'^{\frac{1}{4}}Y_m(\beta x'^{\frac{1}{2}})\,\beta^{\frac{1}{2}}J_m(\beta)\}$$

takes the form

$$\tfrac{1}{2}\iota e^{m\pi\iota}\sec m\pi\,[e^{\iota\beta(1-x'^{\frac{1}{2}})}P_m(\beta x'^{\frac{1}{2}})\,S_m(\beta)-e^{-\iota\beta(1-x'^{\frac{1}{2}})}P_m(-\beta x'^{\frac{1}{2}})\,R_m(\beta)]$$

$$+\frac{H}{\beta}\,\tfrac{1}{2}\iota e^{m\pi\iota}\sec m\pi\,[e^{\iota\beta(1-x'^{\frac{1}{2}})}P_m(\beta x'^{\frac{1}{2}})\,P_m(-\beta)-e^{-\iota\beta(1-x'^{\frac{1}{2}})}P_m(-\beta x'^{\frac{1}{2}})\,P_m(\beta)].$$

Since $|\beta x'^{\frac{1}{2}}|$ is always greater than some fixed positive number, in consequence of the fact that $x'^{\frac{1}{2}} > \frac{1}{2}\mu$, and since $|P_m(\pm\beta x'^{\frac{1}{2}})|$, $|R_m(\beta)|$, $|S_m(\beta)|$ are, as has been shewn in § 2, all less than fixed positive numbers independent of β and x', we see that, for $\beta=s+\iota t$, the modulus of the expression is less than $Ae^{(1-x'^{\frac{1}{2}})t}+Be^{-(1-x'^{\frac{1}{2}})t}$, where A and B are positive numbers independent of x' and β. It follows that the modulus of the expression is less than $Ke^{(1-x'^{\frac{1}{2}})t}$, where $K = A+B$. In the case $H = \infty$, we can prove, in a similar manner, that

$$|\beta^{\frac{1}{2}}x'^{\frac{1}{4}}J_m(\beta x'^{\frac{1}{2}})\,\beta^{\frac{1}{2}}Y_m(\beta)-\beta^{\frac{1}{2}}x'^{\frac{1}{4}}Y_m(\beta x'^{\frac{1}{2}})\,\beta^{\frac{1}{2}}J_m(\beta)| < K'e^{(1-x'^{\frac{1}{2}})t},$$

where K' is a positive number, independent of x' and β.

We have now, by the use of the inequalities which have been established,

$$\left|(xx')^{\frac{1}{4}}\sum_{r=1}^{r=n}\phi_r(x)\,\phi_r(x')\right| < L\int_0^T e^{-(x'^{\frac{1}{2}}-x^{\frac{1}{2}})t}\,dt+M\sigma e^{-(x'^{\frac{1}{2}}-x^{\frac{1}{2}})\tau},$$

where L and M are fixed positive numbers. This has been proved on the assumption that n is greater than some fixed value n_1, so that the values of σ and τ are sufficiently great for the validity of the inequalities employed. If σ have a fixed value, we may choose a value of τ, independent of x and x', such that $M\sigma e^{-(x'^{\frac{1}{2}}-x^{\frac{1}{2}})\tau}$ is less than a fixed positive number m, since $x'^{\frac{1}{2}}-x^{\frac{1}{2}} > \frac{1}{2}\mu$.

Also, since $$\int_0^\tau e^{-(x'^{\frac{1}{2}}-x^{\frac{1}{2}})t}dt = \frac{1-e^{-(x'^{\frac{1}{2}}-x^{\frac{1}{2}})\tau}}{x'^{\frac{1}{2}}-x^{\frac{1}{2}}} < \frac{2}{\mu},$$

we see that $$L\int_0^\tau e^{-(x'^{\frac{1}{2}}-x^{\frac{1}{2}})t}dt < \frac{2L}{\mu}.$$

It follows that, if $n > n_1$,

$$\left|(xx')^{\frac{1}{4}}\sum_{r=1}^{r=n}\phi_r(x)\,\phi_r(x')\right| < m+\frac{2L}{\mu},$$

which is independent of x and x'. It has been assumed that $x > 0$, $x'-x \geqslant \mu$; but the inequality clearly holds also for $x = 0$, $x'-x \geqslant \mu$, since

$$\left|(xx')^{\frac{1}{4}}\sum_{r=1}^{r=n}\phi_r(x)\,\phi_r(x')\right|$$

vanishes when $x = 0$. As the number of values of the expression for $n \leqslant n_1$ is finite, it follows that, *for all values of* n,

$$\left|(xx')^{\frac{1}{4}}\sum_{r=1}^{r=n}\phi_r(x)\,\phi_r(x')\right|$$

is less than some fixed positive number, independent of x *and* x', *for all values of* x *and* x' *in the interval* (0, 1) *and such that* $x'-x \geqslant \mu$. *Since* x, x' *may be interchanged, the last condition may be replaced by* $|x'-x| \geqslant \mu$.

6. In order to shew that the general convergence theorem already referred to is applicable to the function

$$F(x', x, n) = (xx')^{\frac{1}{4}}\sum_{r=1}^{r=n}\phi_r(x)\,\phi_r(x'),$$

it is necessary to shew that, if x be now confined to an interval $(\xi, 1)$, where $0 < \xi < 1$, and if α, β are in the interval (0, 1), $\int_\alpha^\beta F(x', x, n)dx'$ is numerically less than a fixed positive number A_n, independent of α, β, and x, provided x is not interior to the interval $(\alpha-\mu, \beta+\mu)$, and is in the interval $(\xi, 1)$, all the points of which then constitute the set G of the general convergence theorem. This is equivalent to shewing that, if ϵ be a fixed positive number, arbitrarily small, a value n_1 of n can be determined such that

$$\left|\int_\alpha^\beta F(x', x, n)dx'\right| < \epsilon,$$

for every value of $n \geqslant n_1$, for all values of α, β in (0, 1), and for all values of x in $(\xi, 1)$ and not interior to the interval $(\alpha-\mu, \beta+\mu)$.

Since $$\left|(xx')^{\frac{1}{2}}\sum_{r=1}^{r=n}\phi_r(x)\,\phi_r(x')\right| < \bar{F},$$

if $|x-x'| \geqslant \mu$, we see that, if $\eta < \dfrac{\epsilon}{2\bar{F}}$,

then $$\left|\int_0^\eta F(x', x, n)\,dx'\right| < \tfrac{1}{2}\epsilon,$$

for all values of n, and for all values of $x \geqslant \eta+\mu$. It is clear that η can be so chosen as to be less than μ. In case $0 \leqslant \alpha < \eta < \beta$, we have

$$\left|\int_\alpha^\beta F(x', x, n)\,dx'\right| < \tfrac{1}{2}\epsilon + \left|\int_\eta^\beta F(x', x, n)\,dx'\right|;$$

and, if $0 \leqslant \alpha < \beta < \eta$, we have

$$\left|\int_\alpha^\beta F(x', x, n)\,dx'\right| < \tfrac{1}{2}\epsilon,$$

for all values of n. It will therefore be sufficient to prove that

$$\left|\int_\alpha^\beta F(x', x, n)\,dx'\right| < \tfrac{1}{2}\epsilon,$$

for $n \geqslant n_1$, where α is now restricted to be $\geqslant \eta$.

Using Bonnet's form of the second mean value theorem, we see that

$$\int_\alpha^\beta (xx')^{\frac{1}{2}}\sum_{r=1}^{r=n}\phi_r(x)\,\phi_r(x')\,dx' = (x\beta)^{\frac{1}{2}}\int_\gamma^\beta \sum_{r=1}^{r=n}\phi_r(x)\,\phi_r(x')\,dx',$$

where γ is some number such that $\alpha \leqslant \gamma \leqslant \beta$. Since $(x\beta)^{\frac{1}{2}} < 1$, it will be sufficient for our purpose if we prove that

$$\left|\int_{\alpha'}^{\beta'}\sum_{r=1}^{r=n}\phi_r(x)\,\phi_r(x')\,dx'\right| < \tfrac{1}{2}\epsilon,$$

for $\qquad n \geqslant n_1, \quad \alpha' \geqslant \eta, \quad |x-x'| \geqslant \mu, \quad \xi \leqslant x \leqslant 1.$

By using the differential equation satisfied by the functions $\phi_r(x)$, we have

$$\begin{aligned}
&\int_{\alpha'}^{\beta'}\sum_{r=1}^{r=n}\phi_r(x)\,\phi_r(x')\,dx' \\
&\quad = \int_{\alpha'}^{\beta'}\sum_{r=1}^{r=n}\frac{\phi_r(x)}{\mu_r}\left[\left(\frac{m^2}{x'}-\beta^2\right)\phi_r(x') - \frac{d}{dx'}\left\{4x'\,\phi_r'(x')\right\}\right]dx' \\
&\quad = \int_{\alpha'}^{\beta'}\left(\frac{m^2}{x'}-\beta^2\right)\sum_{r=1}^{r=n}\frac{\phi_r(x)\,\phi_r(x')}{\mu_r}\,dx' \\
&\qquad\qquad - \left\{4\beta'\sum_{r=1}^{r=n}\frac{\phi_r(x)\,\phi_r'(\beta)}{\mu_r} - 4\alpha'\sum_{r=1}^{r=n}\frac{\phi_r(x)\,\phi_r'(\alpha')}{\mu_r}\right\},
\end{aligned}$$

where β denotes a fixed number, as in § 4, and $\mu_r = \lambda_r - \beta^2$.

It has already been shewn that, if x' is in the interval $(\eta, 1)$, and x in the interval $(\xi, 1)$, $\sum_{r=1}^{r=n} \frac{\phi_r(x)\,\phi_r(x')}{\mu_r}$ converges uniformly, as n is indefinitely increased, to the value $K(x, x')$. It will here be shewn that, for all such values of x and x', which also satisfy the condition $|x-x'| \geqslant \mu$, the series $\sum_{r=1}^{r=n} \frac{\phi_r(x)\,\phi_r'(x')}{\mu_r}$ converges, as n is indefinitely increased, uniformly to the value $\frac{dK(x, x')}{dx'}$.

The series $\sum_{r=1} \frac{\phi_r(x)\,\phi_r'(x')}{\mu_r}$ is of the form

$$\frac{1}{(xx')^{\frac{1}{4}}} \frac{1}{2\pi x'^{\frac{1}{2}}} \sum_{r=1} \frac{1}{r} \left\{1+\frac{\alpha(r)}{r}\right\}$$

$$\left[\cos(\tfrac{1}{2}m\pi+\tfrac{1}{4}\pi)\cos(\kappa+r\pi)x^{\frac{1}{2}}+\sin(\tfrac{1}{2}m\pi+\tfrac{1}{4}\pi)\sin(\kappa+r\pi)x^{\frac{1}{2}}+\frac{\alpha(r)}{r}\right]$$

$$\left[\sin(\tfrac{1}{2}m\pi+\tfrac{1}{4}\pi)\cos(\kappa+r\pi)x'^{\frac{1}{2}}-\cos(\tfrac{1}{2}m\pi+\tfrac{1}{4}\pi)\sin(\kappa+r\pi)x'^{\frac{1}{2}}+\frac{\alpha(r)}{r}\right].$$

Of the different portions into which this series may be split up, the series

$$\Sigma \frac{1}{r} \cos(r\pi+\kappa)(x^{\frac{1}{2}} \pm x'^{\frac{1}{2}}), \qquad \Sigma \frac{1}{r} \sin(r\pi+\kappa)(x^{\frac{1}{2}} \pm x'^{\frac{1}{2}})$$

are uniformly convergent, since $0 < \frac{1}{2}\mu \leqslant |x^{\frac{1}{2}} \pm x'^{\frac{1}{2}}| \leqslant 2-\frac{1}{2}\mu$. The remaining series formed by multiplying out the above product are uniformly convergent in the whole interval $(0, 1)$. It follows that $\sum_{r=1}^{r} \frac{\phi_r(x)\,\phi_r'(x')}{\mu_r}$ is uniformly convergent for all values of x' in the interval $(\eta, 1)$, and of x in $(\xi, 1)$, such that $|x-x'| \geqslant \mu$. Hence, by a well known theorem, the series converges for all such values of x and x' to the value $\frac{d}{dx'} K(x, x')$.

Since $\Sigma \frac{\phi_r(x)\,\phi_r(x')}{\mu_r}$ converges uniformly in the interval $(\eta, 1)$ of x' to the value $K(x, x')$, a value n_2 of n can be so chosen that

$$\left| \int_{\alpha'}^{\beta'} \left(\frac{m^2}{x'} - \beta^2\right) K(x, x')\,dx' - \int_{\alpha'}^{\beta'} \left(\frac{m^2}{x'} - \beta^2\right) \sum_{r=1}^{r=n} \frac{\phi_r(x)\,\phi(x')}{\mu_r}\,dx' \right| < \tfrac{1}{4}\epsilon$$

for $n \geqslant n_2$, and for all values of α', β' in the interval $(\eta, 1)$.

Also, a value n_3 of n can be so chosen that

$$\left| 4\beta' \sum_{r=1}^{r=n} \frac{\phi_r(x)\,\phi_r'(\beta')}{\mu_r} - 4\alpha' \sum_{r=1}^{r=n} \frac{\phi_r(x)\,\phi_r'(\alpha')}{\mu_r} \right.$$

$$\left. - 4\beta' \frac{d}{d\beta'} K(x, \beta') + 4\alpha' \frac{d}{d\alpha} K(x, \alpha') \right| < \tfrac{1}{4}\epsilon$$

for all values of α', β' in the interval $(\eta, 1)$, and for all values of x belonging to the interval $(\xi, 1)$, and not interior to the interval $(\alpha'-\mu, \beta'+\mu)$, provided $n \geqslant n_3$.

If, now, n_1 denote the greater of the two integers n_2, n_3, we see that

$$\int_{\alpha'}^{\beta'} \sum_{r=1}^{r=n} \phi_r(x)\, \phi_r(x')\, dx'$$

differs from $\int_{\alpha'}^{\beta'} \left(\frac{m^2}{x'} - \beta^2\right) K(x, x')\, dx' - 4\beta \frac{d}{d\beta'} K(x, \beta') + 4\alpha' \frac{d}{d\alpha'} K(x, \alpha')$

by less than $\frac{1}{2}\epsilon$, if $n \geqslant n_1$.

The last expression is equal to

$$\int_{\alpha'}^{\beta'} \frac{d}{dx'} \left\{4x' \frac{d}{dx'} K(x, x')\right\} dx' - 4\beta' \frac{d}{d\beta'} K(x, \beta') + 4\alpha' \frac{d}{d\alpha'} K(x, \alpha')$$

or to zero, since $K(x, x')$ satisfies the differential equation

$$\frac{d}{dx'}\left(4x' \frac{dy}{dx'}\right) + \left(\beta^2 - \frac{m^2}{x'}\right) y = 0.$$

It has thus been shewn that

$$\left| \int_{\alpha'}^{\beta'} \sum_{r=1}^{r=n} \phi_r(x)\, \phi_r(x')\, dx' \right| < \tfrac{1}{2}\epsilon$$

for $n \geqslant n_1$, and for all values of α', β' in the interval $(\eta, 1)$, where x is in the interval $(\xi, 1)$ and is not interior to the interval $(\alpha'-\mu, \beta'+\mu)$.

Therefore

$$\left| \int_{\alpha}^{\beta} (xx')^{\frac{1}{2}} \sum_{r=1}^{r=n} \phi_r(x)\, \phi_r(x')\, dx' \right| < \epsilon$$

for all values of α and β in the interval $(0, 1)$, where x is in $(\xi, 1)$ and not interior to the interval $(\alpha-\mu, \beta+\mu)$, provided $n \geqslant n_1$. Since n_1 is dependent only on ϵ, the theorem relating to the values of $\int_{\alpha}^{\beta} F(x, x', n)\, dx$ has been completely established, for the case in which the interval $(0, 1)$ is the interval of definition of an arbitrary function, and in which the set G consists of all the points of the interval $(\xi, 1)$, where ξ is an arbitrarily fixed positive number.

It follows, in virtue of the general convergence theorem, that, *if* $\chi(x)$ *is any function which has a Lebesgue integral in the interval* $(0, 1)$, *then*

$$\int_0^{x-\mu} \chi(x')\, (xx')^{\frac{1}{2}} \sum_{r=1}^{r=n} \phi_r(x)\, \phi_r(x')\, dx$$

converges, as n is indefinitely increased, uniformly to zero, for all values of x $(>\mu)$ belonging to an interval $(\xi, 1)$, where $\xi > 0$. Also

$$\int_{x+\mu}^{1} \chi(x')\,(xx')^{\frac{1}{2}} \sum_{r=1}^{r=n} \phi_r(x)\,\phi_r(x')\,dx'$$

converges, as n is indefinitely increased, uniformly to zero, for all values of x in the interval $(\xi, 1)$ and not exceeding $1-\mu$.

This result holds whatever positive values may be assigned to the numbers μ, ξ.

7. The theorem just established shews that the question of the convergence, as n is indefinitely increased, of the integral

$$\int_{0}^{1} \chi(x')\,(xx')^{\frac{1}{2}} \sum_{r=1}^{r=n} \phi_r(x)\,\phi_r(x')\,dx'$$

for any particular value of x in an interval $(\xi, 1)$, can be answered by examining the nature of the function $\chi(x)$ in an arbitrarily small neighbourhood $(x-\mu, x+\mu)$ of the point x concerned; the function $\chi(x)$ being outside that neighbourhood only restricted by the condition that it shall have a Lebesgue integral in the whole interval (0, 1).

Now let $x^{\frac{1}{2}}\chi(x) = \Phi(x)$, and let us consider the integral

$$\int_{0}^{1} \phi(x') \sum_{r=1}^{r=n} \phi_r(x)\,\phi_r(x')\,dx',$$

where $\Phi(x)$ is a function such that $x^{-\frac{1}{2}}\Phi(x)$ has a Lebesgue integral in the interval (0, 1).

The theorem established in § 6 shews that

$$\int_{0}^{x-\mu} \Phi(x') \sum_{r=1}^{r=n} \phi_r(x)\,\phi_r(x')\,dx', \qquad \int_{x+\mu}^{1} \Phi(x') \sum_{r=1}^{r=n} \phi_r(x)\,\phi_r(x')\,dx$$

converge uniformly to zero, as n is indefinitely increased, for all values of x in the interval $(\xi, 1)$; where also $x \geqslant \mu$ in the first integral, and $x \leqslant 1-\mu$ in the second integral.

It will now be shewn that the conditions stated in §§ 4, 5 (pp. 360–362, *loc. cit.*) of my paper on the general convergence theorem are satisfied by the function

$$F(x', x, n) = \sum_{r=1}^{r=n} \phi_r(x)\,\phi_r(x').$$

It will first be shewn that

$$\int_{x}^{x+\mu} \sum_{r=1}^{r=n} \phi_r(x)\,\phi_r(x')\,dx', \qquad \int_{x-\mu}^{x} \sum_{r=1}^{r=n} \phi_r(x)\,\phi_r(x')\,dx',$$

where μ has a fixed value, converge uniformly to fixed values independent of x for all values of x in an interval interior to the interval $(\xi, 1)$.

We have, as in § 6 above,

$$\int_x^{x\pm\mu} \sum_{r=1}^{r=n} \phi_r(x)\,\phi_r(x')\,dx' = \int_x^{x\pm\mu} \left(\frac{m^2}{x'} - \beta^2\right) \sum_{r=1}^{r=n} \frac{\phi_r(x)\,\phi_r(x')}{\mu_r}\,dx$$

$$-4(x\pm\mu) \sum_{r=1}^{r=n} \frac{\phi_r(x)\,\phi_r'(x\pm\mu)}{\mu_r} + 4x \sum_{r=1}^{r=n} \frac{\phi_r(x)\,\phi_r'(x)}{\mu_r}.$$

As before, the first term on the right-hand side converges uniformly to the value

$$4\beta' \frac{d}{d\beta'} K(x, \beta') - 4\alpha' \frac{d}{d\alpha'} K(x, \alpha'),$$

where $$\alpha' = x+\beta' = x+\mu.$$

The series $$\sum_{r=1}^{r=n} \frac{\phi_r(x)\,\phi_r'(x+\mu)}{\mu_r}$$

converges uniformly to the value $\dfrac{d}{d\beta'} K(x, \beta')$, where $\beta = x+\mu$. There remains for consideration the series

$$\sum_{r=1}^{r=n} \frac{\phi_r(x)\,\phi_r'(x)}{\mu_r}.$$

This consists of a part

$$\frac{(-1)^m}{4\pi x} \sum_{r=1}^{r=n} \frac{\cos 2(\kappa+r\pi)x^{\frac{1}{2}}}{r},$$

which converges uniformly in an interval of x interior to $(\xi, 1)$, and of other parts which converge uniformly for all values of x in $(\xi, 1)$. It follows that $\sum_{r=1}^{r=n} \dfrac{\phi_r(x)\,\phi_r'(x)}{\mu_r}$ converges uniformly to the value $\frac{1}{2}\dfrac{dK(x, x)}{dx}$.

Hence $$\int_x^{x+\mu} \sum_{r=1}^{r=n} \phi_r(x)\,\phi(x')\,dx'$$

converges uniformly to the value

$$4x\left\{\tfrac{1}{2}\frac{dK(x, x)}{dx} - \frac{d}{d\alpha'} K(x, \alpha')\right\},$$

where $\alpha' = x+0$. It will be shewn that this last expression is equal to $\frac{1}{2}$. For

$$\frac{d}{dx} K(x, x) = \phi'(x)\,\psi(x) + \phi(x)\,\psi'(x),$$

with the notation of § 4; also

$$\left\{\frac{d}{d\alpha'} K(x, \alpha')\right\}_{\alpha'=x+0} = \phi(x)\,\psi'(x);$$

and thus

$$4x\left[\tfrac{1}{2}\frac{dK(x,x)}{dx}-\left\{\frac{d}{d\alpha'}\,K(x,\alpha')\right\}_{\alpha'=x+0}\right]=2x\left\{\phi'(x)\,\psi(x)-\phi(x)\,\psi'(x)\right\},$$

and the expression on the right-hand side is, in accordance with § 4, equal to $\frac{1}{2}$.

It has now been shewn that, for a fixed value of μ,

$$\int_x^{x+\mu}\sum_{r=1}^{r=n}\phi_r(x)\,\phi_r(x')\,dx'$$

converges to the value $\frac{1}{2}$, uniformly for all values of x in an interval interior to the interval $(\xi, 1)$.

It may, in a precisely similar manner, be shewn that

$$\int_{x-\mu}^{x}\sum_{r=1}^{r=n}\phi_r(x)\,\phi_r(x')\,dx'$$

converges uniformly to $\frac{1}{2}$ in a similar interval; μ being so chosen that $x-\mu$ is >0 in the interval of uniform convergence.

At the point $x=1$, we have to consider the limit of

$$\int_{1-\mu}^{1}\sum_{r=1}^{r=n}\phi_r(x)\,\phi_r(x')\,dx'.$$

The series $\sum_{r=1}^{r=n}\frac{\phi_r(1)\,\phi_r'(1)}{\mu_r}$ is equivalent to $-\frac{1}{2}H\sum_{r=1}^{r=n}\frac{\{\phi_r(1)\}^2}{\mu_r}$, except in the cases $H=\infty$, $H=0$, when the series vanishes. We have then

$$\begin{aligned}
&\lim_{n=\infty}\int_{1-\mu}^{1}\sum_{r=1}^{r=n}\phi_r(1)\,\phi_r(x')\,dx'\\
&\quad=4\left[\frac{d}{d\beta'}\,K(1,\beta')\right]_{\beta'=1}-4(1-\mu)\left[\frac{d}{d\alpha'}\,K(1,\alpha')\right]_{\alpha'=1-\mu}\\
&\qquad\qquad-4\sum_{r=1}^{r=\infty}\frac{\phi_r(1)\,\phi_r'(1)}{\mu_r}+4(1-\mu)\sum_{r=1}^{r=\infty}\frac{\phi_r(1)\,\phi_r'(1-\mu)}{\mu_r}\\
&\quad=4\psi(1)\,\phi'(1)+2HK(1,1)\\
&\quad=4\left\{\psi(1)\,\phi'(1)-\phi(1)\,\psi'(1)\right\}\\
&\quad=1.
\end{aligned}$$

This result holds also in the case $H=0$. In the case $H=\infty$, it does not hold, but $\phi_r(1)$ is then zero, for all values of r, and the series of normal functions then converges to the value zero.

8. Lastly, it will be shewn that the integrals $\int_{\mu_1}^{\mu} F(x \pm t, x, n)\,dt$ are, for a sufficiently small fixed value of μ, both numerically less than fixed positive numbers, for all values of μ_1 such that $0 \leqslant \mu_1 < \mu$, and for all values of x in an interval $(\xi', 1-\xi'')$; where $F(x', x, n)$ denotes the sum

$$\sum_{r=1}^{r=n} \phi_r(x)\,\phi_r(x').$$

The number μ can be so chosen that $\xi' > \mu$, $\xi'' > \mu$.

In order to estimate the value of the integral $\int_{\mu_1}^{\mu} F(x+t, x, n)\,dt$, we employ the expression (7) of § 3, for $\phi_r(x+t)$, and we can consider separately the various terms of this expression. We have

$$\int_{\mu_1}^{\mu} \frac{1}{(x+t)^{\frac{1}{4}}} \sum_{r=1}^{r=n} \cos\left\{\frac{m\pi}{2} + \frac{\pi}{4} - (\kappa+r\pi)(x+t)^{\frac{1}{2}}\right\} \phi_r(x)\,dt$$

$$= (\mu+x)^{\frac{1}{4}} \int_{\mu_2}^{\mu} \frac{1}{(x+t)^{\frac{1}{2}}} \sum_{r=1}^{r=n} \cos\left\{\frac{m\pi}{2} + \frac{\pi}{4} - (\kappa+r\pi)(x+t)^{\frac{1}{2}}\right\} \phi_r(x)\,dt$$

$$= (\mu+x)^{\frac{1}{4}} \sum_{r=1}^{r=n} \left[2 \sin\left\{\frac{m\pi}{2} + \frac{\pi}{4} - (\kappa+r\pi)(x+t)^{\frac{1}{2}}\right\}\right]_{\mu}^{\mu_2} \frac{\phi_r(x)}{\kappa+r\pi}.$$

Since
$$\frac{1}{\kappa+r\pi} = \frac{1}{r\pi}\left\{1 + \frac{\alpha(r)}{r}\right\},$$

we see, on substitution of $\phi_r(x)$ as given by the form (7) of § 3, that this part of the sum consists partly of uniformly convergent series of which the r-th term contains the factor $1/r^2$, and partly of terms involving series such as

$$\sum_{r=1}^{r=n} \frac{1}{r} \sin\left\{\frac{m\pi}{2} + \frac{\pi}{4} - (\kappa+r\pi)(x+\mu_2)^{\frac{1}{2}}\right\} \cos\left\{\frac{m\pi}{2} + \frac{\pi}{4} - (\kappa+r\pi)\,x^{\frac{1}{2}}\right\},$$

with a similar expression with μ instead of μ_2.

This series is the sum of the two series

$$\sum_{r=1}^{r=n} \frac{1}{2r} \sin\left\{m\pi + \tfrac{1}{2}\pi - (\kappa+r\pi)\left[(x+\mu_2)^{\frac{1}{2}} + x^{\frac{1}{2}}\right]\right\}, \qquad (\alpha)$$

$$\sum_{r=1}^{r=n} -\frac{1}{2r} \sin\left\{(\kappa+r\pi)\left[(x+\mu_2)^{\frac{1}{2}} - x^{\frac{1}{2}}\right]\right\}. \qquad (\beta)$$

It is known that the series $\sum_{r=1}^{r=n} \frac{\cos u r\pi}{r}$, $\sum_{r=1}^{r=n} \frac{\sin u r\pi}{r}$ are uniformly convergent if u is confined to an interval $(\eta, 2-\eta')$, where η and η' are positive

numbers. Since $(x+\mu_2)^{\frac{1}{2}}+x^{\frac{1}{2}}$ is between $2\xi'^{\frac{1}{2}}$ and $(1-\xi'')^{\frac{1}{2}}+(1-\xi''+\mu_2)^{\frac{1}{2}}$, this condition is satisfied for the two series into which the first of the above series may be split up.

Again, it can be shewn* that the expression $\sum_{r=1}^{r=n} \frac{\sin(p+r)u}{r}$ is numerically less than a fixed positive number, independent of n and u, if u is in an interval $(0,\ 2\pi-\eta'')$. Since $(x+\mu_2)^{\frac{1}{2}}-x^{\frac{1}{2}}$ is in the interval $(0,\ \mu)$, it follows that the expression (β) is less than a fixed positive number.

We have next to consider that portion of $\int_{\mu_1}^{\mu} F(x+t, x, n)\,dt$ which is

---

* To prove this, we see that, instead of the expression

$$\sum_{r=1}^{r=n} \frac{\sin(p+r)u}{r},$$

we may consider

$$\sum_{r=1}^{r=n} \frac{\sin(p+r)u}{p+r},$$

since the difference of these expressions is a series which converges uniformly.

If $s_n(u)$ denotes $\sum_{r=1}^{r=n} \frac{\sin(p+r)u}{r}$,

we have

$$\frac{ds_n(u)}{du} = \frac{\sin(p+n+\frac{1}{2})u-\sin(p+\frac{1}{2})u}{2\sin\frac{1}{2}u};$$

and therefore

$$s_n(u) = \tfrac{1}{2}\int_0^u \frac{\sin(p+n+\frac{1}{2})u}{\sin\frac{1}{2}u}\,du-\tfrac{1}{2}\int_0^u \frac{\sin(p+\frac{1}{2})u}{\sin\frac{1}{2}u}\,du$$

$$= \int_0^u \frac{\sin(p+n+\frac{1}{2})u}{u}\,du-\int_0^u \frac{\sin(p+\frac{1}{2})u}{u}\,du+I_n(u)-I_0(u)$$

$$= \int_0^{(p+n+\frac{1}{2})u} \frac{\sin u}{u}\,du-\int_0^{(p+\frac{1}{2})u} \frac{\sin u}{u}\,du+I_n(u)-I_0(u),$$

where

$$I_n(u) = \int_0^u \sin(p+n+\tfrac{1}{2})u\,\frac{u-2\sin\frac{1}{2}u}{2u\sin\frac{1}{2}u}\,du.$$

On integration by parts, we have

$$I(u) = -\frac{u-2\sin\frac{1}{2}u}{2u\sin\frac{1}{2}u}\,\frac{\cos(p+n+\frac{1}{2})u}{p+n+\frac{1}{2}}+\int_0^u \frac{\cos(p+n+\frac{1}{2})u}{p+n+\frac{1}{2}}\,\frac{4\sin^2\frac{1}{2}u-u^2\cos\frac{1}{2}u}{4u^2\sin^2\frac{1}{2}u}\,du.$$

If u be confined to the interval $(0,\ b)$, where $b < 2\pi$, the two expressions

$$\frac{u-2\sin\frac{1}{2}u}{2u\sin\frac{1}{2}u},\quad \frac{4\sin^2\frac{1}{2}u-u^2\cos\frac{1}{2}u}{4u^2\sin^2\frac{1}{2}u}$$

are limited, and therefore

$$I_n(u) < \frac{A}{p+n+\frac{1}{2}},$$

where A is a fixed number. Also $\int_0^\lambda \frac{\sin u}{u}\,du$ is well known to be limited for all positive values of λ. Hence the result has been established.

of the forms

$$\int_{\mu_1}^{\mu} \frac{1}{(x+t)^{\frac{1}{2}}} \sum_{r=1}^{r=n} \left[\frac{a(r, x, t)}{r} \begin{matrix} \cos \\ \sin \end{matrix} \left\{ \frac{m\pi}{2} + \frac{\pi}{4} - (\kappa + r\pi)(x+t)^{\frac{1}{2}} \right\} \phi_r(x) \right] dt,$$

and which is equivalent, on using the mean-value theorem, to

$$(\mu+x)^{\frac{1}{2}} \int_{\mu_2}^{\mu} \frac{1}{(x+t)^{\frac{1}{2}}} \sum_{r=1}^{r=n} \left[\frac{a(r, x, t)}{r} \begin{matrix} \cos \\ \sin \end{matrix} \left\{ \frac{m\pi}{2} + \frac{\pi}{4} - (\kappa + r\pi)(x+t)^{\frac{1}{2}} \right\} \phi_r(x) \right] dt.$$

This expression may be integrated by parts, and we have then an expression containing $r(\kappa + r\pi)$ in the denominator of the general term. Remembering that $a(r, x, t)$ and its differential coefficient are both limited for all values of r, and for all the values of x and t concerned, we see that this part of the integral satisfies the required condition.

The case of $\int_{\mu_1}^{\mu} F(x-t, x, n)\, dx$ may be treated in a precisely similar manner.

It can also be shewn that, except in the case $H = \infty$, for the point $x = 1$, the condition is satisfied, that $\int_{\mu_1}^{\mu} F(1-t, 1, n) dt$ is numerically less than a fixed positive number, for all values of μ_1 such that $0 \leqslant \mu_1 < \mu$.

In this case the portion of the expression corresponding to (α) and (β) is

$$\sum_{r=1}^{r=n} \frac{1}{2r} \sin \left\{ \frac{m\pi}{2} + \frac{\pi}{4} - (\kappa + r\pi)(1-\mu_1)^{\frac{1}{2}} \right\} \cos \left\{ \frac{m\pi}{2} + \frac{\pi}{4} - (\kappa + r\pi) \right\}.$$

Except when $H = \infty$, we have

$$\kappa = \frac{m\pi}{2} + \frac{\pi}{4} + s\pi;$$

therefore this expression may be written

$$\sum_{r=1}^{r=n} \frac{1}{2r} \sin \left\{ (\kappa + r\pi) \left[1 - (1-\mu_1)^{\frac{1}{2}} \right] \right\},$$

and this is numerically less than a fixed positive number, independent of r and μ, for all values of $\mu_1 < \mu$, as has been shewn above.

When $H = \infty$, we have

$$\kappa = \frac{m\pi}{2} + \frac{3\pi}{4} + s\pi,$$

and the series takes the form

$$\sum_{r=1}^{r=n} \frac{1}{2r} \cos \left\{ (\kappa + r\pi) \left[1 - (1-\mu_1)^{\frac{1}{2}} \right] \right\},$$

which is divergent when $\mu_1 = 0$, and therefore the expression is not limited.

The remaining part of $\int_{\mu_1}^{\mu} F(1-t, 1, n)\,dt$ may, as before, be shewn to be numerically less than fixed positive numbers.

9. It is now convenient to replace x and x' by z^2 and z'^2 respectively. The variables z, z' will be taken to be positive, and they are in the interval (0, 1).

If $$|z-z'| \geqslant \mu^{\frac{1}{2}},$$

we have $$|x-x'| \geqslant \mu.$$

It follows, from the result obtained in § 5, that

$$\left| (zz')^{\frac{1}{2}} \sum_{r=1}^{r=n} \phi_r(z^2)\,\phi_r(z'^2) \right|$$

is less, for all values of n, than a fixed positive number N, for all values of z and z' in the interval (0, 1) which are such that $|z-z'| \geqslant \mu^{\frac{1}{2}}$.

From another result in § 6, it follows that

$$\left| \int_{\alpha}^{\beta} (zz')^{\frac{1}{2}} \sum_{r=1}^{r=n} \phi_r(z^2)\,\phi_r(z'^2)\,z'\,dz' \right| < \tfrac{1}{2}\epsilon,$$

for all values of α, β in the interval (0, 1), and for all values of z in an interval $(\xi', 1)$, and not interior to the interval $(\alpha-\mu^{\frac{1}{2}}, \beta+\mu^{\frac{1}{2}})$; for $n \geqslant n_1$, where n_1 depends only on μ, ϵ, and ξ'.

We have now, by employing the second mean-value theorem,

$$\int_{\alpha}^{\beta} (zz')^{\frac{1}{2}} \sum_{r=1}^{r=n} \phi_r(z^2)\,\phi_r(z'^2)\,dz' = \frac{1}{\alpha} \int_{\alpha}^{\beta'} (zz')^{\frac{1}{2}} \sum_{r=1}^{r=n} \phi_r(z^2)\,\phi_r(z'^2)\,z'\,dz',$$

where $\alpha \leqslant \beta' \leqslant \beta$. The expression on the right-hand side is numerically less than $\epsilon/2\alpha$, if the conditions stated above are satisfied. We have now

$$\int_{\eta'}^{\eta} \left| (zz')^{\frac{1}{2}} \sum_{r=1}^{r=n} \phi_r(z^2)\,\phi_r(z'^2) \right| dz' < N\eta,$$

if z is not in the interval $(\eta'-\mu^{\frac{1}{2}}, \eta+\mu^{\frac{1}{2}})$. Let η be now arbitrarily chosen; then, if $\eta \leqslant \alpha$, we have

$$\left| \int_{\alpha}^{\beta} (zz')^{\frac{1}{2}} \sum_{r=1}^{r=n} \phi_r(z^2)\,\phi_r(z'^2)\,dz' \right| < \frac{\epsilon}{2\eta},$$

and, if $\alpha < \eta$, we have

$$\left| \int_\alpha^\beta (zz')^{\frac{1}{2}} \sum_{r=1}^{r=n} \phi_r(z^2)\, \phi_r(z'^2)\, dz' \right| < \frac{\epsilon}{2\eta} + N\eta,$$

for $n \geqslant n_1$. Now, let ϵ' be an arbitrarily small fixed number; we may then choose η to be $\frac{1}{2}N^{-1}\epsilon'$. We may then choose n_1 so great that ϵ is equal to $\frac{1}{2}N^{-1}\epsilon'^2$; it then follows that

$$\int_\alpha^\beta (zz')^{\frac{1}{2}} \sum_{r=1}^{r=n} \phi_r(z^2)\, \phi_r(z'^2)\, dz'$$

is numerically less than the arbitrarily chosen positive number ϵ', provided $n \geqslant n_1$, for all values of α and β in (0, 1), if z is in the interval $(\xi', 1)$, and not interior to $(\alpha-\mu^2, \beta+\mu^2)$.

If, now, we let $F(z', z, n)$ denote the expression

$$(zz')^{\frac{1}{2}} \sum_{r=1}^{r=n} \phi_r(z^2)\, \phi_r(z'^2),$$

we see that the conditions of the general convergence theorem are satisfied, the set G to which z is confined consisting of all the points of the interval $(\xi', 1)$. The number ξ' is arbitrarily small.

It follows that, for all values of z in this interval $(\xi', 1)$,

$$\int_0^{z-\mu^2} \chi(z')(zz')^{\frac{1}{2}} \sum_{r=1}^{r=n} \phi_r(z^2)\, \phi_r(z'^2)\, dz'$$

and

$$\int_{z+\mu^2}^1 \chi(z')(zz')^{\frac{1}{2}} \sum_{r=1}^{r=n} \phi_r(z^2)\, \phi_r(z'^2)\, dz',$$

converge uniformly to zero, where $\chi(z)$ denotes any function which has a Lebesgue integral in the interval (0, 1).

Now, let $\chi(z) = z^{\frac{1}{2}} f(z)$; it then follows that the convergence of

$$\int_0^1 f(z') \sum_{r=1}^{r=n} \phi_r(z^2)\, \phi_r(z'^2)\, z'\, dz'$$

depends only on that of

$$\int_z^{z+\mu'} f(z') \sum_{r=1}^{r=n} \phi_r(z^2)\, \phi_r(z'^2)\, z'\, dz',$$

and of the similar integral with the limits z, $z-\mu'$, the rest of the integral converging uniformly to zero, as n is indefinitely increased, for all values of z in the interval $(\xi', 1)$.

It has been shewn, in § 8, that

$$\int_z^{z+\mu'} \sum_{r=1}^{r=n} \phi_r(z^2)\, \phi_r(z'^2)\, z'\, dz',$$

$$\int_{z-\mu'}^{z} \sum_{r=1}^{r=n} \phi_r(z^2)\, \phi_r(z'^2)\, z'\, dz',$$

converge each to the value $\frac{1}{4}$, uniformly for all values of z in the interval $(\xi', 1)$.

It has also been shewn that

$$\int_{1-\mu'}^{1} \sum_{r=1}^{r=n} \phi_r(1)\, \phi_r(z'^2)\, z'\, dz'$$

converges to the value $\frac{1}{2}$, as n is indefinitely increased.

It has further been shewn that the integrals

$$\int_{\mu_1}^{\mu} \sum_{r=1}^{r=n} \phi_r\{(z \pm t)^2\}\, \phi_r(z^2)(z \pm t)\, dt,$$

are, for a sufficiently small fixed value of μ, both numerically less than fixed positive numbers, for all values of μ_1 such that $0 \leqslant \mu_1 < \mu$, and for all values of z in an interval $(\xi_1, 1-\xi_2)$.

It has also been shewn that, except when $K = \infty$,

$$\int_{\mu_1}^{\mu} \sum_{r=1}^{r=n} \phi_r\{(1-t)^2\}\, \phi_r(1)(1-t)\, dt,$$

is numerically less than a fixed positive number, for all values of μ_1 such that $0 \leqslant \mu_1 < \mu$.

It follows, from the results established in §§ 4, 5 of my earlier paper, that

$$\int_0^1 f(z') \sum_{r=1}^{r=n} \phi_r(z^2)\, \phi_r(z'^2)\, z'\, dz'$$

converges to the value $\frac{1}{4}\{f(z+0)+f(z-0)\}$,

for any interior point z of the interval (0, 1), which is such that a neighbourhood of z exists in which $f(z)$ has limited total fluctuation.

It also follows that the convergence to the value $\frac{1}{2}f(z)$ is uniform in any interval (a, b) in which $f(z)$ is continuous, and which is interior to another interval in which $f(z)$ is of limited total fluctuation.

Also, at the point $z = 1$, the integral converges to the value $\frac{1}{2}f(1-0)$ in case the point has a neighbourhood $(1-\eta, 1)$ in which the function is of limited total fluctuation. The only exception to this is in the case

$K = \infty$, in which the integral vanishes for $z = 1$. Remembering that

$$\phi_r(z^2) = \frac{J_m(k_r z)}{\left\{\int_0^1 \left[\{J_m(k_r z)\}^2 2z\,dz\right]\right\}^{\frac{1}{2}}},$$

where $\lambda_r^{\frac{1}{2}}$ is here denoted by k_r, we have now established the following result.

Let $f(z)$ be any function defined for the interval (0, 1), and let it be such that, whether it be limited or not, in the interval, $z^{\frac{1}{2}}f(z)$ has a Lebesgue integral in the interval (0, 1). Let $k_1, k_2, \ldots, k_n, \ldots$ denote the positive roots of the equation

$$kJ'_m(k) + HJ_m(k) = 0,$$

where m has any real value $\geqslant 0$, and H is a constant which may have the value zero, in which case the equation is

$$J'_m(\lambda) = 0;$$

or H may have the value infinity, in which case the equation is

$$J_m(\lambda) = 0.$$

The series $\sum_{r=1}^{\infty} C_r J_m(k_r z) \int_0^1 f(z')\, J_m(k_r z')\, z'\, dz'$,

in which C_r denotes $\left[\int_0^1 \{J_m(k_r z')\}^2 z'\, dz'\right]^{-1}$,

converges to the value $\frac{1}{2}\{f(z+0)+f(z-0)\}$ at any point z in the interior of the interval (0, 1) which is such that a neighbourhood of z exists in which the function $f(z)$ is of limited total fluctuation (à variation bornée).

Moreover, in any interval (a, b) in which $f(z)$ is continuous, and which is contained in the interior of another interval in which the function is of limited total fluctuation, the convergence of the series to the value $f(z)$ is uniform.

Except in the case $H = \infty$, the series converges at the point $z = 1$ to the value $f(1-0)$, in case a neighbourhood $(1-\epsilon, 1)$ of that point exists in which the function is of limited total fluctuation. In the case $H = \infty$, the series converges to the value zero at the point $z = 1$.

At the point $z = 0$, the series converges to zero, except in the case $m = 0$. In this case $m = 0$, the convergence at the point $z = 0$ has not been investigated.

The value $k_1 = 0$ *occurs among the values of* k_r *only in the case* $H = -m$, *when the values of* k_r *are the positive roots of the equation*

$$J_{m+1}(k) = 0.$$

In this case the first term of the series is

$$2(m+1)\, z^m \int_0^1 f(z')\, z'^{m+1}\, dz'.$$

The value of the constant C_r *is* $\dfrac{2k_r^2}{[H^2+k_r^2-m^2]\{J_m(k_r)\}^2}$, *except when* $H = \infty$, *in which case* $C_r = \dfrac{2}{\{J'_m(k_r)\}^2}$.

When $H = -m$, $C_r = \dfrac{2}{\{J_m(k_r)\}^2}$.

It may be remarked that, in the special case in which $m = \frac{1}{2}$, $H = \infty$,

$$J_{\frac{1}{2}}(z) = \left(\frac{2}{\pi}\right)^{\frac{1}{2}} \frac{\sin z}{z^{\frac{1}{2}}},$$

the series becomes the Fourier's sine-series after multiplication by $z^{\frac{1}{2}}$, and replacing $z^{\frac{1}{2}}f(z)$ by $f(z)$.

ON CUBIC SURFACES.—THE REDUCTION OF A QUATERNARY CUBIC FROM THE SUM OF SIX CUBES TO THE SUM OF FIVE

By A. L. Dixon.

[Received December 15th, 1908.—Read December 10th, 1908.]

The theorem that the general quaternary cubic can be reduced to the sum of five cubes is due to Sylvester, and the corresponding form of the equation of a cubic surface is used by Salmon (*Geometry of Three Dimensions*) in his account of these surfaces. Reye showed how to reduce the quaternary cubic to the sum of six cubes, where one of the six planes is arbitrary, and Cremona proved that the reduction of the equation of a cubic surface to the special form

$$\sum_{r=1}^{r=6} X_r^3 = 0,$$

where

$$\sum_{r=1}^{r=6} X_r = 0,$$

is possible in thirty-six ways, each way corresponding to a double-sixer.

Clebsch proved the possibility of the reduction to Sylvester's form by finding the double points of the Hessian of the cubic in its general form, and Beltrami showed how to reduce the sum of six cubes to the sum of five.*

The present communication investigates the reduction to Sylvester's form by finding the double points of the Hessian, when the cubic is expressed as the sum of six cubes, and also contains a simpler and more symmetrical account of Beltrami's investigations, the chief result being that, if $\Sigma X = 0$ and $\Sigma rX = 0$ are the identical relations between the six planes, the quintic equation which determines the planes of Sylvester's pentahedron is expressed symmetrically in terms of the quantities r. In § 6 a rational equation is found for the five planes taken together, in terms of the planes of a Cremona hexahedron.

---

* *Vide* Salmon-Fiedler, *Analytische Geometrie des Raumes.*

Throughout the paper the planes of a Cremona (or Reye) hexahedron are denoted by capital letters, *e.g.*, $X_1 = 0$, and the two identical relations between the six planes are taken to be $\Sigma X = 0$, $\Sigma rX = 0$, whilst the planes of Sylvester's pentahedron are denoted by small letters, *e.g.*, $x_1 = 0$, and the identical relation is taken to be $\Sigma x = 0$.

1. To find the equation of the Hessian when the equation of the surface is given in Cremona's form

$$\Sigma X_s^3 = 0,$$

with the identical relations

$$\Sigma X_s = 0, \quad \Sigma r_s X_s = 0 \quad (s = 1, 2, 3, 4, 5, 6).$$

The Hessian is the locus of points X', whose polar quadrics with respect to the cubic are cones, and is also the locus of the corresponding points X'', the vertices of these cones.

Thus the polar plane of X'' with regard to the polar quadric of X' will vanish identically, as it is the polar of the vertex of a cone with respect to the cone.

If the coordinates of X' are $(X_1', X_2', \ldots)$ and of X'' $(X_1'', X_2'', \ldots)$, the polar quadric of X' with respect to

$$X_1^3 + X_2^3 + X_3^3 + X_4^3 + X_5^3 + X_6^3 = 0,$$

is

$$\Sigma X^2 X' = 0,$$

and of the polar plane of X'' with respect to this quadric is

$$\Sigma X X' X'' = 0.$$

Since this is to vanish identically, we have, taking account of the identical relations

$$\Sigma X = 0, \quad \Sigma rX = 0,$$

the six relations

$$X_s' X'' = \lambda + \mu r_s \quad (s = 1, 2, 3, 4, 5, 6),$$

where λ and μ are undetermined multipliers. From these, since

$$\Sigma X'' = 0 \quad \text{and} \quad \Sigma rX'' = 0,$$

we get

$$\lambda \Sigma \frac{1}{X'} + \mu \Sigma \frac{r}{X'} = 0, \tag{1}$$

and
$$\lambda\Sigma\frac{r}{X'}+\mu\Sigma\frac{r^2}{X'}=0, \tag{2}$$

so that the equation to the Hessian is given in the form

$$\Sigma\frac{1}{X}\Sigma\frac{r^2}{X}=\left(\Sigma\frac{r}{X}\right)^2.$$

It may also be written in the form

$$\Sigma\frac{(r_1-r_2)^2}{X_1X_2}=0,$$

and so is of fourth degree, as it should be.

2. The double points of the Hessian are determined by the equations

$$\Sigma\frac{1}{X}=0,\quad \Sigma\frac{r}{X}=0,\quad \Sigma\frac{r^2}{X}=0. \tag{3}$$

If now we regard X' as a double point on the Hessian, λ and μ are not determined by equations (1) and (2), and further from (3) we see that both $(1/X_1', 1/X_2', \ldots)$ and $(r_1/X_1', r_2/X_2', \ldots)$ may be considered as coordinates of points, since they satisfy the fundamental identities

$$\Sigma X=0,\quad \Sigma rX=0.$$

Thus the point X'' corresponding to X', a double point on the Hessian, is any point on a fixed straight line, viz., the line joining the points whose coordinates are $(1/X_1', \ldots)$ and $(r_1/X_1', \ldots)$.

Taking a point on this line, whose coordinates are given by

$$X_s=(\lambda-r_s)/X_s',$$

let us see if we can determine λ so that this point also shall be a double point on the Hessian. We have five relations to satisfy, viz.,

$$\Sigma X=0,\quad \Sigma rX=0,\quad \Sigma\frac{1}{X}=0,\quad \Sigma\frac{r}{X}=0,\quad \Sigma\frac{r^2}{X}=0, \tag{4}$$

which become

$$\Sigma\frac{\lambda-r}{X'}=0,\quad \Sigma\frac{\lambda r-r^2}{X'}=0,\quad \Sigma\frac{X'}{\lambda-r}=0,\quad \Sigma\frac{rX'}{\lambda-r}=0,\quad \Sigma\frac{r^2X'}{\lambda-r}=0;$$

but since $X_1', X_2', \ldots$ themselves satisfy the relations (4), these are all satisfied if λ is given by $\Sigma X'/(\lambda-r)=0$. This equation is of the third

degree in λ, since the coefficients of λ^5 and λ^4 vanish on account of the identical relations $\Sigma X = 0$, $\Sigma rX = 0$.

3. Thus corresponding to a double point, say A, on the Hessian, we have a line through three others, say B, C, D, and the point A is given as the intersection of three planes whose equations are of the form

$$\frac{X_1}{\lambda - r_1} + \frac{X_2}{\lambda - r_2} + \frac{X_3}{\lambda - r_3} + \frac{X_4}{\lambda - r_4} + \frac{X_5}{\lambda - r_5} + \frac{X_6}{\lambda - r_6} = 0. \tag{5}$$

It is obvious that the three lines AB, AC, AD lie one in each of the three planes, and so as the results obtained are true for all the double points, any double point is given as the point of intersection of three planes whose equations are of the form (5), and the line corresponding to it as the line of intersection of two planes whose equations are also of the same form.

Thus, if λ_1, λ_2, λ_3 are the values of λ for the three planes which meet in X', we have

$$\Sigma \frac{X'_s}{\lambda - r_s} \equiv \frac{(\Sigma r_s^2 X'_s)(\lambda - \lambda_1)(\lambda - \lambda_2)(\lambda - \lambda_3)}{(\lambda - r_1)(\lambda - r_2)(\lambda - r_3)(\lambda - r_4)(\lambda - r_5)(\lambda - r_6)}. \tag{6}$$

since the coefficient of λ^3 in the numerator of $\Sigma X'/(\lambda - r_s)$, is

$$\Sigma \{X'_s[q - r_s(p - r_s)]\}$$

—where p is the sum of the r's and q is the sum of their products two at a time—which reduces to $\Sigma r_s^2 X'_s$, since $\Sigma X = 0$, $\Sigma rX = 0$. Similarly, we have

$$\Sigma \frac{1}{(\lambda - r_s) X'_s} = \Sigma \left(\frac{r_s^3}{X'_s}\right) \frac{(\lambda - \lambda_4)(\lambda - \lambda_5)}{(\lambda - r_1)(\lambda - r_2)(\lambda - r_3)(\lambda - r_4)(\lambda - r_5)(\lambda - r_6)}, \tag{7}$$

since the point whose coordinates are $1/X'_s$ has been shown to lie on the planes λ_4 and λ_5. The reduction of the coefficient of λ^2 is effected just as above, by the help of the relations (3).

4. For brevity write

$$f(r) \equiv (r - r_1)(r - r_2)(r - r_3)(r - r_4)(r - r_5)(r - r_6),$$

and

$$\phi(\lambda) = (\lambda - \lambda_1)(\lambda - \lambda_2)(\lambda - \lambda_3)(\lambda - \lambda_4)(\lambda - \lambda_5).$$

Then, putting $\lambda = r_s$ in (6), I get

$$X_s' = -(\Sigma r_s^2 X_s')(\lambda_1 - r_s)(\lambda_2 - r_s)(\lambda_3 - r_s)/f'(r_s),$$

and making the same substitution in (7),

$$\frac{1}{X_s'} = \left(\Sigma \frac{r_s^3}{X_s'}\right)(\lambda_4 - r_s)(\lambda_5 - r_s)/f'(r_s).$$

Multiplying these two equations together

$$\phi(r_s)(\Sigma r_s^2 X_s')[\Sigma(r_s^3/X_s')] = [f'(r_s)]^2,$$

so that $\phi(r_s)/[f'(r_s)]^2$ has the same value for all values of s.

But expanding $\phi(\lambda)/f(\lambda)$ by partial fractions we have

$$\frac{\phi(\lambda)}{f(\lambda)} = \Sigma \frac{\phi(r_t)}{f'(r_t)} \frac{1}{\lambda - r_t};$$

and therefore, since $\phi(r_t)$ is proportional to $[f'(r_t)]^2$, $\phi(\lambda) = 0$ is equivalent

$$\Sigma f'(r_t)/(\lambda - r_t) = 0,$$

and further we must have

$$\Sigma f'(r_t)/(\lambda - r_t) = [\Sigma f'(r_t)]\,\phi(\lambda)/f(\lambda),$$

so that

$$\phi(r_t)/[f'(r_t)]^2 = 1/\Sigma f'(r_t).$$

The double points of the Hessian are the summits of Sylvester's pentahedron, and the ten straight lines in the Hessian, which correspond to them, are its edges, so that we have found the equation to its five planes, in terms of the planes of Cremona's hexahedron, viz., the planes are

$$\sum_{s=1}^{s=6} X_s/(\lambda - r_s) = 0,$$

where λ is a root of the quintic

$$\sum_{s=1}^{s=6} f'(r_s)/(\lambda - r_s) = 0.$$

5. It is now possible to start afresh and prove directly the algebraical theorem which is at the basis of these results.*

If a set of six homogeneous coordinates X_s are connected by the identities $\Sigma X_s = 0$, $\Sigma r_s X_s = 0$, let us introduce new independent variables y_1, y_2, y_3, defined by putting

$$f(r) = \Pi(r - r_s),$$

and
$$f'(r_s) X_s = M(y_1 - r_s)(y_2 - r_s)(y_3 - r_s).$$

Then, since
$$\Sigma r_s^p / f'(r_s) = 0$$

when $p < 5$, and
$$\Sigma r_s^5 / f'(r_s) = 1,$$

we have
$$\Sigma X_s = 0, \quad \Sigma r_s X_s = 0, \quad \Sigma r_s^2 X_s = -M.$$

Take another set of five homogeneous coordinates x_s, defined by putting

$$\phi(\lambda) = \Pi(\lambda - \lambda_s),$$

and
$$\phi'(\lambda_s) x_s = M(y_1 - \lambda_s)(y_2 - \lambda_s)(y_3 - \lambda_s),$$

so that
$$\Sigma x_s = 0, \quad \Sigma \lambda_s x_s = -M.$$

These relations imply the identity

$$\frac{\phi(\alpha)}{\Sigma \lambda_s x_s} \Sigma \frac{x_s}{\alpha - \lambda_s} = \frac{f(\alpha)}{\Sigma r_t^2 X_t} \Sigma \frac{X_t}{\alpha - r_t} = (\alpha - y_1)(\alpha - y_2)(\alpha - y_3),$$

for all values of α, from which are derived at once the two formulæ of substitution

$$\frac{x_s}{\Sigma \lambda_s x_s} = \frac{f(\lambda_s)}{\phi'(\lambda_s)} \Sigma \frac{X_t}{\lambda_s - r_t}, \qquad \frac{X_t}{\Sigma r_t^2 X_t} = \frac{\phi(r_t)}{f'(r_t)} \Sigma \frac{x_s}{r_t - \lambda_s}.$$

Then I say that we have the identical relation

$$\sum_s \frac{[\phi'(\lambda_s)]^2}{f(\lambda_s)} x_s^3 + \sum_t \frac{[f'(r_t)]^2}{\phi(r_t)} X_t^3 \equiv 0.$$

---

* [*Note added January 20th*, 1909.—There is a theorem, due originally to Paul Serret, that if $P = 0$ is the equation of a plane, and there exists between eleven planes the identical relation $\Sigma P^3 = 0$, all these planes touch a developable of the third class. I am informed by Mr. H. W. Richmond that, in a course of lectures delivered at Cambridge, he has given the method and results of paragraph 5 of this paper, taking Serret's theorem as a starting point.]

For substituting the expressions in y, just given, this relation becomes

$$\sum_s \frac{[(y_1-\lambda_s)(y_2-\lambda_s)(y_3-\lambda_s)]^3}{f(\lambda_s)\,\phi'(\lambda_s)} + \sum_t \frac{[(y_1-r_t)(y_2-r_t)(y_3-r_t)]^3}{f'(r_t)\,\phi(r_t)} = 0,$$

and writing for the moment

$$f(x)\,\phi(x) = F(x) = \Pi(x-a),$$

a product of eleven factors, we have, since $[(y_1-a)(y_2-a)(y_3-a)]^3$ is only of the ninth degree in a,

$$\Sigma[(y_1-a)(y_2-a)(y_3-a)]^3/F'(a) = 0,$$

and then since $$F'(a) = f'(a)\,\phi(a)+\phi'(a)\,f(a),$$

we have $$F'(\lambda_s) = \phi'(\lambda_s)\,f(\lambda_s), \qquad F'(r_t) = f'(r_t)\,\phi(r_t),$$

and so, splitting up the sum into two parts,

$$\sum_s \frac{[(y_1-\lambda_s)(y_2-\lambda_s)(y_3-\lambda_s)]^3}{f(\lambda_s)\,\phi'(\lambda_s)} + \sum_t \frac{[(y_1-r_t)(y_2-r_t)(y_3-r_t)]^3}{f'(r_t)\,\phi(r_t)} = 0,$$

or, finally, $$\Sigma a_s x_s^3+\Sigma A_t X_t^3 \equiv 0,$$

where $$a_s = [\phi'(\lambda_s)]^2/f(\lambda_s), \qquad A_t = [f'(r_t)]^2/\phi(r_t).$$

Thus, if a_s and λ_s are given, r_t is a root of the sextic

$$\sum_s \frac{\phi'(\lambda_s)}{a_s(r-\lambda_s)}+r+c = 0,$$

where c is an arbitrary constant, and conversely, if A_t and r_t are given, λ_s is a root of the quintic

$$\sum_t \frac{f'(r_t)}{A_t(\lambda-r_t)} = 0.$$

6. The equation of the five planes of Sylvester's pentahedron will be given by eliminating λ from the equations

$$\Sigma X_s/(\lambda-r_s) = 0, \qquad \Sigma f'(r_s)/(\lambda-r_s) = 0.$$

Using the method of elimination given in a paper recently published,* one

* "On a Form of the Eliminant of Two Quantics," *Proc. London Math. Soc.*, Vol. 6, p. 468.

form of the required equation is

$$\begin{vmatrix} \Sigma(1,s), & -(2,1), & -(3,1), & -(4,1), & -(5,1) \\ -(1,2), & \Sigma(2,s), & -(3,2), & -(4,2), & -(5,2) \\ -(1,3), & -(2,3), & \Sigma(3,s), & -(4,3), & -(5,3) \\ -(1,4), & -(2,4), & -(3,4), & \Sigma(4,s), & -(5,4) \\ -(1,5), & -(2,5), & -(3,5), & -(4,5), & \Sigma(5,s) \end{vmatrix} = 0,$$

where $$(s,t) = (t,s) = [f'(r_s)X_t - f'(r_t)X_s]/(r_s - r_t),$$

and $$\Sigma(1,s) = (1,2)+(1,3)+(1,4)+(1,5)+(1,6),$$

with similar expressions for the other terms of the principal diagonal.

ON IMPLICIT FUNCTIONS AND THEIR DIFFERENTIALS

By W. H. YOUNG, Sc.D., F.R.S.

[Received January 20th, 1909.—Read February 11th, 1909.]

Introductory.

1. In the earlier treatises on the differential calculus, the transition from the consideration of explicit to that of implicit functions of a real variable was made almost without comment. The existence and differentiability of the latter class of functions was tacitly assumed as well as all necessary properties of the function of two variables which, when equated to zero, gives us the defining equation. Needless to add that the proof of the rules for obtaining the successive differential coefficients lacked clearness and rigour. In the more modern treatises, on the other hand, the transition is marked—is, indeed, abrupt in character. The reader is suddenly transported to a discussion of the properties of power series of one or more variables, so that instead of the attention being confined, as in the case of the differential coefficients of explicit functions, to a certain neighbourhood of the point in question, to what goes on, in fact, *im Kleinen,* he is obliged to consider the whole portion of space inside a certain circle or region of convergence, and to contemplate what goes on *im Grossen.* It is difficult to see how this mode of treatment can be justified from the point of view of the theory of functions of a real variable, or, indeed, to take another example, from that of differential geometry.

In the theory of functions of a real variable explicit functions not expressible by power series are an everyday occurrence, and there seems no reason for restricting the nature of implicit functions. In differential geometry, on the other hand, we are rarely concerned with a more than limited number of differential coefficients, supposed to exist at the point under consideration, and the question whether the higher differential coefficients exist or not does not arise and has little interest.

The new definitions of differentials and the fundamental theorems concerning them given in my paper "On Differentials," presented lately to the Society, systematise the discussion of implicit functions *im Kleinen.*

The results obtained in the present paper for implicit functions of any number of variables correspond *precisely* to the results for a single

independent variable and include them as a special case, differentials taking the place of differential coefficients. The scope of the results corresponds exactly to the amount of assumption made in each case, and the ordinary rules of the differential calculus are shewn rigidly to apply for implicit functions defined in the wide sense of the present paper.

As far as I know, the only theorem on the subject of implicit functions not necessarily analytic previously known is the following one due to Dini,* and its generalisation for several variables and more than one equation :—

If the equation $f(x, y) = 0$ *is satisfied by the values* $x = a$, $y = b$, *and if the function* $f(x\ y)$ *and its first differential coefficients at* (a, b) *are continuous with respect to* (x, y), *and if* f_y *is not zero at the point* (a, b), *then one, and only one, function* y *of* x *exists satisfying the equation* $f(x, y) = 0$ *and having the value* b *when* x *is* a. *Moreover, this function possesses at* $x = a$ *a differential coefficient.*

These theorems, which it will be noticed do not involve the idea of differential at all, form a very special case of those given in the present paper.

The theory takes its simplest form when the defining functions possess at least a second differential, the corresponding general theorem obtained being as follows :—

If $f_1(x, y)$, $f_2(x, y)$, ..., $f_r(x, y)$ *are* r *functions of the* m *variables* x *and the* r *variables* y, *which are zero when the* x*'s are equal to* a*'s and the* y*'s to* b*'s, i.e., at the point* (a, b), *and have* n*-th differentials there, where* $n \geqslant 2$, *and if the Jacobian* J *of the* f*'s with respect to the* y*'s is not zero at the point* (a, b), *then there exist unique functions* $y_1, y_2, \ldots, y_r$ *of the* x*'s, which have the values* $b_1, \ldots, b_r$ *at the point* a, *and, throughout a closed neighbourhood of that point, make all the* f*'s identically zero. Moreover, these functions* y *have at the point* a n*-th differentials whose values may be obtained from the usual equations.* (Theorem 9, § 14.)

When the defining function or functions have only first differentials, the theorem takes a much less simple form. Taking, for simplicity, the case of two variables x and y and a single defining function $f(x, y)$, the theorem is as follows :—

If $f(x, y)$ *be a function of* x *and* y, *whose value at the point* (a, b) *is zero, and which in a certain closed neighbourhood of the point* (a, b) *is continuous with respect to* x *and with respect to* y, *and possesses at*

* U. Dini, *Analisi*, I., p. 163.

the same point a finite differential coefficient with respect to y, f_b, different from zero, then a function y of x exists with the following properties :—

(1) *Its value is b when x is a.*

(2) *When substituted in $f(x, y)$ it makes $f(x, y)$ zero throughout a certain neighbourhood of the point (a, b).*

(3) *Further, if, for each fixed value of x, f is a monotone never constant function of y, this function y of x is unique.*

(4) *Further, if f is a continuous function of the ensemble (x, y), this function y is a continuous function of x.*

(5) *Finally, if f possesses at the point (a, b) a first differential, then this function y possesses at the point $x = a$ a first differential coefficient.*

This enunciation seems, perhaps, unduly complicated, but examples are given shewing that no simpler statement will serve.

The paper falls into three parts : in the first part certain preliminary theorems about differentials, required in the sequel, are proved ; in Part II., implicit functions defined by a single equation, and, in Part III., those defined by two or more equations are discussed.

PART I.

§§ 2–5. *Preliminary Theorems.*

2. THEOREM 1.—*If u be a function of the r variables $x_1, x_2, \ldots, x_r$ and the s variables $y_1, y_2, \ldots, y_s$, while v is a function of the s variables $y_1, y_2, \ldots, y_s$ and the t variables $z_1, z_2, \ldots, z_t$, and, if u possess an n-th differential with respect to the ensemble of the x's and the y's at the point $(a_1, a_2, \ldots, a_r ; b_1, b_2, \ldots, b_s)$, and v possess an n-th differential with respect to the ensemble of the y's and the z's at the point $(b_1, b_2, \ldots, b_s ; c_1, c_2, \ldots, c_t)$, then $u+v$ and $u-v$ both possess n-th differentials with respect to the ensemble of the x's, y's, and z's at the point*

$$(a_1, a_2, \ldots, a_r ; b_1, b_2, \ldots, b_s ; c_1, c_2, \ldots, c_t).$$

The theorem is obvious when $n = 1$, and follows by induction for $n > 1$, from the very mode in which we have defined the n-th differential at a point as the first differential of the $(n-1)$-th differential, supposed to exist at the point and in the neighbourhood.

[N.B.—The y's and b's may, of course, in a particular case, be absent ; or, again, the x's and z's with the a's and c's may be absent.]

3. THEOREM 2.—*Under the same hypotheses, the product uv possesses an n-th differential at the point in question.*

To prove the theorem when $n = 1$ we write, for shortness, x for the ensemble of the x's, y for that of the y's, and z for that of the z's, and D for the operator

$$\Sigma\left(h_i \frac{d}{dx_i} + k_{i'} \frac{d}{dy_{i'}} + l_{i''} \frac{d}{dz_{i''}}\right).$$

Writing $\quad u = f(x, y), \quad v = g(y, z), \quad uv = F(x, y, z),$

we then have, using the rule for differentiating a product,

$$DF = fDg + gDf. \tag{1}$$

Now

$$F(x+h, y+k, z+l) = f(x+h, y+k)\, g(y+k, z+l)$$
$$= \{f(x, y) + Df(x, y) + E_1\}\, \{g(y, z) + Dg(y, z) + E_2\}, \tag{2}$$

when f and g both have first differentials at the point (x, y, z) in question. Here E_1 is a linear function of the h's and k's and E_2 a linear function of the k's and l's, whose coefficients have zero as limit when the h's, k's, and l's approach zero in any manner.

Hence, multiplying out the right-hand side of (2) and using (1),

$$F(x+h, y+k, z+l) = F(x, y, z) + DF + E_3, \tag{3}$$

where E_3 is a linear function of the h's, k's, and l's whose coefficients have zero as limit when the h's, k's, and l's approach zero in any manner.

The equation (3) shows that, by the definition of a first differential, F has a first differential at the point in question, and it is given by

$$\Delta F = f\Delta g + g\Delta f, \tag{3'}$$

since the operator D, which gives the differential Δ, if it exists, obeys the relation (1).

This proves the theorem when $n = 1$. Moreover, it shews that the differential of the product is a linear function of u, v and their differentials, and therefore, by Theorem 1 and the present theorem for $n = 1$, has itself a first differential with respect to the ensemble (x, y, z) at the point in question, if u, v and their first differentials have first differentials at the corresponding points. In other words, recalling the definition of a second differential as the differential, if it exists, of the first differential, supposed to exist at the point and in the neighbourhood, the product uv has a second differential with respect to the ensemble (x, y, z) at the point (a, b, c), provided u and v have second differentials at the points (a, b) and (b, c) respectively.

This proves the theorem when $n = 2$. Moreover, it shows that the

second differential of the product is a linear function of u, v and their first and second differentials, viz.,

$$\Delta^2 F = \Delta(f\Delta g)+\Delta(g\Delta f) = f\Delta^2 g+2\Delta f\Delta g+g\Delta^2 f.$$

Hence, by similar reasoning, the theorem follows for $n = 3$, and so generally, by induction, the form of the n-th differential of the product being identical with Leibniz's formula for the n-th differential coefficient of a product.

4. THEOREM 3.—*Under the same hypotheses, if w is defined by the identity*

$$u+vw = 0, \tag{1}$$

w has an n-th differential at the point (a, b, c) provided v does not vanish at the point (b, c).

To prove the theorem for $n = 1$, we have, using $F(x, y, z)$ for w,

$$f(x+h, y+k)+g(y+k, z+l)\,F(x+h, y+k, z+l) = 0\,; \tag{2}$$

or, since f and g have first differentials at the point (x, y, z) in question,

$$f(x, y)+Df(x, y)+E_1+\{g(y, z)+Dg(y, z)+E_2\}\,F(x+h, y+k, z+l) = 0. \tag{3}$$

Multiplying this equation by $g(y, z)$ and subtracting (1), after multiplying it by the coefficient of $F(x+h, y+k, z+l)$ in (3), we get

$$-f(x, y)\{Dg(y, z)+E_2\}+g(y, z)\{Df(x, y)+E_1\}$$
$$+g(y, z)\{g(y, z)+Dg(y, z)+E_2\}\{F(x+h, y+k, z+l)-F(x, y, z)\} = 0,$$

that is,

$$g(y, z)\,Df(x, y)-f(x, y)\,Dg(y, z)+E_3$$
$$+\{g(y, z)\}^2\{F(x+h, y+k, z+l)-F(x, y, z)\} = 0, \tag{4}$$

where

$$E_3 = E_1 g(y, z)-E_2 f(x, y)$$
$$+g(y, z)\{Dg(y, z)+E_2\}\{F(x+h, y+k, z+l)-F(x, y, z)\},$$

so that E_3 is a linear function of h, k, and l whose coefficients have zero as limit when h, k, and l approach zero in any manner whatever.

Now, if g does not vanish at the point in question, we may divide (4) by g^2, whence, using the expressions for the differential coefficient of a product or proving those expressions independently from the equation

(4), we get

$$F(x+h, y+k, z+l) = F(x, y, z)+DF(x, y, z)+E_3/g^2, \tag{5}$$

where

$$DF(x, y, z) = \frac{gDf-fDg}{g^2}. \tag{6}$$

This shews that F has a first differential at the point whose form is, of course, precisely that of the differential coefficient of a quotient. This proves the theorem for $n = 1$.

If u and v have second differentials at the point, and therefore first differentials in the neighbourhood, we can, since g is continuous, so restrict the neighbourhood that g is never zero in it. The equations (5) and (6) will then hold throughout the neighbourhood, so that w, that is F, will have a first differential at every point of the neighbourhood given by the equation

$$\{g(y, z)\,\Delta f(x, y)-f(x, y)\,\Delta g(y, z)\}-\{g(y, z)\}^2\,\Delta F(x, y, z) = 0,$$

which is an equation of the original form (1), in which the place of u is taken by the difference of products of functions which are known to have first differentials, that is, by a function which has a first differential at the point in question, and the place of u is taken by $-u^2$, that is $-g^2$, which again, by Theorem (2), has a first differential at the point and is not zero there. Hence, applying the theorem already proved for $n=1$, it follows that F has a second differential, and that this is again given by an equation of the form (1).

Using induction, it easily follows that the theorem is true for all values of n, and that the successive differentials may be obtained by the rule for finding the successive differential coefficients of a quotient.

5. THEOREM 4.—*If* $f(x_1, x_2, \ldots, x_p;\ z_1, z_2, \ldots, z_m)$ *be a function of the* $(p+m)$ *variables* x *and* z *and have a first differential at the point* $(a_1, a_2, \ldots, a_p;\ c_1, c_2, \ldots, c_m)$, *and if the* z*'s are functions of certain of the* x*'s and of* s *other variables* $y_1, y_2, \ldots, y_s$ *and have the values* $c_1, c_2, \ldots, c_m$ *when the* x*'s have the values* $a_1, a_2, \ldots$ *and the* y*'s the values* $b_1, b_2, \ldots, b_s$, *and, if at the point* $(a_1, a_2, \ldots;\ b_1, b_2, \ldots)$ *each of the* z*'s has an* n*-th differential with respect to the variables on which it depends, then* f, *regarded as a function of all the* p *variables* x *and the* m *variables* y, *has an* n*-th differential at the point* $(a_1, a_1, \ldots, a_p;\ b_1, b_2, \ldots, b_m)$.

It is first to be remarked that we may suppose each variable z to be a function of all the $p+m$ variables x and y. For a function of some of these variables is only a special case of a function of all of them, and its differential coefficient with respect to any missing variable is zero, so

that its differential may be regarded as its differential with respect to all the variables.

Having premised this, it is unnecessary explicitly to mention the x's directly involved in f, since any such x is then a special case of a function of the $(p+m)$ variables, and may itself be denoted by the letter z. Having done this, there is no longer any reason for distinguishing between the y's and the x's, and we may replace $f(x_1, x_2, \ldots, x_p; z_1, z_2, \ldots, z_m)$ by $f(z_1, z_2, \ldots, z_m)$, where the z's are functions of $x_1, x_2, \ldots, x_p$.

To prove the theorem for $n=1$, let us write

$$f(z_1, \ldots, z_m) = F(x_1, \ldots, x_p)$$

or, shortly, using x and z for the ensembles of the x's and the z's respectively

$$f(z) = F(x).$$

Since the z's have first differentials at the point considered,

$$z_i = c_i + Dz_i + E_i,$$

where E_i is a linear function of $h_1, h_2, \ldots, h_n$ whose coefficients have zero as limit when the h's approach zero in any manner, and D denotes the operator

$$h_1 \frac{d}{dx_1} + h_2 \frac{d}{dx_2} + \ldots + h_p \frac{d}{dx_p}.$$

Hence $$F(x) = f\{c_1 + D_1 z_1 + E_1, \ldots, c_m + Dz_m + E_m\}$$

or, since F has a first differential,

$$F(x) = f(c) + \sum_z (Dz + E) \frac{df}{dz} + E', \tag{1}$$

where E' is a linear function of the increments $Dz+E$, and therefore of the p variables h, whose coefficients have zero as limit.

Hence, keeping all the variables except one constant and proceeding to the limit after dividing by the increment of that variable, we get

$$\frac{d}{dx_i} \{F(x)\} = \sum_z \frac{df}{dz} \frac{dz}{dx_i},$$

and therefore

$$DF(x) = \sum_z \left(Dz \frac{df}{dz} \right). \tag{2}$$

Hence, by (1), $$F(x) = F(a) + DF(x) + E'',$$

where E'' is again a linear function of the h's whose coefficients have zero as limit. That is, $F(x)$ has a first differential at the point considered.

This proves the equation for $n = 1$.

If $n = 2$, the above reasoning shews that the first differential of F, which, since it exists, has the form DF and is therefore given by the

equation (2), has a first differential, and therefore F has a second differential with respect to the x's. For DF is, by (2), expressed as a sum of terms of the form $Dz(df/dz)$ consisting of two factors: the first a function of the x's having a first differential with respect to the x's at the point considered, the second a function of the z's having a first differential with respect to the z's at the corresponding point. Each such term has, therefore, by Theorem 2, a first differential with respect to the x's and z's, and therefore, by what has been proved, a first differential at the point considered with respect to the x's alone. Hence the sum of all the terms has the same property.

This proves the theorem for $n = 2$.

The theorem now follows, similarly, by induction, assuming that it holds for $n = r$, and that the r-th differential with respect to x is a function of the x's and z's which has a first differential with respect to all the x's and z's which it involves.

PART II.

§§ 6–11. *Existence and Differentials of an Implicit Function defined by a Single Equation.*

6. THEOREM 5.—*If $f(x, y)$ be a function of x and y, whose value at the point (a, b) is zero, and which in a certain closed neighbourhood of the point (a, b) is continuous with respect to x and with respect to y, and possesses at the same point a finite differential coefficient with respect to y, f_b different from zero, then a function y of x exists with the following properties :—*

(1) *Its value is b when x is a.*

(2) *When substituted in $f(x, y)$ it makes $f(x, y)$ zero throughout a certain neighbourhood of the point (a, b).*

(3) *Further, if, for each fixed value of x, f is throughout some closed neighbourhood of the point (a, b) a monotone never constant function of y, this function y of x is unique.*

(4) *Further, if f is a continuous function of the ensemble (x, y) in the closed neighbourhood of the point (a, b), this function y of x is a continuous function of x.*

(5) *Finally, if f possesses at the point (a, b) a first differential, then this function y of x possesses at the point $x = a$ a first differential*

coefficient, whose value p is given by

$$f_a + pf_b = 0.$$

For definiteness it will be assumed that f_b is positive. It then follows from the definition of a differential coefficient, and the fact that $f(a, b)$ is zero, that we can find a stretch on the ordinate of the point (a, b), having that point as centre, such that in the upper half f is greater than zero, and in the lower half it is less than zero. Hence also, since f is continuous with respect to x, we can draw two stretches* parallel to the axis of x, having the end-points of the stretch just found for centres, and of equal length, such that in the upper one f is greater than zero, and in the lower one f is less than zero.

Completing this rectangle† we obtain a closed neighbourhood of the point (a, b), such that in it on each ordinate f has a positive value and a negative value, and therefore, since f is continuous with respect to y, assumes the value zero at one or more points forming a closed set.

The y-coordinate of the lowest of these points on each ordinate constitutes a function y of x having the properties (1) and (2).

If f is for each fixed value of x, a monotone never constant function of y, this function y of x is unique, for f then only assumes each of its values once on each ordinate, in particular f is zero once only. This proves (3).

To prove (4), we only have to notice that, if f is continuous with respect to the ensemble (x, y), the plane‡ set of all its zeros in the closed neighbourhood chosen forms a closed set. Hence, taking any sequence $x_1, x_2, \ldots$ having x as limit, the corresponding zeros have as limit the zero on the limiting ordinate, so that the function y of x has for every value of x a value equal to the unique limit of values in the neighbourhood, *i.e.*, it is a continuous function of x.

Finally, if f has a first differential at the point (a, b), there is a closed neighbourhood of the point such that throughout it

$$f(a+h, b+k) = h(f_a+e_1)+k(f_b+e_2),$$

where the e's have zero as limit when h and k approach zero in any manner. Hence, inserting for $b+k$ our function y,

$$0 = (x-a)(f_a+e_1)+(y-b)(f_b+e_2),$$

* In the corresponding $(n+1)$-dimensional discussion these are what may be called hyperstretches: thus for three dimensions they are squares, for four dimensions cubes, and so on.

† $(n+1)$-dimensional parallelepiped.

‡ $(n+1)$-dimensional.

so that
$$\frac{y-b}{x-a} = -\frac{f_a+e_1}{f_b+e_2},$$

where, when x approaches a in any manner, y being continuous has the limit b, and therefore e_1 and e_2 both have the limit zero.

Proceeding to the limit, we have, by the definition of a differential coefficient,
$$\frac{dy}{dx} = -f_a/f_b,$$

that is,
$$f_a+pf_b = 0.$$

Note.—If the condition which secures the uniqueness be omitted it is evident that the uppermost of all the functions y of x which make $f=0$ is upper-semi-continuous, and that the lowest is lower-semi-continuous.

COR. 1.—*We may replace the condition that throughout the neighbourhood f should be for each fixed value of x a monotone nowhere constant function of y, by the condition that f_y should exist throughout a closed neighbourhood of (a, b) and be nowhere zero.*

In fact, if f_y is nowhere zero in the neighbourhood it has always the same sign on each ordinate, since for each fixed value of x it assumes on the corresponding ordinate every value between its upper and lower bounds, and therefore could not have opposite signs without being somewhere zero.

It is for the rest clear by applying the Theorem of the Mean that, if f vanishes at two points on an ordinate f_y must vanish at some point between the two points, so that the condition in question necessarily excludes this possibility.

COR. 2.—*We may replace the condition in question by the following :*—that f_y should exist throughout a closed neighbourhood of the point (a, b), and be continuous at that point with respect to the ensemble (x, y).*

For in this case we can assign a closed neighbourhood of the point (a, b) throughout which f_y has the same sign as at (a, b), and therefore never vanishes, so that we can apply Cor. 1.

7. The following examples shew that the theorem just proved contains the utmost that can be stated under the circumstances there enunciated.

* A particular case of this is Dini's theorem which replaces this condition by requiring the continuity of both f_x and f_y at the point (a, b). Cp. Dini's lithographed lectures.

Ex. 1.—Let $$f(x, y) = y-x-x^2-\frac{2x^4}{y-x}, \tag{1}$$

except in that portion of the plane bounded by the curves

$$y = x+2x^2, \quad \text{and} \quad y = x-x^2,$$

in which the line $y = x$ lies, in which portion

$$f(x, y) = 0. \tag{2}$$

Here, when $x = 0$, $f = y$, therefore at the origin df/dy exists, and is unity. When $y = 0$, $f = -x-x^2+2x^3$, and therefore df/dx exists at the origin and is -1.

Evidently f is a continuous function of (x, y) throughout the plane, vanishing as it does on the boundary of the two portions of space in which it has values given by (1) and (2) respectively.

Evidently along any one of the curves

$$y = x+\frac{2-c}{1+c}x^2,$$

where c has any positive value, rational or irrational, f vanishes. Thus there is a more than countably infinite number of continuous functions of x which make f zero.

In spite, however, of this fact, f possesses a first differential at the origin. For suppose e any assigned small positive quantity. Then we can shew that throughout the square whose centre is the origin, and sides parallel to the coordinate axes, and of length $\frac{1}{2}e$, we have the following equation

$$f(x, y) = x\left(\frac{df}{dx}\right)_{0,0}+y\left(\frac{df}{dy}\right)_{0,0}+e_1x,$$

where e_1 is numerically less than e.

In fact, if (x, y) be any point in the portion of the plane in which (1) holds, we have

$$y-x \geqslant 2x^2 \quad \text{or} \quad \leqslant -x^2;$$

and therefore numerically $\geqslant x^2$. Hence $2x^4/(y-x)$ is numerically $< 3x^2$. Hence

$$f(x, y) = y-x+kx^2, \tag{3}$$

where k is numerically less than 4, and kx accordingly numerically less than e, since the point in question is supposed chosen in the square previously referred to.

Again, if (x, y) lie in the portion of space in which (2) holds,

$$y-x \leqslant 2x^2 \quad \text{and} \quad \geqslant -x^2;$$

and is therefore numerically less than $3x^2$. Hence

$$f(x, y) = 0 = y-x-(y-x) = y-x+k'x^2, \tag{4}$$

where k' is numerically less than 3, and $k'x$ accordingly numerically less than e. From (3) and (4), bearing in mind the values of df/dx and df/dy at the origin the required result follows.

Ex. 2.—Let f have the same value as before, except in the portion of the plane between the curves

$$y = x+2x^2, \qquad y = x-x^2.$$

In this portion of the plane let

$$f(x, y) = (x+2x^2-y)(x-x^2-y).$$

As before, at the origin $df/dy = 1$, and $df/dx = -1$, and we prove by an argument similar to that used in the preceding case that f possesses a differential.

Here, on the other hand, there are two, and only two, functions of y which, when substituted for y in f, make f vanish, these functions being both of them continuous.

8. THEOREM 6.—*If $f(x, y)$ is a function of the ensemble (x, y) which is zero at (a, b), and possesses there an n-th differential, where n is greater than unity, then, provided df/dy is not zero at the point (a, b), we can find a closed neighbourhood of the point (a, b), in which there is one, and only one, function $g(x)$ of x which has the value b when $x = a$ and when substituted for y makes $f(x, y)$ identically zero. Further, this function possesses an n-th differential coefficient at the point (a, b), which may be obtained by equating to zero the total successive differential coefficients of the function $f(x, y)$, obtained by the ordinary rule.*

First, to prove the theorem when $n = 2$, we remark that, since the function has a second differential at the point (a, b), a first differential exists at and in a closed neighbourhood of the point (a, b). Also since f has a second differential at the point (a, b), f_y has a first differential there, and is therefore continuous at (a, b). Hence, remembering that f_b is different from zero, we may so choose our neighbourhood that f_y is different from zero at every point considered. The neighbourhood so chosen is then such that the conditions of Theorem 5 are satisfied at every point. Hence corresponding to each point x there is a "tile," that is, a closed rectangle with x as centre, and in this tile a unique function $g(x)$,

such that $f[x, g(x)]$ is identically zero throughout the tile, and further

$$f_x + g'(x) f_y = 0, \tag{1}$$

or, symbolically, $$\left(\frac{d}{dx} + y' \frac{d}{dy}\right) f(xy) = 0,$$

where, after differentiating, we have to insert $g(x)$ for y.

These tiles overlap, but, since in each tile the function $g(x)$ is unique, it follows that the value of $g(x)$ is independent of the particular tile used in determining its value, and is the same whether or no that tile was the one with x as centre. Thus we have a unique function $g(x)$ defined throughout the whole neighbourhood, and it has a differential coefficient at each point, given by the identical equation (1).

Now, since f has a second differential at the point (a, b), f_x and f_y both have first differentials there, and therefore have total differential coefficients with respect to x when we replace y by $g(x)$. Also the right-hand, and therefore the left-hand side of (1) has a total differential coefficient, whose value is zero. Thus, since $f_y(x)$ is not zero at (a, b), we may apply Lemma 2, and say that $g'(x)$ has a first differential coefficient at the point (a, b), and that it is given by totally differentiating the identity (1) with respect to x, and putting $x = a$, $y = b$. That is, $g(x)$ possesses a second differential coefficient, and it is given by

$$f_{aa} + 2f_{ab} g'(a) + f_{bb} \{g'(a)\}^2 + f_b g''(a) = 0,$$

or, say, symbolically

$$\left(\frac{d}{dx} + g' \frac{d}{dy}\right)^2 f(x, y) = 0 \quad (x = a,\ y = b),$$

that is, it is obtained by equating to zero the total differential coefficient of the second order of $f(x, y)$ with respect to x, when $y = g(x)$.

It will be noticed that we have, in performing the total differentiation, made no distinction between f_{ab} and f_{ba}, in accordance with the results proved in my paper "On Differentials."

This proves the theorem when $n = 2$.

Again, if $n = 3$, not only, as we saw, is f_y different from zero at each point of the neighbourhood of (a, b), but at each such point f has a second differential, so that the above reasoning applies, and we may assert that at each such point $g(x)$ has a second differential given by

$$\left(\frac{d}{dx} + g' \frac{d}{dy}\right)^2 f(x, y) = 0,$$

that is, by $$(f_{xx}, \ldots \mathcal{X} 1, g')^2 + f_y g''(x) = 0. \tag{2}$$

The reasoning by which we now deduce the existence and value of $g'''(a)$ from (2), is precisely similar to that by which we deduced the existence and value of $g''(a)$ from (1) in the case when $n = 2$.

For, since f has a third differential at (a, b), f_{xx}, f_{xy} and f_{yy} have first differentials there. Also $g'(x)$ has a first differential coefficient, and therefore a first differential at the same point. Since the product and the sum of functions having a first differential at (a, b) is a function having a first differential there, it follows that the quadratic $(f_{xx}, \ldots \mid 1, g')^2$ has a first differential at (a, b). Moreover f_y has a first differential at the same point. Hence both these functions $(f_{xx}, \ldots \mid 1, g')^2$, and f_y have total differential coefficients with respect to x, when we replace y by $g(x)$. Again the right-hand side, and therefore the left-hand side of (2) has the total differential coefficient zero. Thus, since f_b is different from zero, we may apply the Lemma, and say that $g''(x)$ has a first differential coefficient at the point (a, b), and that it is given by totally differentiating the identity (2) with respect to x, and putting $x = a$, $y = b$. That is, $g'''(a)$ exists, and is given by

$$(f_{aaa}, \ldots \mid 1, g')^3 + 3\{f_{ab} + g'(a) f_{bb}\} g'' + f_b g''' = 0,$$

or, symbolically, by

$$\left(\frac{d}{dx} + g' \frac{d}{dy}\right) f(x, y) = 0 \quad (x = a,\ y = b).$$

This proves the theorem for $n = 3$. We have now only to notice that, if we have proved the theorem for $n = r$, it follows by corresponding reasoning that it is true for $n = r+1$. Hence, by induction, the truth of the theorem follows.

9. The equations giving in order the successive differential coefficients, when written out at length are as follows :—

(1) $\left(\frac{d}{dx} + y' \frac{d}{dy}\right) f = 0$, or $f_x + y' f_y = 0$;

(2) $\left(\frac{d}{dx} + y' \frac{d}{dy}\right)^2 f = 0$, or $(f_{xx}, f_{xy}, f_{yy} \mid 1, y')^2 + f_y y'' = 0$;

(3) $(f_{xxx}, \ldots \mid 1, y')^3 + 3(f_{xy} + y' f_{yy}) y'' + f_y y''' = 0$;

(4) $(f_{xxxx}, \ldots \mid 1, y')^4 + 6(f_{xxy}, \ldots \mid 1, y')^2 y'' + 3 f_{yy} y''^2$
$+ 4(f_{x,y} + y' f_{yy}) y''' + f_y y^{(4)} = 0$;

$$(5)\quad \left(\frac{d^5 f}{dx^5}, \ldots \mathcal{X} 1, y'\right)^5 + \frac{5.4}{1.2}\left(f_{xxxy}, \ldots \mathcal{X} 1, y'\right)^3 y'' + \frac{5.4.3}{1.2.3}(f_{xxy}, \ldots \mathcal{X} 1, y')^2 y''' + 5(f_{xy}, \ldots \mathcal{X} 1, y')\, y^{(4)} + 15(f_{xyy}, \ldots \mathcal{X} 1, y')\, y''^2 + 10 f_{yy} y'' y''' + f_y y^{(5)} = 0,$$

and so on.

It should be noticed that it follows from the mode of formation of these equations that the coefficients are partial differential coefficients of f such that, if any coefficient involves r differentiations with respect to y, it is multiplied by precisely r differential coefficients of y.

10. If in Theorem 5 we interpret the symbol x to mean the ensemble $(x_1, x_2, \ldots, x_n)$, so that $f(x, y)$ means $f(x_1, x_2, \ldots, x_n, y)$, the theorem becomes a theorem in the theory of functions of $(n+1)$-variables, no alteration in the wording being required except in (5), which should now read as follows:—

(5) *Finally, if f possesses at the point (a, b) a first differential, then this function y of x possesses at the point $x = a$ a first differential, whose value Δy is given by the symbolic equation*

$$\left(h\frac{d}{dx} + \Delta y \frac{d}{dy}\right) f = 0$$

(*that is, written out in full,*

$$h_1 f_{x_1} + h_2 f_{x_2} + \ldots + h_n f_{x_n} + \Delta y f_y = 0),$$

in which the x's are to be replaced by a's and y by b.

The proof of this theorem is almost word for word the same as before; the insignificant verbal alterations have been already given in footnotes. For complete clearness the part of the proof which refers to (5) is given in full below.

"Finally, if f has a first differential at the point (a, b), there is a closed neighbourhood of the point such that throughout it

$$f(a+h, b+k) = h(f_a + e) + k(f_b + e'),$$

that is, when written out fully,

$$f(a_1+h_1, \ldots, a_n+h_n, b+k) = h_1(f_{a_1}+e_1) + \ldots + h_n(f_{a_n}+e_n) + k(f_b+e'),$$

where the e's have the limit zero when the h's and k's approach zero in any manner.

Hence, inserting for $b+k$ our function y,

$$0 = (x-a)(f_a+e) + (y-b)(f_b+e'),$$

so that $$y = b+(x-a)\left(-\frac{f_a+e}{f_b+e'}\right) = b+(x-a)\left(-\frac{f_a}{f_b}+\epsilon\right),$$

where, when x approaches a in any manner, y being continuous, has the limit b; and therefore the e's all have the limit zero, and hence the same is true of the ϵ's. Taking all the x's except one to have the corresponding values a, and then proceeding to the limit with the remaining x, after dividing the equation by $x-a$, we see that the corresponding dy/dx exists at the point a, and has the value $-f_a/f_b$.

Hence the preceding equation proves that y has at the point a a first differential which is given by the equation

$$\Delta y = (x-a)(-f_a/f_b),$$

or, at length, $$\Delta y = h_1(-f_{a_1}/f_b)+\ldots+h_n(-f_{a_n}/f_b),$$

that is, $$\Delta y f_b+h_1 f_{a_1}+\ldots+h_n f_{a_n} = 0,$$

or, as we may write it, symbolically,

$$\left(h_1\frac{\partial}{\partial x_1}+\ldots+h_n\frac{\partial}{\partial x_n}+\Delta y\frac{\partial}{\partial y}\right)f = 0,$$

or, shortly, $$\left(h\frac{\partial}{\partial x}+\Delta y\frac{\partial}{\partial y}\right)f = 0,$$

in which symbolic equation we are to understand that the values of x and y are after differentiation to be changed to a and b."

11. Theorem 6 may similarly be interpreted in space of $(n+1)$-dimensions. We merely have to change "differential coefficient" in the enunciation into "differential." It is unnecessary to reproduce the proof, but it may be well to give the equations determining the successive differentials more at length.

Corresponding to the equation (1) of § 8, we now have

$$\left(h\frac{d}{dx}+\Delta y\frac{d}{dy}\right)f = 0, \qquad (1)$$

holding at every point of the closed neighbourhood, where, after differentiation, we have to insert $g(x)$ for y, and Δy denotes the differential of this function of the x's at the point x, that is $(x_1, x_2, \ldots, x_n)$.

Thus Δy does not involve y, and if we operate upon it with the operator $\left(h\frac{d}{dx}+\Delta y\frac{d}{dy}\right)$, we get the second differential $\Delta^2 y$ if this exists.

Now this operator $\left(h\frac{d}{dx}+\Delta y\frac{d}{dy}\right)$ is the operator which gives the total

differential, when it exists, of a function of all the x's and the variable y, and therefore, when we replace y by $g(x)$, gives the total differential of such a function with respect to the x's alone, along the curve $y = g(x)$. Applying this operator to the identity (1), therefore, we get a relation which is true at the point a, that is $(a_1, a_2, \ldots, a_n)$, the argument given in § 8 applying now, when we recall that the product and the sum of functions having an n-th differential at a point is a function having at that point an n-th differential. Hence the function $g(x)$, or y, has a second differential at the point a, and it is given by the symbolic equation

$$\left(h\frac{d}{dx}+\Delta y\frac{d}{dy}\right)\left(h\frac{d}{dx}+\Delta y\frac{d}{dy}\right)f=0,$$

that is, by what was pointed out about the effect of the operator on Δy,

$$\left(h\frac{d}{dx}\right)^2 f+2\Delta y\left(\frac{d}{dx}\right)\left(\frac{d}{dy}\right)f+(\Delta y)^2\left(\frac{d}{dy}\right)^2 f+\frac{df}{dy}\Delta^2 y=0,$$

where
$$\left(h\frac{d}{dx}\right)^2 f=\left(h_1\frac{d}{dx_1}+\ldots+h_n\frac{d}{dx^n}\right)^2 f$$
$$=h_1^2 f_{a_1a_1}+\ldots+h_n^2 f_{a_na_n}+2h_1h_2f_{a_1a_2}+\ldots$$
$$=D^2f,$$

the second differential of f when y is constant, and, similarly,

$$\frac{d}{dx}\frac{d}{dy}f=Df_y.$$

(Here it is to be remarked that we have identified mixed differential coefficients which only differ in the order of differentiation, which is correct, by the fundamental theorem in " The Theory of Differentials.*)

Thus the equation $\left(h\frac{d}{dx}+\Delta y\frac{d}{dy}\right)^2 f=0$

may be written $D^2f+2\Delta yDf_y+(\Delta y)^2 f_{yy}+f_y\Delta^2 y=0,$

or $(D^2f,\ Df_y,\ f_{yy}\text{X}1,\ \Delta y)^2+f_y\Delta^2 y=0,$ (2)

a form which corresponds precisely to (ii.) *of* § 9.

---

* *Loc. cit.*

Similarly, when $n = 3$, we have for the third differential of y at the point a, the symbolic equation

$$\left(h\frac{d}{dx}+\Delta y\frac{d}{dy}\right)^3 f = 0,$$

or, which is the same thing,

$$(D^3f,\ D^2f_y,\ Df_{yy},\ f_{yyy}\mathcal{X}1,\ \Delta y)^3+3(Df_y+\Delta y f_{yy})\,\Delta^2 y+f_y\Delta^3 y = 0. \quad (3)$$

It is unnecessary to dwell longer on these equations. Summing up we may say *the r-th differential of y at the point a is given symbolically by the equation*

$$\left(h\frac{d}{dx}+\Delta y\frac{d}{dy}\right)^r f = 0,$$

just as, in the simple case when there is only one x, it was given by

$$\left(\frac{d}{dy}+y'\frac{d}{dy}\right)^r f = 0.$$

This equation when expanded has precisely the same form as before, the successive differential coefficients of y being replaced by the successive differentials Δy, $\Delta^2 y$, $\Delta^3 y$, ..., $\Delta^r y$, *and differentiation with respect to x being replaced by the operator D, which gives the partial differential of a function of the x's and y with respect to the x's alone.*

12. It should be noticed that in Theorem 5, § 6, although the uniqueness of the solution is involved in the proof of the continuity of y, considered as a function of x in the neighbourhood of the point $x = a$, each such solution is continuous for any value of x such that on the corresponding ordinate there is only one zero of $f(x, y)$, the neighbourhood being chosen sufficiently small; in particular, this is the case at the point $x = a$ itself, if there is no sequence of values of y with b as limit such that for each $f(a, y) = 0$. This follows at once from the reasoning used in the proof of § 6. If this be the case, the reasoning used in the proof of the property (5) still applies whether or no the solution is unique; that is to say, if $f(x, y)$ has a first differential at (a, b), each of the solutions has a differential coefficient at the point $x = a$, and the value of this differential coefficient is the same for all solutions and is given by

$$f_a+f_b\frac{dy}{dx} = 0.$$

An interesting application of this is constituted by the following theorem.

13. THEOREM 7.—*If $g(x)$ is a function of x which has the value b when $x = a$, and possesses at the point $x = a$ a finite non-vanishing differential coefficient, then there exists at least one function x of y which has the value a when $y = b$, and in a certain closed neighbourhood of the point $y = b$ renders the equation*

$$y = g(x)$$

an identity; further, all these functions possess at the point $y = b$ a common differential coefficient whose value is $1/g'(a)$.

To prove this, we have, in fact, only to put

$$f(x, y) = y - g(x),$$

and apply the above. For, when $x = a$, there is no value of y other than b which makes $f(x, y)$ vanish.

14. It now follows at once from Theorem 5 that if the function $g(x)$, mentioned in the enunciation of the preceding theorem is in a closed neighbourhood of the point $x = a$, a monotone function of x, the function x of y is unique. This is in particular the case if $g'(x)$ exists in the neighbourhood of $x = a$, and is nowhere zero. (Theorem 5, Cor. 1.)

Applying Theorem 6, § 7, we get the following theorem, involving a most important case of uniqueness of the function x of y.

THEOREM 8.—*If $g(x)$ is a function of x which has the value b when $x = a$, and possesses at the point $x = a$ a finite n-th differential coefficient where $n \geqslant 2$, and if $g'(a)$ is different from zero, there is one, and only one, function x of y which has the value a when $y = b$, and renders the equation*

$$y = f(x)$$

an identity in a certain closed neighbourhood of the point $y = b$.

PART III.

§§ 14–16. *Existence and Differentials of Implicit Functions defined by Two or More Equations.*

14. THEOREM 9.—*If* $f_1(x, y), f_2(x, y), \ldots, f_r(x, y)$ *are* r *functions of the* m *variables* x *and the* r *variables* y, *which are zero when the* x'*s are equal to* a'*s and the* y'*s to* b'*s, i.e., at the point* (a, b), *and have* n*-th differentials there, where* $n \geqslant 2$, *and if the Jacobian* J *of the* f'*s with respect to the* y'*s,*

$$\begin{vmatrix} \frac{df_1}{dy_1}, & \ldots, & \frac{df_r}{dy_1} \\ \frac{df_1}{dy_2}, & \ldots, & \frac{df_r}{dy_2} \\ \ldots & \ldots & \ldots \\ \frac{df_1}{dy_r}, & \ldots, & \frac{df_r}{dy_r} \end{vmatrix}$$

is not zero at the point (a, b), *then there exist unique functions* $y_1, y_2, \ldots, y_r$ *of the* m *variables* x, *which have the values* $b_1, b_2, \ldots, b_r$ *at the point* a, *and, throughout a closed neighbourhood of that point, make all the* f'*s identically zero. Moreover these functions* y *have* n*-th differentials at the point* a, *whose values may be obtained from equations, which in symbolic form are*

$$\left(h\frac{d}{dx} + \Delta y \frac{d}{dy}\right)^i f_j = 0 \quad (i = 1, 2, \ldots, n;\ j = 1, 2, \ldots, r).$$

Since the Jacobian J is not zero, all its principal minors are not zero, and we may assume, without loss of generality, that it has been so arranged that the leading principal minor is not zero. It then follows that one of the principal minors of that principal minor is not zero, and we may assume that the determinant is so arranged that that principal minor is the leading minor. Proceeding thus, we may assume that the determinant has been so arranged that none of the leading minors,

$$J_1 = \frac{df_1}{dy_1}, \qquad J_2 = \begin{vmatrix} \frac{df_1}{dy_1}, & \frac{df_2}{dy_1} \\ \frac{df_1}{dy_2}, & \frac{df_2}{dy_2} \end{vmatrix}, \qquad J_3 = \begin{vmatrix} \frac{df_1}{dy_1}, & \frac{df_2}{dy_1}, & \frac{df_3}{dy_1} \\ \frac{df_1}{dy_2}, & \frac{df_2}{dy_2}, & \frac{df_3}{dy_2} \\ \frac{df_1}{dy_3}, & \frac{df_2}{dy_3}, & \frac{df_3}{dy_3} \end{vmatrix} \ldots,$$

are zero at the point (a, b). Then, since

$$\frac{df_1}{db_1} \neq 0,$$

and f_1 has an n-th differential at the point (a, b), where $n \geqslant 2$, there is, by Theorem 6, one, and only one, function y_1 of the remaining $(m+r-1)$ variables x and y which has the value b_1 at the point $(a_1, \ldots, a_m, b_2, \ldots, b_r)$, and, in a certain closed neighbourhood of that point makes f_1 identically zero. Moreover, this function y_1 has an n-th differential at the point in question.

Now, replace y_1 in f_2 by the function so found, and call the result F_2. This is a function of the m variables x and the remaining $(r-1)$ variables y, which has the value zero at the point $(a_1, \ldots, a_m, b_2, \ldots, b_r)$, since $y_1 = b_1$ there.

Also, by Theorem 2, it has an n-th differential at the same point since f_1 and y_1 both have n-th differentials. Also dF_2/dy_2 is not zero at the point, since, F_2 having a differential with respect to the x's and y's, and therefore with respect to the y's, at the point and in its neighbourhood,

$$\frac{dF_2}{dy_2} = \frac{df_2}{dy_2} + \frac{df_2}{dy_1}\frac{dy_1}{dy_2},$$

where

$$\frac{df_1}{dy_2} + \frac{df_1}{dy_1}\frac{dy_1}{dy_2} = 0,$$

so that

$$\begin{vmatrix} -\dfrac{dF_2}{dy_2} + \dfrac{df_2}{dy_2}, & \dfrac{df_2}{dy_1} \\ \dfrac{df_1}{dy_2}, & \dfrac{df_1}{dy_1} \end{vmatrix} = 0,$$

or

$$J_1 \frac{dF_2}{dy_2} + J_2 = 0.$$

Since J_1^2 and J_2 are both different from zero at the point, this gives a finite value different from zero for dF_2/db_2.

We can therefore again apply Theorem 6, and assert that one, and only one, function y_2 of the m variables x and the remaining $(r-2)$ variables y exists, which has the value b_2 at the point $(a_1, \ldots, a_m, b_3, \ldots, b_r)$, and in a certain closed neighbourhood or that point makes F_2 identically zero. Moreover this function y_2 has an n-th differential at the point.

Now, the effect of inserting this function y_2 in F_2 is obviously the same as that of inserting this y_2 in the y_1 previously found, and then in f_2 inserting this last y_1, and the function y_2 wherever it occurs explicitly Doing this both in f_1 and in f_2 they become functions of the $(m+r-2)$ variables which vanish identically. Making the same change in f_3 and denoting the result by F_3, we thus get the three equations

$$\frac{dF_3}{dy_3} = \frac{df_3}{dy_3} + \frac{df_3}{dy_2}\frac{dy_2}{dy_3} + \frac{df_3}{dy_1}\frac{dy_1}{dy_3},$$

$$0 = \frac{df_2}{dy_3} + \frac{df_2}{dy_2}\frac{dy_2}{dy_3} + \frac{df_2}{dy_1}\frac{dy_1}{dy_3},$$

$$0 = \frac{df_1}{dy_3} + \frac{df_1}{dy_2}\frac{dy_2}{dy_3} + \frac{df_1}{dy_1}\frac{dy_1}{dy_3}$$

holding at the point in question, whence

$$J_2\frac{dF_3}{dy_3} + J_3 = 0.$$

Thus dF_3/dy_3 is finite and different from zero at the point $(a_1, \ldots, a_m, b_4, \ldots, b_r)$, at which, as before, F_3 vanishes, and has an n-th differential. Thus we can again apply the theorem and deduce the existence of one, and only one, function y_3 of the $(m+r-3)$ variables having the value b_3 at the point, and in a certain closed neighbourhood of it making F_3 identically zero. This process may be continued and it is evident that we shall at each stage obtain unique functions $y_1, y_2, \ldots, y_i$, of the remaining $(m+r-i)$ variables having the proper values at the point considered, and having n-th differentials there, and making $f_1, f_2, \ldots, f_g$ vanish identically in a certain neighbourhood of the point. Inserting these values in f_{i+1} and denoting the result by F_{i+1}, we then clearly get the equations

$$\frac{dF_{i+1}}{dy_{i+1}} = \frac{df_{i+1}}{dy_{i+1}} + \frac{df_{i+1}}{dy_i}\frac{dy_i}{dy_{i+1}} + \ldots + \frac{df_{i+1}}{dy_1}\frac{dy_1}{dy_{i+1}},$$

$$0 = \frac{df_i}{dy_{i+1}} + \frac{df_i}{dy_i}\frac{dy_i}{dy_{i+1}} + \ldots + \frac{df_i}{dy_1}\frac{dy_1}{dy_{i+1}}, \quad \ldots.$$

holding at the point, so that

$$J_i\frac{dF_{i+1}}{dy_{i+1}} + J_{i+1} = 0.$$

Thus again we can apply the theorem and proceed a stage further. This

may be continued until we have exhausted all the y-coordinates, when we shall have expressed each of them in one, and only in one, way, so as to have the values b at the point a, and, in a certain closed neighbourhood of that point, to make the r functions f vanish identically; moreover, these functions y of the x's have n-th differentials at the point. This being so we have only to form the total differentials of the functions f with respect to the x's, regarding the y's as being these functions, and equate the result to zero, to obtain equations which determine the values of the differentials of the y's at the point a; these equations may be written, symbolically, in the form

$$\left(h\frac{d}{dx}+\Delta y\frac{d}{dy}\right)^i f_j = 0 \quad (i=1, 2, \ldots, n;\ j=1, 2, \ldots, r).$$

THEOREM 10.—*If $f_1(x, y)$, $f_2(x, y)$, ..., $f_r(x, y)$ are r functions of the m variables x and the r variables y which are zero at the point (a, b), and have first differentials at the point (a, b) and in a closed neighbourhood of that point first differentials with respect to the y's, and if in that closed neighbourhood the Jacobian J of the f's with respect to the y's is not zero, and the same is true of one of its principal minors J_{r-1}, and of one of the principal minors J_{r-2} of J_{r-1}, and so on, down to one of the common constituents of $J, J_{r-1}, \ldots, J_2$, then there exist unique functions $y_1, y_2, \ldots, y_r$ of the m variables x, which have the values $b_1, b_2, \ldots, b_r$ at the point a, and, throughout a closed neighbourhood of that point, make all the f's identically zero. Moreover, these functions y have first differentials at the point a, whose values may be obtained by solving the equations*

$$\left(h\frac{d}{dx}+\Delta y\frac{d}{dy}\right) f_i = 0,$$

that is, $$h_1\frac{df_i}{dx_1}+h_2\frac{df_i}{dx_2}+\ldots+h_m\frac{df_i}{dx_m}+\Delta y_1\frac{df_i}{dy_1}+\ldots+\Delta y_r\frac{df_i}{dy_r}=0,$$

for all integers i from 1 to r both inclusive.

The proof of this theorem is essentially the same as that of the preceding theorem, quoting Theorem 5, Cor. 1, instead of Theorem 6.

COR. 1.—*The conditions that $J, J_{r-1}, \ldots, J_2, J_1$ should not vanish in a closed neighbourhood of the point (a, b), being replaced by the conditions that they should not vanish at the point and be continuous there, the theorem still holds.*

COR. 2.—*The same conditions being replaced by the conditions that J should not vanish at the point, and all the partial differential coefficients of the f's with respect to the y's should be continuous at the point, the theorem still holds.*

COR. 3.—*The conditions that the f's should have first differentials with respect to the y's in a closed neighbourhood of the point, and that $J, J_{r-1}, \ldots, J_1$ should not vanish throughout that neighbourhood, may be replaced by the conditions that all the partial differential coefficients of the f's with respect to the y's should be continuous throughout a closed neighbourhood of the point, and the Jacobian J should not be zero at the point, the theorem then still holds.*

A particular case of this is a theorem due to Dini that, if J does not vanish at the point (a, b), and all the partial differential coefficients of the f's are continuous, there is a unique set of solutions $y_1, \ldots, y_r$, each of which then will have a first differential at the point.

16. If in the preceding theorem we only assume that at the point (a, b), but not necessarily in the neighbourhood, $J, J_{r-1}, \ldots$ are not zero, it is evident that we still get at least one set of solutions, the uniqueness of this set being the only thing affected. An argument similar to that given in § 12 shews that each such solution is continuous for any ensemble x, such that there is only one ensemble y for which the given functions $f_1, f_2, \ldots, f_r$ all vanish. In particular this will be the case at the point $x = a$, provided the point $y = b$ is not a limiting point of points y for which $f_1(a, y), f_2(a, y), \ldots, f_r(a, y)$ all vanish.

Supposing this to be the case, the reasoning by which the existence of the first differentials was demonstrated still holds, and the equations determining them are the same for all possible sets of solutions.

We thus easily get the following theorem, which corresponds to Theorem 7.

THEOREM 11.—*If $g_1(x), g_2(x), \ldots, g_r(x)$ are functions of the r variables x which have the values $b_1, b_2, \ldots, b_r$ when the x's have the values $a_1, \ldots, a_r$, and possess at the point $x = a$ a finite non-vanishing Jacobian J, which has a non-vanishing principal minor J_{r-1}, and so on, down to J_1, then there exists at least one set of functions x of the r variables y which*

have the values $a_1, \ldots, a_r$ *at the point* $y = b$, *and which in a certain closed neighbourhood of that point render the equations*

$$y_1 = f_1(x), \quad y_2 = f_2(x), \quad \ldots, \quad y_r = f_r(x),$$

identities; further, all these sets of functions possess at the point $y = b$ *a common Jacobian* J' *whose value is* $1/J$.

Moreover, corresponding to Theorem 8, we may assert the uniqueness of the set of solutions, provided the f's have n-th differentials, where $n \geqslant 2$, and it will follow that the solutions themselves possess n-th differentials at the point $x = a$.

[I take this opportunity of pointing out an oversight in one of my previous papers, viz., that on "Oscillating Successions of Continuous Functions," pp. 303, 304. The set of points in Cor. 2 is only an ordinary inner limiting set when certain of the points at which the upper functions $= k$ are added to it. A similar remark applies to the lower function, and to the statement regarding the measure of the oscillation.

I may add that this correction does not affect the validity of the reasoning of my paper on "Trigonometrical Series," *Mess. Math.*, 1908, pp. 44, 48, though it necessitates a slight modification in the wording of the proof.]

ON THE RELATION BETWEEN PFAFF'S PROBLEM AND THE CALCULUS OF VARIATIONS

By A. C. DIXON.

[Received January 20th, 1909.—Read February 11th, 1909.]

IN the calculus of variations it is usual to put on one side as exceptional those integrals in which the highest derivative of the dependent variable occurs linearly. In the present note it is found that the general problem of the minimum of a simple integral is reducible to that of an integral in which the derivatives of the dependent variables occur, some linearly and some not at all. By the Pfaffian reduction the integral is brought to one invariable form

$$\int \left(dw + \sum_1^m v_r du_r \right),$$

where w, u_1, u_2, ..., u_m, v_1, ..., v_m are the variables, and different problems of the calculus are only distinguished by (1) the number of variables, (2) the conditions at the limits, (3) the restrictions as to continuity. The results lead at once to the theories of Hamilton, Jacobi, Hilbert* and Mayer.†

1. Take the expression

$$U = \int \left(\sum_1^n X_r dx_r \right),$$

where X_1, X_2, ..., X_n are given functions of the variables x_1, x_2, ..., x_n, and these are unknown functions of a parameter t, which runs through all the values in a certain range, say from 0 to 1. Then we may write the expression for U as

$$\int_0^1 (X_1 \dot{x}_1 + X_2 \dot{x}_2 + \ldots + X_n \dot{x}_n)\, dt.$$

---

* *Gött. Nachr.*, 1900.

† *Math. Ann.*, Vol. 58.

If the functions $x_1, x_2, \ldots$ are varied we have by the ordinary methods

$$\delta U = [\Sigma X \delta x]_0^1 + \int_0^1 \sum_s \left\{ \left(\sum_r \frac{\partial X_r}{\partial x_s} \dot{x}_r - \dot{X}_s \right) \delta x_s \right\} dt$$

$$= [\Sigma X \delta x]_0^1 + \int_0^1 \sum_r \sum_s (X_{rs} \dot{x}_r \delta x_s)\, dt, \qquad (1)$$

where

$$X_{rs} = \frac{\partial X_r}{\partial x_s} - \frac{\partial X_s}{\partial x_r}.$$

Hence for a stationary value of U the rules of the calculus of variations give

$$\sum_r X_{rs} \dot{x}_r = 0 \quad (s = 1, 2, \ldots, n), \qquad (2)$$

a system of n ordinary differential equations, having a skew symmetrical determinant.

When n is even this determinant will not in general vanish identically; its vanishing is one of the conditions for a stationary value, which determines one of the variables $x_1, x_2, \ldots, x_n$ as a function of the rest; the derivatives $\dot{x}_1, \dot{x}_2, \ldots$ do not enter into the condition, and so there is no arbitrary constant of integration. By the use of this condition the number of variables is reduced by one and made odd.

When n is odd, the skew determinant vanishes and the n equations (2) are equivalent to $(n-1)$ only, so that the ratios $\dot{x}_1 : \dot{x}_2 : \ldots : \dot{x}_n$ are in general determinate: the equations are those which are used in the solution of Pfaff's problem. If they have been integrated in the form

$$u_r = a_r \quad (r = 1, 2, \ldots, n-1),$$

it remains to find the constants $a_1, \ldots, a_{n-1}$ by considering the terms at the limits in δU and the initial and final conditions.

Even when n is odd there may be conditions that are not differential equations, as, for instance, if

$$X_s = 0 \quad (s = p+1, p+2, \ldots, n),$$

and $n > 2p$. The system (2) then includes the $(n-p)$ equations

$$\sum_{r=1}^{p} \frac{\partial X_r}{\partial x_s} \dot{x}_r = 0 \quad (s = p+1, \ldots, n), \qquad (3)$$

which are linear in p quantities and therefore give $n-2p+1$ conditions, enabling us to eliminate $n-2p+1$ of the variables, and so reduce the number to $2p-1$, of whose differentials only p occur.

Since n is odd the reduced form of $\Sigma X dx$ is

$$dw + \sum_1^m v_r du_r,$$

where $$n = 2m+1,$$

and the $2m$ integrals of the system (2) are

$$u_r = a_r, \quad v_r = a_{m+r} \quad (r = 1, 2, \ldots, m).$$

This could, in fact, be seen by writing

$$U = \int_0^1 (\dot{w} + \Sigma v\dot{u}) dt,$$

which gives $$\delta U = [\delta w + \Sigma v\, \delta u]_0^1 + \int_0^1 \Sigma(\dot{u}\, \delta v - \dot{v}\, \delta u)\, dt,$$

and, in place of (2), the equations

$$\dot{u}_r = 0, \quad \dot{v}_r = 0 \quad (r = 1, 2, \ldots, m).$$

2. The question of the boundary conditions now arises, and it is clear that we cannot assign values to all the variables $x_1, x_2, \ldots, x_n$ at each limit, for that would give two determinations of each of the $(n-1)$ arbitrary constants, and nothing to shew that the two agreed. Suppose any relations connecting the initial and final values to be given: these can be converted into equations connecting the initial and final values of $w, u_1, u_2, \ldots, v_1, v_2, \ldots$, which we may distinguish by single and double dashes respectively.

Then, if the equations are written

$$\phi_i(w', w'', u', u'', v', v'') = 0 \quad (i = 1, 2, \ldots, p), \tag{4}$$

the expression $$\delta w'' - \delta w' + \Sigma(v''\delta u'' - v'\delta u')$$

must vanish for all values of $\delta w''$, $\delta w'$, ... that satisfy the p conditions

$$\frac{\partial \phi}{\partial w'}\delta w' + \frac{\partial \phi}{\partial w''}\delta w'' + \frac{\partial \phi}{\partial u_1'}\delta u_1' + \ldots = 0.$$

Hence all determinants must vanish in the matrix

$$\left\| \begin{array}{cccccccccc} 1, & -1, & v_1', & -v_1'', & v_2', & -v_2'', & \ldots, & 0, & 0, & \ldots \\ \dfrac{\partial \phi_1}{\partial w'}, & \dfrac{\partial \phi_1}{\partial w''}, & \dfrac{\partial \phi_1}{\partial u_1'}, & \dfrac{\partial \phi_1}{\partial u_1''}, & \dfrac{\partial \phi_1}{\partial u_2'}, & \dfrac{\partial \phi_1}{\partial u_2''}, & \ldots, & \dfrac{\partial \phi_1}{\partial v_1'}, & \dfrac{\partial \phi_1}{\partial v_1''}, & \ldots \\ \ldots & \ldots & \ldots & & & & & & & \\ \dfrac{\partial \phi_p}{\partial w'}, & \dfrac{\partial \phi_p}{\partial w''}, & \ldots & & & & & & & \end{array} \right| . \tag{5}$$

In general there are here $2n-p$ conditions, to be added to the system (4), making altogether $2n$, which would determine w', w'', u', u'', v', v'', but again not generally in such a way that $u' = u''$, $v' = v''$.

3. A suitable set of boundary conditions can be assigned as follows. Let dU be expressed in the form $\sum_1^{m+1} \theta_r d\xi_r$. Then the terms at the limits in δU become

$$[\Sigma \theta \delta \xi]_0^1,$$

and if the values of $\xi_1, \ldots, \xi_{m+1}$ are assigned at the two limits these terms vanish and the problem becomes determinate in general, for $\xi_1, \ldots, \xi_{m+1}$, $u_1, \ldots, u_m$, $v_1, \ldots, v_m$ are $3m+1$ functions of the $2m+1$ variables $x_1, \ldots, x_n$, and are therefore connected by m relations. Taking these relations at the two limits we have $2m$ equations for the $2m$ constants, which are the values of $u_1, \ldots, u_m$, $v_1, \ldots, v_m$.

If only some of the values of $\xi_1, \ldots, \xi_{m+1}$, say those of $\xi_1, \ldots, \xi_p$ are assigned at one limit, then, since $\delta\xi_{p+1}, \ldots, \delta\xi_{m+1}$ are unrestricted, we must have $\theta_{p+1}, \ldots, \theta_{m+1}$ all $= 0$ at that limit, the whole number of conditions at that limit being thus raised to $m+1$ as before; the same may happen at the other limit.

Hence, if we call the form $\sum_1^{m+1} \theta_r d\xi_r$ a "penultimate" form, we can assign suitable boundary conditions by *choosing any two penultimate forms and prescribing any number* ($\leqslant m+1$) *of relations to be satisfied at one limit by the variables whose differentials occur in the one penultimate form, and any number* ($\leqslant m+1$) *of relations to be satisfied at the other limit by the variables whose differentials occur in the other penultimate form.* It is easily seen that the two penultimate forms need not be the same,* and that in any such form the variables ξ can be replaced by $m+1$ functions of them, so long as these last are functionally independent.

4. The above theory may be applied to any of the ordinary problems of the calculus, in which simple integrals only occur. For instance, to treat

$$\int_{x_0}^{x_1} F(x, y_1, y_2, \ldots, y_m, y_1', y_2', \ldots, y_m')\, dx,$$

* Generally, however, the problem is made soluble and definite by taking the two forms the same, and supposing $\xi_1, \xi_2, \ldots$ continuous; see below, § 5.

we may use undetermined multipliers and discuss the form

$$\int_x^{x_1} \{F(x, y_1, y_2, \ldots, z_1, z_2, \ldots)+\lambda_1(y_1'-z_1)+\lambda_2(y_2'-z_2)\ldots\}\, dx,$$

or $$\int \{(F-\lambda_1 z_1-\lambda_2 z_2-\ldots)\, dx+\lambda_1 dy_1+\lambda_2 dy_2+\ldots\}, \text{ say } W.$$

In this form there are $3m+1$ variables, namely x, y_1, y_2, ..., z_1, z_2, ..., λ_1, λ_2, ..., but only differentials of the first $m+1$, and hence the conditions for a minimum include m equations that are not differential.

These are at once seen to arise from equating to zero the coefficients of δz_1, δz_2, ... under the integral sign in δW, and are

$$\lambda_1 = \frac{\partial F}{\partial z_1}, \quad \lambda_2 = \frac{\partial F}{\partial z_2}, \quad \ldots.$$

The integral now takes the form of Hilbert and Mayer

$$\int \left\{\left(F-z_1\frac{\partial F}{\partial z_1}-z_2\frac{\partial F}{\partial z_2}-\ldots\right) dx+\frac{\partial F}{\partial z_1} dy_1+\frac{\partial F}{\partial z_2} dy_2+\ldots\right\}, \text{ say } \Omega.$$

The next step is to form the differential equations, $2m$ in number. These include the m relations

$$y_1' = z_1, \quad y_2' = z_2, \quad \ldots,$$

which come from the coefficients of $\delta\lambda_1$, $\delta\lambda_2$, ... in δW, or less simply from those of δz_1, δz_2, ... in $\delta\Omega$. The whole system is the same as that which must be solved in order to reduce $d\Omega$ to its canonical form

$$dw+\sum_1^m v_r du_r,$$

and the integrals of the system are, in fact,

$$u_r = a_r, \quad v_r = a_{m+r} \quad (r = 1, 2, \ldots, m).$$

Thus, if we take $$u_r = a_r \quad (r = 1, 2, \ldots, m),$$

and use these equations to eliminate z_1, z_2, ..., z_m, we have $d\Omega$ reduced to dw, a complete differential, whose integral depends only on the limiting values of x, y_1, ..., y_m, and not on the intermediate values. This includes the theorem of Hilbert and Mayer; it must be noted that the m equations by means of which z_1, ..., z_m are eliminated from $d\Omega$ are not any m integrals of the system, but that du_1, ..., du_m must all occur in the same canonical form of $d\Omega$, that is, when the determinant of the equations (2)

is bordered with m rows and columns, consisting of the derivatives of $u_1, \ldots, u_m$, all the m-th minors of the bordered determinant must vanish.

Another form of the theorem is that the integral Ω is not only stationary, but constant, if the variations of $x, y_1, \ldots, y_m, z_1, \ldots, z_m$ are so restricted that $u_1, \ldots, u_m$ keep the same constant values, and if the initial and final values of $x, y_1, \ldots, y_m$ are unchanged: the restriction leaves us free to choose any path between the given limiting points in the space where $x, y_1, \ldots, y_m$ are coordinates, but determines the values of $z_1, z_2, \ldots, z_m$ at any point of such a path.

5. The theory of Hamilton and Jacobi also follows readily, for if w is expressed in terms of $x, y_1, \ldots, y_m, u_1, \ldots, u_m$ by the elimination of $z_1, z_2, \ldots, z_m$, we have

$$dw = \left(F - \Sigma z_r \frac{\partial F}{\partial z_r}\right) dx + \Sigma \frac{\partial F}{\partial z_r} dy_r - \Sigma v_r du_r,$$

so that

$$\frac{\partial w}{\partial u_r} = -v_r,$$

and the other m integrals of the differential equations, namely,

$$v_r = a_{m+r},$$

can be written

$$\frac{\partial w}{\partial u_r} = \text{const.} \quad (r = 1, 2, \ldots, m).$$

Also

$$\frac{\partial w}{\partial y_r} = \frac{\partial F}{\partial z_r}, \qquad \frac{\partial w}{\partial x} = F - \Sigma z_r \frac{\partial F}{\partial z_r}.$$

The introduction of initial values works out as follows: $u_1, \ldots, v_1, \ldots$ are known functions of $x, y_1, \ldots, z_1, \ldots$, and in these we substitute $a, \eta_1, \eta_2, \ldots, \xi_1, \ldots$ for $x, y_1, y_2, \ldots, z_1, \ldots$, where a is any convenient constant, and $\eta_1, \eta_2, \ldots, \xi_1, \ldots$ are thus defined conversely as functions of $u_1, u_2, \ldots, v_1, \ldots$, and consequently of $x, y_1, y_2, \ldots, z_1, \ldots$, which functions become equal to $y_1, y_2, \ldots, z_1, \ldots$, when $x = a$. Suppose that by this substitution in $u_1, \ldots, v_1, \ldots$, the differential expression $\sum_1^m v_r du_r$ becomes

$$\sum_1^m \lambda_r d\eta_r + \sum_1^m \mu_r d\xi_r;$$

λ_r, μ_r will not involve x. Thus we have identically

$$d\Omega = dw + \sum_1^m \lambda_r d\eta_r + \sum_1^m \mu_r d\xi_r,$$

and, putting

$$x = a, \quad y_r = \eta_r, \quad z_r = \xi_r, \quad w = w\ (a, \eta_1, \ldots, \xi_1, \ldots),$$

and comparing coefficients

$$\lambda_r = \frac{\partial}{\partial \xi_r} F(a, \eta_1, \ldots, \xi_1, \ldots) - \frac{\partial}{\partial \eta_r} w\,(a, \eta_1, \ldots, \xi, \ldots),$$

$$\mu_r = \qquad\qquad - \frac{\partial}{\partial \xi_r} w\,(a, \eta_1, \ldots, \xi_1, \ldots),$$

which hold therefore for all values of x. Hence

$$d\Omega = d\{w(x, y_1, \ldots, z_1, \ldots) - w(a, \eta_1, \ldots, \xi_1, \ldots)\} + \sum_1^m \frac{\partial F(a, \eta_1, \ldots, \xi_1, \ldots)}{\partial \xi_r} d\eta_r;$$

and since this is a canonical form of $d\Omega$, it follows that when $z_1, z_2, \ldots, z_n$ are eliminated from $d\Omega$ by equating $\eta_1, \eta_2, \ldots, \eta_n$ to constants, $d\Omega$ becomes a complete differential, as proved by Mayer (*Math. Ann.*, 58, p. 247).

In this, as in the other problems that are generally treated, the original form of $d\Omega$ is a penultimate one, and the variables whose differentials occur in this original form are supposed continuous. Thus the ordinary problem of the calculus of variations may be stated in the following form, if the difficulty of the Pfaffian reduction has been overcome :—Given a penultimate form $\sum_1^{m+1} \theta_r d\xi_r$ of

$$d\Omega \equiv dw + \sum_1^m v_r du_r,$$

to make $\int d\Omega$ a minimum subject to the conditions that $\xi_1, \xi_2, \ldots, \xi_{m+1}$ are continuous between the limits and satisfy certain relations at each limit.

6. It may be remarked that the calculus of variations can be applied to discuss what seems at first a wider problem, that of the minimum of a function determined by a differential equation in which another unknown function is involved. For instance, let the differential equation be

$$F(x, y, y', z, z') = 0.$$

Suppose the values of y, z to be given when $x = 0$, and that of z when

$x = 1$, and consider the problem of determining the function z so that when $x = 1$, y shall be as small as possible. When the differential equation is

$$y' = f(x, z, z'),$$

this is the simplest problem of the calculus. Otherwise it may be attacked thus: we are to make $\int_0^1 y'dx$ a minimum with the condition $F = 0$; hence we seek to make

$$\int_0^1 \{y' + \lambda F(x, y, y', z, z')\}\, dx$$

a minimum, λ being a new unknown function: this problem also may be solved by the ordinary rules.

[On this subject see Hahn, *Math. Ann.*, Vol. 58, p. 150, and Vol. 63, p. 266, and Hilbert, *Gött. Nachr.*, 1905.]

MODULAR INVARIANTS OF A GENERAL SYSTEM OF LINEAR FORMS

By L. E. DICKSON.

[Received February 2nd, 1909.—Read February 11th, 1909.]

1. After giving an outline of a method of marked simplicity for the investigation of modular invariants, we state the main results of the present self-contained treatment of linear forms.

In the simplest case, the coefficients of the forms discussed are integers reduced modulo p, where p is a prime. In the general case, the coefficients are Galois' imaginaries $c_0+c_1\rho+\ldots+c_{n-1}\rho^{n-1}$, in which the c's are integers reduced modulo p, while ρ is a root of a congruence of degree n, irreducible modulo p. These p^n imaginaries constitute the Galois field $GF[p^n]$.

We consider the system L of q linear forms,

$$l_i = a_{i1}x_1+\ldots+a_{im}x_m \quad (i = 1, \ldots, q), \tag{1}$$

whose coefficients are arbitrary elements of the $GF[p^n]$. Let G be any given group of linear homogeneous transformations on $x_1, \ldots, x_m$ with coefficients in the field. The p^{qmn} particular systems $L', L'', \ldots$, obtained by assigning to the a's particular values, can be separated into certain classes $C_0, C_1, \ldots, C_{f-1}$ under the group G, such that two systems are transformable into each other by transformations of G if, and only if, the systems belong to the same class.

By a general theorem on interpolation, there exists one, and but one, polynomial $I(a)$ in $a_{11}, a_{12}, \ldots, a_{qm}$, with each exponent $\leqslant p^n-1$ and coefficients in the $GF[p^n]$, such that $I(a)$ takes a prescribed value v_a for each set of elements a in the field. In particular, if v_a is the same for all sets a leading to a class C, so that $I(a)$ takes prescribed values $v_0, v_1, \ldots, v_{f-1}$ for the respective classes $C_0, C_1, \ldots, C_{f-1}$, then $I(a)$ is obviously an invariant of the system of forms (1) under the group G. Thus $I(a) = \Sigma v_k I_k$, where I_k is the uniquely determined invariant which has the value unity for the class C_k and the value zero for every class C_i $(i \neq k)$; I_k is called the *characteristic* invariant for the class C_k. If $\Sigma d_k I_k = 0$, each $d_k = 0$. Although there is no linear homogeneous relation between the I's, we have $\Sigma I_k = 1$. In the former sense, we

shall say that $I_0, \ldots, I_{f-1}$ are linearly independent. Hence the total number of linearly independent invariants under G equals the number of classes under G.

When G is the total linear group on the m variables, the invariants just discussed are the *absolute* invariants of the system L. When the group is the group G_1 of all transformations of determinant unity, those invariants of G_1 which are multiplied by Δ^w under every transformation of determinant Δ are the *relative* invariants of weight w (absolute when w is a multiple of p^n-1). The number N of linearly independent invariants, relative and absolute, of the system L obviously does not exceed the number of the linearly independent invariants of G_1, the latter being the number f of the classes under G_1. As a matter of fact, $N = f$, as I have shown by a rather technical proof.* This result, however, is not presupposed in the present paper. Indeed, we here exhibit explicitly f linearly independent invariants of the general system L of linear forms. Hence $N \geqslant f$. But $N \leqslant f$, by the above simple discussion; whence $N = f$.

In the algebraic theory, q linear forms in m variables have no rational integral invariants if $q < m$, while, if $q \geqslant m$, the invariants are functions of the determinants of sets of m forms. If, for $h < m$, $l_1, \ldots, l_h$ are linearly independent, and

$$l_{h+1} = c_1 l_1 + \ldots + c_h l_h,$$

the c's are obviously invariant under linear transformation; in the modular theory (in contrast to the algebraic theory), the c's may be expressed by rational integral invariants (§ 8). In spite of the greater variety of invariants in the modular theory, we establish the following fundamental theorem: *Every invariant of a system of $q > m$ linear forms in m variables is a rational integral function of the invariants of systems of m forms in m variables.*

2. When there is a single variable, G_1 contains only the identity transformation, so that each system of forms $a_{i1}x_1$ constitutes a class. As a complete system of linearly independent invariants we may take the p^{qn} products of the powers of the a_{i1} with exponents $0, 1, \ldots, p^n-1$. Henceforth we take $m > 1$.

For a single form l_i there are two classes under G_1, one class containing only $l_i \equiv 0$, the other class containing the forms in which not every

* "General Theory of Modular Invariants," *Transactions of the American Mathematical Society*, Vol. x., April, 1909.

a_{iv} is zero and hence conjugate with x_1. For the respective classes the characteristic invariants are A_i and $1-A_i$, where

$$A_i = \prod_{v=1}^{m} (1-a_{iv}^{\mu}) \quad (\mu = p^n-1). \tag{2}$$

3. Two forms l_i, l_j may be linearly independent, or dependent with $l_i \neq 0$, &c. Hence they can be transformed within G_1 into one of the four pairs in the following table, which also gives the values of certain invariants :—

l_i	l_j	A_i	A_j	A_iA_j	V_{ij}
x_1	dx_2	0	0	0	0
x_1	cx_1	0	$1-c^{\mu}$	0	c
0	x_1	1	0	0	0
0	0	1	1	1	0

Here $d = 1$, if $m > 2$; while, for $m = 2$, d is the non-vanishing determinant D_{ij} of a pair of independent forms l_i, l_j. For the construction of an invariant V_{ij} taking the assigned values for the various classes, we may proceed as in § 8 or as follows. If, in (2), we replace a_{iv} by $a_{iv}-\kappa a_{jv}$ and apply

$$\kappa^{p^n} = \kappa, \tag{3}$$

we obtain a polynomial in κ of degree $\mu = p^n-1$; the coefficient of each power of κ is an absolute invariant of l_i, l_j. It will be seen to be convenient to separate the terms involving κ^{μ} and write

$$\prod_{v=1}^{m} [1-(a_{iv}-\kappa a_{jv})^{\mu}] \equiv A_i + A_i(A_j-1)\kappa^{\mu} - \sum_{t=1}^{\mu} S_{ijt}\kappa^t \tag{4}$$

for every root of (3). For x_1, cx_1, the non-vanishing a's are $a_{i1} = 1$, $a_{j1} = c$. Hence in (4) the factors with $v > 1$ equal unity, while the factor with $v = 1$ is $1-(1-\rho c)^{\mu}$. But

$$(\alpha-\beta)^{\mu} \equiv \sum_{t=0}^{\mu} \alpha^{\mu-t}\beta^t \pmod{p}. \tag{5}$$

Hence, for the pair x_1, cx_1, (4) becomes

$$-\sum_{t=1}^{\mu} c^t\kappa^t = -\sum_{t=1}^{\mu} S_{ijt}\kappa^t.$$

For the remaining pairs in the table, we find immediately that $S_{ijt} = 0$. Hence $V_{ij} = S_{ij1}$, $S_{ijt} = S_{ij1}$. Thus V_{ij} is the sum of the coefficients of κ, $\kappa^{\mu+1}$, $\kappa^{2\mu+1}$, ... in the expansion of the left member of (4). Applying (5), get

$$V_{ij} = \Sigma F_{1t_1} F_{2t_2} \dots F_{mt_m} \tag{6}$$

$$[t_1 + \dots + t_m \equiv 1 \pmod{\mu};\ t_1, \dots, t_m = 0, 1, \dots, \mu],$$

$$F_{vt} = -a_{iv}^{\mu-t} a_{jv}^{t} \ (t > 0), \qquad F_{v0} = 1 - a_{iv}^{\mu}. \tag{7}$$

In particular, for $m = 2$,

$$V_{ij} = (a_{i1}^{\mu} - 1) a_{i2}^{\mu-1} a_{j2} + (a_{i2}^{\mu} - 1) a_{i1}^{\mu-1} a_{j1} + \sum_{t=1}^{\mu} a_{i1}^{\mu-t} a_{j1}^{t} a_{i2}^{t-1} a_{j2}^{\mu+1-t}. \tag{6'}$$

By undetermined coefficients it follows, from the above table (or by the more instructive method of § 4), that the absolute invariants

$$1,\ A_i,\ A_j,\ A_i A_j,\ V_{ij}^{t} \quad (t = 1, \dots, \mu) \tag{8}$$

are linearly independent; also, that, for $m = 2$, the only linear relation between the invariants (8) and D_{ij}^{k} $(k = 1, \dots, \mu)$ is

$$D_{ij}^{\mu} + V_{ij}^{\mu} = (1 - A_i)(1 - A_j). \tag{9}$$

The number of classes is $p^n + 3$ if $m > 2$, $2p^n + 1$ if $m = 2$.

THEOREM.—*As a complete set of linearly independent invariants of two linear forms l_i and l_j in the $GF[p^n]$ on m variables, we may take the $p^n + 3$ absolute invariants* (8) *if $m > 2$, and, if $m = 2$, the $2p^n + 1$ invariants*

$$A_i,\ A_j,\ A_i A_j,\ V_{ij}^{t},\ D_{ij}^{t} \quad (t = 1, \dots, p^n - 1). \tag{10}$$

4. We readily derive the characteristic invariants for the various classes of two linear forms in m variables. For x_1, 0; 0, x_1; 0, 0, these are

$$A_j - A_i A_j, \quad A_i - A_i A_j, \quad A_i A_j. \tag{11}$$

For x_1, cx_1, where $c \neq 0$, the characteristic invariant is

$$-\sum_{k=1}^{\mu} c^{-k} V_{ij}. \tag{12}$$

Indeed, for $V = c$, this sum is $-\mu \equiv 1 \pmod{p}$, for $V = \gamma \neq c$; it equals a fraction with the numerator $(c^{-1}\gamma)^{\mu+1} - c^{-1}\gamma$, which vanishes in the field. For $m = 2$, the characteristic invariant of x_1, dx_2 $(d \neq 0)$ is likewise

$$-\sum_{k=1}^{\mu} d^{-k} D_{ij}^{k}. \tag{13}$$

The linear independence of invariants (10) thus follows from that of the characteristic invariants (11), (12), (13), where c and d range over the μ elements $\neq 0$ of the field. The sum of the μ functions (12) is V_{ij}^{μ}, since* the sum of the k-th powers of the elements of the field is zero for $0 < k < \mu$, and -1 for $k = \mu$. But the sum of all the characteristic invariants is 1 (§ 1). Hence relation (9) follows.

For $m > 2$, the characteristic invariant of x_1, x_2 is

$$(14) \qquad (1-A_i)(1-A_j) - V_{ij}^{\mu},$$

determined so that the sum of all shall be unity, or directly from the table of § 3. Since the linearly independent characteristic invariants (11), (12), (14) are linear functions of invariants (8), the latter are linearly independent.

5. For a given set of elements E, we shall say that

$$(15) \qquad E_{rst\ldots} \text{ precedes } E_{\rho\sigma\tau\ldots}, \qquad E_{\rho\sigma\ldots} \text{ follows } E_{rs\ldots},$$

if $r < \rho$; or, if $r = \rho$, $s < \sigma$; or, if $r = \rho$, $s = \sigma$, $t < \tau$; &c.

6. Every invariant of q binary linear forms will be shown to equal a rational integral function of A_i, V_{ij}, D_{ij} $(i, j = 1, \ldots, q)$. We employ a canonical type for each system of q forms with given coefficients in the field.

First, let not every D_{ij} vanish. Let $D_{rs} \neq 0$ $(r < s)$, but let every preceding D_{ij} $(i < j)$ vanish, viz.,

$$(16) \qquad D_{ij} = 0 \ (i < r), \qquad D_{rk} = 0 \ (r < k < s), \qquad D_{rs} \neq 0.$$

After applying an obvious transformation of G_1, we have

$$l_r = x_1, \qquad l_s = cx_2, \qquad c = D_{rs}.$$

By $D_{ir} = D_{is} = 0$ $(i < r)$, l_i is free of x_2 and x_1. By $D_{rk} = 0$, l_k is free of x_2. Hence the canonical type is

$$(17) \qquad l_i = 0, \quad l_r = x_1, \quad l_k = c_k x_1, \quad l_s = cx_2, \quad l_t = -d_t x_1 + e_t x_2,$$
$$(i < r < k < s < t \leqslant q; \ c \neq 0).$$

Next, let every $D_{ij} = 0$, but not every l_i, vanish identically. Let l_f be the first non-vanishing l. Applying a transformation of G_1, we get

$$(18) \qquad l_i = 0, \qquad l_f = x_1, \qquad l_j = m_j x_1 \quad (i < f < j \leqslant q).$$

* Dickson, *Linear Groups*, Leipzig, 1901, p. 54.

Finally, there remains the system

$$l_i = 0 \quad (i = 1, \ldots, q). \tag{19}$$

A system of forms (17) defines a class A_{rs}^{cde}; a system (18) defines a class B_f^m; the system (19) the class C_0. In addition to the definition in § 5, we shall say that any class A precedes a class B or C_0, and that any B precedes C_0. No two classes are equivalent under G_1. As to the A's, this follows from the invariance of the D_{ij}; for (17), we have relations (16) and

$$D_{rs} = c, \quad D_{rt} = e_t, \quad D_{ks} = cc_k, \quad D_{st} = cd_t \quad (r < k < s < t), \tag{20}$$

so that the c, d, e may be expressed in terms of invariants. For (18),

$$V_{fj} = mj \quad (f < j \leqslant q), \tag{21}$$

where V is the invariant of § 3. Since the c_k, d_t, e_t may take any values in the field and c any values $\neq 0$, it follows from (20) that the products

$$\prod_{k=r+1, \ldots, s-1;\ t=s+1, \ldots, q} D_{rs}^{\gamma} D_{ks}^{\gamma_k} D_{rt}^{\epsilon_t} D_{st}^{\delta_t} \quad (\gamma = 1, \ldots, \mu;\ \gamma_k, \epsilon_t, \delta_t = 0, 1, \ldots, \mu) \tag{22}$$

are linearly independent in the field, and that the number of these invariants (22) is the number of classes A_{rs}^{cde}. In view of the factor D_{rs}, (22) vanishes for the classes B, C_0, and those classes $A_{\rho\sigma}$ which follow the A_{rs}. Similarly,

$$1 - A_f, \quad \prod_{j=f+1}^{q} V_{fj}^{\mu_j} \quad (\mu_j = 0, 1, \ldots, \mu;\ \text{not every } \mu_j = 0) \tag{23}$$

are linearly independent, of the same number as the classes B_f^m, and vanish for the classes C_0, B_ϕ $(\phi > f)$ which follow the B_f. Finally, with the class C_0 we associate the invariant 1. We deduce at once the linear independence of the specified invariants whose number equals that of the classes.

THEOREM—*Every invariant of q binary linear forms is expressible in terms of invariants of pairs of forms. A complete set of the*

$$(p^{nq}-1)(p^{n(q-1)}-1)/(p^{2n}-1)+(p^{nq}-1)/(p^n-1)+1$$

linearly independent invariants of q binary linear forms in the $GF[p^n]$ is given by unity, (22) and (23) for $r, s, f = 1, \ldots, q$; $r < s$.*

7. For $q = 3$, the $p^{3n}+p^{2n}+p^n+1$ linearly independent variants are

$$D_{12}^{\alpha} D_{13}^{\beta} D_{23}^{\gamma} \ (\alpha, \beta, \gamma = 0, 1, \ldots, \mu), \qquad A_1, \ A_2, \ A_3,$$
$$V_{12}^{\rho}, \ V_{13}^{\rho}, \ V_{23}^{\rho}, \ V_{12}^{\rho} V_{13}^{\sigma} \quad (\rho, \sigma = 1, \ldots, \mu).$$

* We may introduce $A_1 A_2$ instead of 1 by (9). Then, if $q = 2$, the set becomes (10).

Other products can be expressed in terms of these by (9) and

$$A_1 D_{12} = 0, \qquad A_1 D_{23} = (D_{12}^{\mu}-1)(D_{13}^{\mu}-1)D_{23},$$

$$A_1 V_{12} = 0, \qquad A_1 V_{23}^{t} = (D_{23}^{\mu}-1) D_{12}^{2\mu-t} D_{13}^{t} - V_{12}^{2\mu-t} V_{13}^{t} + V_{23}^{t},$$

$$D_{12} V_{12} = 0, \qquad D_{12}^{\lambda} V_{13}^{t} = (-1)^{\lambda} D_{12}^{\mu+\lambda-t} D_{23}^{t} (1-D_{13}^{\mu}),$$

$$V_{ij}^{t} V_{jk}^{e} = V_{ij}^{\mu+t-e} V_{ik}^{e}, \qquad V_{ik}^{t} V_{jk}^{e} = V_{ij}^{2\mu-e} V_{ik}^{t+e},$$

$$(1-A_1)(1-A_2)(1-A_3) = V_{12}^{\mu} V_{13}^{\mu} + D_{12}^{\mu} D_{13}^{\mu} + D_{12}^{\mu} D_{23}^{\mu} + D_{13}^{\mu} D_{23}^{\mu} - 2 D_{12}^{\mu} D_{13}^{\mu} D_{23}^{\mu}.$$

For $q = 4$, we use also $D_{12}D_{34} - D_{13}D_{24} + D_{14}D_{23} = 0$ and its products by

$$D_{12}^{\mu}, \quad 1-D_{12}^{\mu}, \quad (1-D_{12}^{\mu})(1-D_{13}^{\mu}).$$

8. We employ a general function-theoretic process to construct an invariant* $V = V_{i_1, \ldots, i_{h+1}}$ of $h+1$ (not necessarily linear forms $l_{i_1}, \ldots, l_{i_{h+1}}$) in m' variables ($m' > h$), such that V shall have the value c_1 when $l_{i_1}, \ldots, l_{i_h}$ are linearly independent, but $l_{i_1}, \ldots, l_{i_{h+1}}$ dependent and

$$l_{i_{h+1}} = c_1 l_{i_1} + \ldots + c_h l_{i_h}, \tag{24}$$

while V shall have the value zero for all systems of $h+1$ forms not having the preceding two properties. Let $a_{11}, \ldots, a_{1m}$ be the coefficients of l_1 in any order; $a_{i1}, \ldots, a_{im}$ the corresponding coefficients of l_i. Since V shall vanish if the $h+1$ forms are linearly independent, we may set

$$V = v \Pi (1-M^{\mu}) \quad (\mu = p^n - 1), \tag{25}$$

M ranging over the determinants of order $h+1$ in the matrix of the l's. It suffices to consider henceforth only sets of coefficients for which every $M = 0$; for such a set $V = v$. Of these sets, consider one for which

$$D = |a_{ij}| \quad (i = i_1, \ldots, i_h; \; j = j_1, \ldots, j_h) \tag{26}$$

is not zero, $j_1, \ldots, j_h$ being distinct integers $\leqslant m$. Thus there holds a relation of type (24), so that

$$a_{i_{h+1} v} = \sum_{s=1}^{h} c_s a_{i_s v} \quad (v = 1, \ldots, m).$$

Taking $v = j_1, \ldots, j_h$, we have h equations in which the determinant of the coefficients of $c_1, \ldots, c_h$ equals (26) with rows and columns interchanged. Let d denote the determinant derived from (26) by replacing (in the first row) each $a_{i_1 j}$ by $a_{i_{h+1} j}$. Then $Dc_1 = d$. Thus $c_1 = dD^{\mu-1}$.

Let $D_1, \ldots, D_r$ denote the determinants (26), taken in any sequence, which are defined by the $r = \binom{m}{h}$ combinations $j_1, \ldots, j_h$ of h integers

* The order of the intermediate subscripts $i_2, \ldots, i_h$ is immaterial.

$\leqslant m$. Let $d_1, \ldots, d_r$ denote the corresponding determinants d in the same sequence. We have

$$v = d_k D_k^{\mu-1} \quad (\text{when } D_k \neq 0).$$

From $v = d_1 D_1^{\mu-1}$, when $D_1 \neq 0$, we get

$$v \equiv d_1 D_1^{\mu-1} + \lambda_1 (1 - D_1^{\mu}).$$

To determine λ_1, we consider a set making $D_1 = 0$, $D_2 \neq 0$. For such a set

$$d_2 D_2^{\mu-1} = v = \lambda_1,$$

so that for every set with $D_1 = 0$

$$\lambda_1 = d_2 D_2^{\mu-1} + \lambda_2 (1 - D_2^{\mu}).$$

The product of the two members by $1 - D_1^{\mu}$ are equal for every D_1. Thus

$$v \equiv d_1 D_1^{\mu-1} + (1 - D_1^{\mu})\, d_2 D_2^{\mu-1} + \lambda_2 (1 - D_1^{\mu})(1 - D_2^{\mu})$$

for all sets. Proceeding similarly, we find by induction that

$$(27) \quad v = d_1 D_1^{\mu-1} + (1 - D_1^{\mu})\, d_2 D_2^{\mu-1} + (1 - D_1^{\mu})(1 - D_2^{\mu})\, d_3 D_3^{\mu-1} + \ldots + (1 - D_1^{\mu}) \ldots (1 - D_{r-1}^{\mu})\, d_r D_r^{\mu-1}$$

with initially the additional term

$$\lambda_r (1 - D_1^{\mu}) \ldots (1 - D_r^{\mu}).$$

But for a set for which $D_1, \ldots, D_r$ all vanish, (27) becomes $v = \lambda_r$, while by hypothesis $V = 0$, so that, by (25), $v = 0$. The invariance of V, given by (25) and (27), follows from the fact that it takes the same value for any two systems of $h+1$ forms equivalent under the total group.

For $h = 1$ we set $i_1 = i$, $i_2 = j$, and obtain

$$V_{ij} = \{a_{j1} a_{i1}^{\mu-1} + (1 - a_{i1}^{\mu})\, a_{j2} a_{i2}^{\mu-1} + \ldots + (1 - a_{i1}^{\mu}) \ldots (1 - a_{im-1}^{\mu})\, a_{jm} a_{im}^{\mu-1}\} \Pi (1 - M^{\mu}),$$

where M ranges over the determinants $a_{ir} a_{js} - a_{is} a_{jr}$ $(r, s = 1, \ldots, m)$.

9. We proceed to exhibit a complete set of linearly independent invariants of the system of $q \geqslant m$ linear forms l_i on m variables with arbitrary coefficients in the $GF[p^n]$. We shall employ a canonical type for each system with given coefficients.

First, let m of the forms be linearly independent. Let $l_{r_1}, \ldots, l_{r_m}$ $(r_1 < r_2 \ldots < r_m)$ be independent, but every preceding (§ 5) set of m forms dependent. Applying a transformation of G_1, we have

$$(28_a) \qquad l_r = x_k \quad (k < m), \qquad l_{r_m} = c x_m \quad (c \neq 0).$$

For $i_1 < r_1$, l_{i_1} and any $m-1$ of the forms $l_{r_1}, \ldots, l_{r_m}$ are dependent by hypothesis; whence $l_{i_1} = 0$. For $r_1 < i_2 < r_2$, l_{r_1}, l_{i_2} and any $m-2$ of the forms $l_{r_2}, \ldots, l_{r_m}$ are dependent; whence l_{i_2} is a multiple of x_1. Proceeding similarly, we get

$$(28_b) \qquad l_{i_1} = 0, \qquad l_{i_t} = \sum_{j=1}^{t-1} b_{i_t j} x_j \quad (t = 2, \ldots, m+1),$$

$$(i_1 < r_1 < i_2 < r_2 < i_3 \ldots < r_{m-1} < i_m < r_m < i_{m+1} \leqslant q).$$

Conversely, the q forms (28_a) and (28_b) obviously have the properties that $l_{r_1}, \ldots, l_{r_m}$ are independent, while every preceding set of m forms give dependent forms. We employ the determinants of order m:

$$(29) \qquad D_{r_1 \ldots r_m} = c, \quad D_{r_1 \ldots r_{j-1} i_t r_{j+1} \ldots r_m} = \left\{ \begin{matrix} c b_{i_t j} & (j < m) \\ b_{i_t j} & (j = m) \end{matrix} \right\}$$

$$(t = 2, \ldots, m+1\,;\ j < t).$$

The parameters c, b are uniquely determined by these determinants, which are invariant. Hence no two of the classes* $A^{bc}_{r_1 \ldots r_m}$ defined by (28) are equivalent under the group G_1. For given values of the r's, the number of these classes equals the number of products

$$(30) \qquad \Pi\, D^{\gamma}_{r_1 \ldots r_m} D^{\beta_{i_t j}}_{r_1 \ldots r_{j-1} i_t r_{j+1} \ldots r_m},$$

where a particular product is obtained by taking all sets

$$t = 2, \ldots, m+1\,;\ j = 1, \ldots, t-1,$$

and then allowing $i_2, \ldots, i_{m+1}$ to range over all sets of integers $1, \ldots, q$ satisfying the inequalities (28_b); while the various products are obtained by taking

$$\gamma = 1, \ldots, \mu\,;\ \beta_{i_t j} = 0, 1, \ldots, \mu \quad (\mu = p^n - 1).$$

Since the b's are arbitrary in the field, while c has any value $\neq 0$, it follows from (29) that the various products (30) are linearly independent in the field. Allowing the r's to vary, we obtain as many linearly independent invariants (30) as there are classes $A^{bc}_{r_1 \ldots r_m}$. Indeed, in view of the first factor, the product (30) vanishes for any class $A^{b'c'}_{r'_1 \ldots r'_m}$ which follows $A^{bc}_{r_1 \ldots r_m}$.

Next, for $h < m$, let h of the q forms be linearly independent, but every set of $h+1$ of the forms be dependent. Let

$$l_{r_1}, \ldots, l_{r_h} \quad (r_1 < r_2 \ldots < r_h)$$

be independent, but every preceding set of h forms dependent. Apply-

* We employ b to denote the ordered aggregate of the coefficients in (28_b).

ing a transformation of G_1, we have $l_{r_1} = x_1, \ldots, l_{r_h} = x_h$. We derive (28_b), with m replaced by h. For the invariants determined in § 8, we have

$$V_{r_j r_1 \ldots r_{j-1} r_{j+1} \ldots r_h i_t} = b_{i_t j} \quad (t = 2, \ldots, h+1;\ j < t). \tag{31}$$

Hence no two of the present classes $B^b_{r_1 \ldots r_h}$ are equivalent under G_1. Each invariant (31) vanishes for every subsequent class $B^{b'}_{r'_1 \ldots r'_{h'}}$ $(h' \leqslant h)$ and for the class C_0 composed of the system (19). For given r's, consider the products

$$\Pi V^{\beta_{i_t j}}_{r_j r_1 \ldots r_{j-1} r_{j+1} \ldots r_h i_t} \quad \text{(exponents not all zero)}, \tag{32}$$

a particular product being obtained by taking all sets $t = 2, \ldots, h+1$; $j = 1, \ldots, t-1$ and allowing $i_2, \ldots, i_{h+1}$ to range over all sets of h of the integers $1, \ldots, q$ for which

$$r_1 < i_2 < r_2 < i_3 < \ldots < r_h < i_{h+1};$$

while the various products are obtained by taking each $\beta = 0, 1, \ldots, \mu$, but not all zero. In place of unity, excluded in (32), we desire an invariant E which has the value 1 for each class $B^b_{r_1 \ldots r_h}$ and the value 0 for the subsequent classes. Thus E may be taken to be that invariant of the forms $l_{r_1}, \ldots, l_{r_h}$ alone which is characteristic for the class containing $x_1, \ldots, x_h$. Hence

$$E_{r_1 \ldots r_h} = 1 - \Pi(1 - D^\mu), \tag{33}$$

where D ranges over the determinants of order h in the matrix of the hm coefficients of the h forms on $m > h$ variables. Indeed, $E = 1$ if any $D \neq 0$, $E = 0$ if every $D = 0$. Since the invariants (32) and (33) vanish for all classes following $B^b_{r_1 \ldots r_h}$, they are linearly independent. Varying h and the r's we obtain as many linearly independent invariants (32) and (33) as there are classes B. With the class C_0 of vanishing forms we associate the invariant* 1.

Since we have exhibited as many linearly independent invariants as there are classes under the group G_1, we have proved the

THEOREM.—*For $q > m$, every invariant of q linear forms in the $GF[p^n]$ on m variables is a rational integral function of the invariants of m forms on m variables. A complete set of linearly independent invariants of $q \geqslant m$ forms is given by* (30), (32), (33) *and unity, each being a polynomial in the determinants of orders $\leqslant m$ of the matrix of the coefficients of the forms.*

* We may take any invariant, as (35), which does not vanish for C_0.

10. For $q < m$, the first case of § 9 does not occur. If the q forms are linearly independent, they may be transformed into $x_1, \ldots, x_q$. For the resulting class $B^0_{1\ldots q}$ the characteristic invariant $E_{1\ldots q}$ is given by (33) for $h = q$. If, for $h < q$, h of the forms are linearly independent, but every set of $h+1$ dependent, we proceed as in § 9.

THEOREM.—*For $q < m$, a complete set of linearly independent invariants of q linear forms on m variables is given by* (32) *for $h < q$,* (33) *for $h \leqslant q$, and unity.*

11. Instead of introducing the new invariants E, we may make use of products of the invariants A_i of single forms (§ 2). In place of (33), we use

$$J_{r_1\ldots r_h} = \Pi A_i \quad (i = 1, \ldots, q\,;\ i \neq r_1, \ldots, i \neq r_h). \tag{34}$$

For the class C_0 the characteristic invariant is

$$A_1 A_2 \ldots A_q. \tag{35}$$

For $q \geqslant m$, there are as many invariants (30), (32), (34), (35) as classes under G_1. Suppose there is a linear (homogeneous) relation between these invariants. For the class $B^0_{r_1\ldots r_h}$, the D's and V's vanish, while

$$A_{r_1} = 0, \ \ldots, \ A_{r_h} = 0, \ A_i = 1 \quad (i \neq r_1, \ \ldots, \ i \neq r_h).$$

Taking $h = m-1$, we see that the only non-vanishing invariant of the set (34), (35) is $J_{r_1\ldots r_{m-1}}$, whose coefficient in the relation therefore vanishes. We take in turn the various sets of $m-1$ subscripts r. Proceeding similarly with $h = m-2, \ \ldots, \ h = 1$, we conclude that no invariant (34) occurs in the relations. Taking every $l_i = 0$, we see that the coefficient of $A_1 \ldots A_q$ vanishes. The relation now involves only the D's and V's; but these were shown in § 9 to be linearly independent.

For $q < m$, we replace $E_{1\ldots q}$ of § 10 by unity, which takes the place of (34) for $h = q$. For the independence proof we employ in succession the classes $B^0_{r_1\ldots r_h}$ for $h = q, q-1, \ldots, 1$ and C_0. The case $h = q$ shows that the relation lacks the invariant unity.

THEOREM.—*A complete set of linearly independent invariants of q linear forms on m variables is given by* (30), (32), (34), (35) *if $q \geqslant m$; and by* (32), (34), (35) *and unity if $q < m$, viz., by* (32) *and the 2^q products $A_1^{\alpha_1} \ldots A_q^{\alpha_q}$ (each $\alpha = 0$ or 1).*

12. It now follows that the invariant E of h forms on m variables, $m > h$, is expressible in terms of the A's and V's. Since E is the

characteristic invariant for the class containing $x_1, \ldots, x_h$, formula (14) gives

$$E_{ij} = (1-A_i)(1-A_j) - V_{ij}^{\mu}, \tag{36}$$

while, by § 2, $E_i = 1-A_i$. A comparison of (36) with (9) reveals a fact which is true for any h. If, in the expression for $E_{r_1 \ldots r_h}$ in terms of the invariants A and V of h forms on $m > h$ variables, we replace E by $D^{\mu}_{r_1 \ldots r_h}$, we obtain a true relation between the invariants of h forms on h variables, where D is the determinant of the latter forms. The converse is true if we employ the non-homogeneous linear relation $D^{\mu} + \ldots = 1$ which hold between the invariants of § 11 for h forms in h variables. Such a relation exists, since the sum of the characteristic invariants is unity (§ 1) and since the sum of those for the classes $x_1, \ldots, x_{h-1}, dx_h$ (d taking all values $\neq 0$) is D^{μ} (§ 4). This relation not not only gives at once the desired expression for E, but is of considerable importance in the general theory. We shall derive it by certain devices for $h = 3$ and $h = 4$.

13. For three forms in $m \geqslant 3$ variables, we have

			V_{123}	V_{213}	V_{132}	V_{12}	V_{13}	V_{23}	A_1	A_2	A_3
x_1	x_2	bx_3	0	0	0	0	0	0	0	0	0
x_1	x_2	cx_1+dx_2	c	d	$-cd^{\mu-1}$	0	$c(1-d^{\mu})$	$d(1-c^{\mu})$	0	0	$(1-c^{\mu})(1-d^{\mu})$
x_1	ex_1	x_2	0	0	e	e	0	0	0	$1-e^{\mu}$	0
0	x_1	x_2	0	0	0	0	0	0	1	0	0
x_1	fx_1	gx_1	0	0	0	f	g	$gf^{\mu-1}$	0	$1-f^{\mu}$	$1-g^{\mu}$
0	x_1	hx_1	0	0	0	0	0	h	1	0	$1-h^{\mu}$
0	0	x_1	0	0	0	0	0	0	1	1	0
0	0	0	0	0	0	0	0	0	1	1	1

In the first type, $b = 1$ if $m > 3$; while, if $m = 3$, b may have any value $\neq 0$. The remaining parameters $c, \ldots, h$ are arbitrary in the field. By § 11 a complete set of linearly independent invariants is given, for $m > 3$, by $A_1^{a_1} A_2^{a_2} A_3^{a_3}$ (each $a = 0$ or 1), the powers of V_{132} and V_{23}, the products of the powers of V_{123} and V_{213}, and those for V_{12} and V_{13}, the exponents being $\leqslant \mu$. For $m = 3$, unity is to be deleted and the powers of the determinant $D = D_{123}$ inserted.

Invariant E_{12}, defined by (36), equals 1 for the first two types and 0 for the other types. Hence $A_3 E_{12}$ is the characteristic invariant for

the class $x_1, x_2, 0$. To obtain its expression as a linear function of the above invariants, we need $A_3 V_{12}^{\mu}$. Now

$$V_{132}^{\mu} - V_{123}^{\mu} V_{213}^{\mu} = V_{12}^{\mu}(1 - A_3 - V_{13}^{\mu}), \tag{37}$$

since each member vanishes except for the third type and equals e^{μ} for the latter. Hence

$$A_3 E_{12} = A_3(1-A_1)(1-A_2) + V_{132}^{\mu} - V_{123}^{\mu} V_{213}^{\mu} - V_{12}^{\mu} + V_{12}^{\mu} V_{13}^{\mu}. \tag{38}$$

For $m = 3$, $E_{12} - D^{\mu}$ equals 1 for the second type, 0 for the other types. Hence the characteristic invariant for $x_1, x_2, 0$ is given by

$$E_{12} - D^{\mu} + (1 - V_{123}^{\mu})(1 - V_{213}^{\mu}) - 1. \tag{39}$$

Inserting the value (36) of E_{12} and equating the result to (38), we obtain the desired non-homogeneous linear relation between our invariants for $m = 3$:

$$D^{\mu} = 2V_{123}^{\mu} V_{213}^{\mu} - V_{123}^{\mu} - V_{213}^{\mu} - V_{132}^{\mu} - V_{12}^{\mu} V_{13}^{\mu} + (1-A_1)(1-A_2)(1-A_3). \tag{40}$$

The right member is thus the expression for the invariant E_{123} of three forms in m variables for $m > 3$.

We note in passing that it is not difficult to exhibit the characteristic invariant $I_{c,d}$ of the general class $A_{c,d}$ of the second type. As in § 4, we employ

$$\kappa_c = -\sum_{k=1}^{\mu} c^{-k} V_{123}^{k}, \qquad \lambda_d = -\sum_{k=1}^{\mu} d^{-k} V_{213}^{k}. \tag{41}$$

If $c \neq 0$, $\kappa_c = 1$ for $A_{c,d}$, 0 for $A_{\gamma,\delta}$, for every d, γ, δ, $\gamma \neq c$. If $d \neq 0$, $\lambda_d = 1$ for $A_{c,d}$, 0 for $A_{\gamma,\delta}$, for every c, γ, δ, $\delta \neq d$. Hence

$$I_{c,d} = \kappa_c \lambda_d \quad (cd \neq 0), \qquad I_{c,0} = \kappa_c(1 - V_{213}^{\mu}) \quad (c \neq 0), \tag{42}$$

$$I_{0,d} = \lambda_d(1 - V_{123}^{\mu}) \quad (d \neq 0), \quad I_{0,0} \text{ in (38) or (39)}.$$

As a check, the sum of these p^{2n} characteristic invariants was verified to be $E_{12} - D^{\mu}$ by means of $\Sigma c^{-k} d^{-t} = (\Sigma c^{-k})(\Sigma d^{-t}) = 1$ if $\kappa = t = \mu$, otherwise $= 0$, where the sums range over all elements $c \neq 0$, $d \neq 0$.

14. For 4 forms in 4 variables, we obtain two determinations of the characteristic invariant I for the class $x_1, x_2, x_3, 0$. As in (39),

$$I = E_{123} - D^{\mu} + (1 - V_{1234}^{\mu})(1 - V_{2134}^{\mu})(1 - V_{3124}^{\mu}) - 1, \tag{43}$$

where E_{123} is the right member of (40). Again, $I = A_4 E_{123}$. As in (37),

$$V_{1243}^{\mu} - V_{1234}^{\mu} V_{3124}^{\mu} = V_{123}^{\mu}(1 - A_4 - V_{124}^{\mu} - V_{214}^{\mu} + V_{124}^{\mu} V_{214}^{\mu}). \tag{44}$$

Hence $A_4 V_{123}^{\mu}$ is expressed linearly in terms of our system of invariants (§ 11). Interchanging subscripts 1, 2 or 2, 3, we get $A_4 V_{213}^{\mu}$, $A_4 V_{132}^{\mu}$.

Multiplying (44) by V^{μ}_{213} and applying

$$V_{213}V_{3124}=0, \qquad V^{\mu}_{213}V^{\mu}_{1243}=V^{\mu}_{1243}V^{\mu}_{2143}-V^{\mu}_{1234}V^{\mu}_{2134}V^{\mu}_{3124},$$

we obtain $A_4V^{\mu}_{123}V^{\mu}_{213}$ linearly in terms of the system. It remains to find $A_4V^{\mu}_{12}V^{\mu}_{13}$. Interchanging 3 and 4 in (37), we have

$$A_4V^{\mu}_{12}=V^{\mu}_{12}-V^{\mu}_{12}V^{\mu}_{14}+W, \qquad W\equiv V^{\mu}_{124}V^{\mu}_{214}-V^{\mu}_{142}.$$

To find $V^{\mu}_{13}W$, we note that $V^{\mu}_{13}W+V^{\mu}_{142}V^{\mu}_{143}$ vanishes for every class except that containing x_1, x_2, ax_1+bx_2, cx_1+dx_2; and for it has the value $c^{\mu}d^{\mu}\Delta^{\mu}$, where $\Delta=bc-ad$. But

$$P=V_{213}V_{124}-V_{123}V_{214}$$

vanishes except for the same class, and for it has the value Δ. Thus

$$V^{\mu}_{13}W=P^{\mu}V^{\mu}_{124}V^{\mu}_{214}-V^{\mu}_{142}V^{\mu}_{143}.$$

To P^{μ} we apply (5). By additions we obtain A_4E_{123} expressed linearly in the system. Comparing the result with (43), we obtain

$$\begin{aligned}(45)\quad D^{\mu}=&(1-A_1)(1-A_2)(1-A_3)(1-A_4)-3V^{\mu}_{1234}V^{\mu}_{2134}V^{\mu}_{3124}\\
&+2(V^{\mu}_{1234}V^{\mu}_{2184}+V^{\mu}_{1234}V^{\mu}_{3124}+V^{\mu}_{2134}V^{\mu}_{3124})+2V^{\mu}_{1243}V^{\mu}_{2143}-V^{\mu}_{1243}\\
&-V^{\mu}_{2143}-V^{\mu}_{1284}-V^{\mu}_{2184}-V^{\mu}_{3124}-V^{\mu}_{1342}-2V^{\mu}_{123}V^{\mu}_{213}V^{\mu}_{124}V^{\mu}_{214}\\
&-V^{\mu}_{12}V^{\mu}_{13}V^{\mu}_{14}-(V^{\mu}_{123}V^{\mu}_{124}+V^{\mu}_{123}V^{\mu}_{214}+V^{\mu}_{213}V^{\mu}_{124}+V^{\mu}_{213}V^{\mu}_{214})\\
&-(V^{\mu}_{132}V^{\mu}_{134}+V^{\mu}_{132}V^{\mu}_{314})-V^{\mu}_{142}V^{\mu}_{143}+V^{\mu}_{132}V^{\mu}_{134}V^{\mu}_{314}\\
&+2V^{\mu}_{123}V^{\mu}_{213}(V^{\mu}_{124}+V^{\mu}_{214})+2V^{\mu}_{124}V^{\mu}_{214}(V^{\mu}_{123}+V^{\mu}_{213})\\
&+\sum_{r=1}^{\mu}(V_{123}V_{214})^r(V_{213}V_{124})^{\mu-r},\end{aligned}$$

the terms in any parenthesis being related under the classification in § 9. The second member of (45) defines E_{1234} for $m>4$ variables.

15. In addition to the general method in § 8 of constructing the invariants V, a second method was employed in § 3 for the case of two forms. As the latter method, apart from details, is that commonly used in the algebraic theory, it will prove interesting to give the results obtained similarly for three forms. In (2) we replace a_{iv} by $a_{iv}-\kappa a_{jv}-\lambda a_{kv}$ and, in view of (3), express the result in the form

$$\Pi=A_i[1+(A_j-1)\kappa^{\mu}][1+(A_k-1)\lambda^{\mu}]-\sum_{t=1}^{\mu}V^{t}_{ij}\kappa^{t}-\sum_{t=1}^{\mu}V^{t}_{ik}\lambda^{t}+\sum_{r,s=1}^{\mu}T_{rs}\kappa^{r}\lambda^{s},$$

which, for $\lambda=0$, reduces to (4). We obtain the value of T_{rs} for each canonical set of the three forms (§ 13). Most of the cases may be treated

by inspection. But for the second type

$$\Pi = [1-(1-c\lambda)^\mu][1-(-\kappa-d\lambda)^\mu]$$
$$\equiv \Big[\sum_{t=1}^{\mu} c^t\lambda^t\Big]\Big[d^\mu\lambda^\mu - 1 + \sum_{r=1}^{\mu}(-1)^r\kappa^r(d\lambda)^{\mu-r}\Big] \pmod p,$$

by (5). For the fourth type

$$\Pi = 1-(1-f\kappa-g\lambda)^\mu \equiv -\sum_{l=1}^{\mu}(f\kappa+g\lambda)^l$$
$$= -\Sigma\binom{r+s}{r} f^r g^s \kappa^r\lambda^s \quad (r, s = 0, 1, \ldots, \mu;\ r+s = 1, \ldots, \mu).$$

We find that $T_{rs} = 0$ for types 1, 4, 7, 8; $(-1)^r c^{r+s} d^{\mu-r}$ for 2; e^r $(s = \mu)$, 0 $(s < \mu)$ for type 3; $-\binom{r+s}{r} f^r g^s$ $(r+s \leqslant \mu)$, 0 $(r+s > \mu)$ for 5; $(-1)^{s-1} h^s$ $(r+s = \mu$ or $r = s = \mu)$, otherwise 0 for type 6. Hence $T_{\mu 1} = V_{ijk}$, $T_{1\mu} = V_{ikj}$. Permuting the forms l_i and l_j, we see that the new function $T_{\mu 1}$ is V_{jik}. Conversely, each T_{rs} may easily be expressed in terms of the V's and A's. As a complete set of linearly independent invariants we may take

$$T_{rs},\ V^r_{ij},\ V^r_{ik},\ V^r_{jk},\ V^r_{ij}V^s_{ik},\ A_iV^r_{jk},\ A_jV^r_{ik},\ A_kV^r_{ij},\ A^{\alpha_i}_i A^{\alpha_j}_j A^{\alpha_k}_k \tag{46}$$
$$(r, s = 1, \ldots, \mu;\ \alpha\text{'s} = 0, 1),$$

if $m > 3$; the same with unity deleted and D^r inserted, if $m = 3$. The only non-homogeneous linear relation between the invariants for $m = 3$ is

$$D^\mu + T_{\mu\mu} + V^\mu_{jk} = (1-A_i)(1-A_j)(1-A_k). \tag{47}$$

ON AN INTEGRAL EQUATION

By G. H. HARDY.

[Received February 20th, 1909.—Read March 11th, 1909.]

I.

Introductory.

1. In one of his papers on integral equations,* Mr. H. Bateman has stated and made use of the equation

$$f(x) = \frac{1}{\pi}\int_{-\infty}^{\infty} \frac{\sin(t-x)}{t-x} f(t)\,dt, \tag{1}$$

a formula which is striking in itself and capable of interesting applications to various questions in the general theory of the representation of arbitrary functions by means of definite integrals and infinite series. The formula, as Mr. Bateman points out, "is evidently not satisfied by a perfectly arbitrary function," and it is desirable to "find a convenient description of a class of functions to which it is applicable." But so far as I am aware, neither Mr. Bateman himself nor any other writer has attempted to apply accurate methods to the determination of any such class of functions.†

---

* *Proc. London Math. Soc.*, 2nd Series, Vol. 4, pp. 483 *et seq.*

† Mr. Bateman observes that

$$\int_{-\infty}^{\infty} \frac{\sin(t-x)}{t-x} f(t)\,dt = \tfrac{1}{2}\int_{-\infty}^{\infty} f(t)\,dt \int_{-1}^{1} e^{i\mu(x-t)}\,d\mu\,;$$

and that therefore, if the function $f(x)$ satisfies the equation (1), and if we write

$$\psi(\mu) = \frac{1}{2\pi}\int_{-\infty}^{\infty} e^{-i\mu t} f(t)\,dt, \tag{α}$$

we shall have (assuming the convergence of all the integrals concerned, and the legitimacy of the inversion of the order of integration)

$$f(x) = \int_{-1}^{1} e^{ix\mu}\psi(\mu)\,d\mu. \tag{β}$$

But this, although a very interesting transformation, affords at most the lines of a proof that a function satisfying (1) possesses the inversion property expressed by (α) and (β), and not a proof that a function of the form given by (β) necessarily satisfies (1).

2. In the present communication I propose to discuss, *ab initio* and by rigorous methods, a slightly generalised form of the equation (1), viz.,

$$f(x) = \frac{1}{\pi}\int_{-\infty}^{\infty} \frac{\sin m(t-x)}{t-x} f(t)\,dt, \tag{2}$$

where x, $f(x)$, and m are real and m positive. A function which satisfies this equation I shall call *an m-function.* I shall show how to define extensive classes of m-functions, using first a direct method depending on the evaluation of certain definite integrals, and second the method of contour integration, which is less direct and general, but, at any rate in the most simple cases, more obvious in its application. I shall show that, if a function is an m-function for $m = m_0$, it is (subject to certain conditions) an m-function for $m \geqslant m_0$; and I shall discuss more cursorily some other interesting properties which such functions possess.

II.

Some general considerations relating to the equation (2).

3. Before I proceed to any accurate discussion of the equation (2), I wish to point out certain formal relations in which it stands to various questions of analysis.

(i.) Fourier's "double integral theorem" may be expressed by the equation

$$f(x) = \lim_{m\to\infty} \frac{1}{\pi}\int_{-\infty}^{\infty} \frac{\sin m(t-x)}{t-x} f(t)\,dt. \tag{3}$$

This equation is satisfied by what, from the point of view of the theory of functions of real variables, may reasonably be called a "perfectly arbitrary" function: that is to say, by *a function subject only to conditions of inequality depending only on the values of $f(x)$ for real values of x.* It is certainly satisfied, for example, if $f(t)$ is a function whose total fluctuation in any finite interval is limited, and if

$$\int_{-\infty}^{\infty} f(t)\,dt$$

is convergent.*

Now, if $f(x)$ is an m-function for $m = m_0$, and if we assume the result mentioned above, that it is then (subject to certain conditions, purely of

* Hobson, *Theory of Functions of a Real Variable*, pp. 758 *et seq.*; Carslaw, *Fourier's Series and Integrals*, pp. 178 *et seq.*; Bromwich, *Infinite Series*, pp. 471, 472.

inequality) an m-function for $m \geqslant m_0$, we see that the equation (2) is then satisfied by *all values of m from m_0 onwards, and not merely in the limit* as expressed by (3) Thus, as we shall see, $\cos \mu x$ ($\mu > 0$) is an m-function for $m > \mu$, though not for $m = \mu$; and $(\sin \mu x)/x$ is an m-function for $m \geqslant \mu$, whereas $e^{-|x|}$, e^{-x^2} are not m-functions for any value of m, though they of course satisfy (3).

But, as we shall see, m-functions cannot be defined purely by "conditions of inequality," but only by *conditions of functional form*, such as, *e.g.*, that $f(x)$ is defined by a definite integral of a particular type, or that $f(x)$ is an integral function subject to inequalities involving complex values of x.

(ii.) If $f(x)$ is an m-function, we can at once obtain a formal expansion of $f(x)$ in a series of the type

$$\Sigma \frac{a_n}{n!} \left(\frac{d}{dx}\right)^n \frac{\sin mx}{x},$$

where

$$a_n = \frac{1}{\pi} \int_{-\infty}^{\infty} (-t)^n f(t)\, dt.$$

The integrals which define the coefficients may be convergent or "summable," and so may the series; in any case the expansion is at present a purely formal one. I mention it because such expansions are of interest on account of their connection with expansions of the form

$$\Sigma b_n J_{n+\frac{1}{2}}(mx);$$

the relation between the two types of series is indeed, in virtue of Lord Rayleigh's formula

$$\sqrt{\left(\frac{\pi}{2x}\right)} J_{n+\frac{1}{2}}(x) = i^{-n} P_n\left(\frac{d}{i\,dx}\right)\left(\frac{\sin x}{x}\right),$$

very similar to that between the series

$$\Sigma \frac{a_n x^n}{n!}, \qquad \Sigma b_n P_n(x).$$

(iii.) Two formal proofs of the equation (2) are also worth mentioning: each of them might be made the basis of an accurate proof. The first is that by which (as he informs me) Mr. Bateman was originally led to the equation (1). If we start from the known expansion*

$$\frac{\sin m(t-x)}{t-x} = \pi \sum_0^\infty (2n+1) \frac{J_{n+\frac{1}{2}}(mt)}{\sqrt{t}} \frac{J_{n+\frac{1}{2}}(mx)}{\sqrt{x}};$$

* Hobson, *Proc. London Math. Soc.*, Vol. xxv,, pp. 60 *et seq.*; Nielsen, *Handbuch der Cylinderfunktionen*, pp. 278 *et seq.*

assume that $f(t)$ is expansible in a series of the form

$$\Sigma a_p \frac{J_{p+\frac{1}{2}}(mt)}{\sqrt{t}},$$

and that the two series may be multiplied together and integrated over the interval $(-\infty, \infty)$; and finally use the formula

$$\int_{-\infty}^{\infty} \frac{J_{n+\frac{1}{2}}(mx)}{\sqrt{x}} \frac{J_{p+\frac{1}{2}}(mx)}{\sqrt{x}} dx = 0 \ (n \neq p), \quad = \frac{1}{2n+1} \ (n = p),$$

we are at once led to the equation (2).

Or, again, (2) may be obtained by the use of the theory of "divergent integrals" that I have explained in two recent papers on that subject.* For if we put $t = u+x$, we obtain

$$\begin{aligned}\int_{-\infty}^{\infty} \frac{\sin mu}{u} f(u+x)\, du &= \int_0^{\infty} \frac{\sin mu}{u} \{f(u+x)+f(u-x)\}\, du \\ &= 2 \sum_{\nu=0}^{\infty} \frac{f^{2\nu}(x)}{2\nu!} G \int_0^{\infty} \sin mu\, u^{2\nu-1}\, du \\ &= \pi f(x).\end{aligned}$$

This formal process will, as I showed in the second of the two papers referred to above, certainly lead to a correct result, if (i.) $f(x)$ is an integral function, and (ii.) the series

$$\Sigma \frac{f^{(2\nu)}(x)}{2\nu!} G \int_0^{\infty} e^{-miu} u^{2\nu-1}\, du = \Sigma f^{2\nu}(x)(mi)^{-2\nu}$$

is convergent.

Although, as I stated above, each of these two processes may be made the foundation of an accurate proof that functions of a certain class are really m-functions, I shall not so use them, as other methods seem to be simpler and better.

III.

Direct discussion of the equation (2).

4. I shall now prove that, if $\phi(w)$ is subject to certain "conditions of inequality," *the function*

$$f(x) = \int_a^A \frac{\sin \mu(w-x)}{w-x} \phi(w)\, dw,$$

* *Quarterly Journal*, Vol. xxxv., pp. 22 *et seq.*; *Trans. Camb. Phil. Soc.*, Vol. xxi., pp. 1 *et seq.*

where μ is positive, and a and A have any real values, $-\infty$ and ∞ included, is an m-function for $m \geqslant \mu$.

The proof of this result depends on the formula

$$(4) \qquad \int_{-\infty}^{\infty} \frac{\sin m(t-x)}{t-x} \frac{\sin \mu(t-w)}{t-w}\, dt = \pi \frac{\sin \mu(w-x)}{w-x} \quad (0 < \mu \leqslant m).$$

In fact, if we denote the integral by J, we have

$$\begin{aligned} J &= \int_{-\infty}^{\infty} \frac{\sin \mu(t-w)}{t-w}\, dt \int_0^m \cos \xi(t-x)\, d\xi \\ &= \int_0^m d\xi \int_{-\infty}^{\infty} \frac{\sin \mu(t-w)}{t-w} \cos \xi(t-x)\, d\xi \\ &= \int_0^m d\xi \int_{-\infty}^{\infty} \frac{\sin \mu u}{u} \cos \xi(u-x+w)\, du \\ &= 2\int_0^m \cos \xi(w-x)\, d\xi \int_0^{\infty} \frac{\sin \mu u}{u} \cos \xi u\, du \\ &= \pi \int_0^{\mu} \cos \xi(w-x)\, d\xi = \pi \frac{\sin(w-x)}{w-x}; \end{aligned}$$

since $$\int_0^{\infty} \frac{\sin \mu u}{u} \cos \xi u\, du = \tfrac{1}{2}\pi \ (0 < \xi < \mu), \quad = 0 \ (\mu < \xi).$$

The only step in this transformation which requires justification is the inversion of the order of integration. The integral*

$$(5) \qquad \int_{-\infty}^{\infty} \frac{\sin \mu(t-w)}{t-w} \cos \xi t\, dt = \tfrac{1}{2} \int_{-\infty}^{\infty} \frac{\left[\sin\{(\mu+\xi)t-\mu w\} + \sin\{(\mu-\xi)t-\mu w\}\right]}{t-w}\, dt$$

is uniformly convergent in the intervals $0 \leqslant \xi \leqslant \mu-\delta$, $\mu+\delta' \leqslant \xi \leqslant m$, however small δ and δ' may be; but it is not (as the discontinuity in its value clearly shows) uniformly convergent for $\mu-\delta \leqslant \xi \leqslant \mu+\delta'$. We have, however, the equations

$$\int_0^{\mu-\delta} \int_{-\infty}^{\infty} = \int_{-\infty}^{\infty} \int_0^{\mu-\delta}, \qquad \int_{\mu+\delta'}^{m} \int_{-\infty}^{\infty} = \int_{-\infty}^{\infty} \int_{\mu+\delta'}^{m};$$

* In this discussion we have taken $x = 0$; as the general form of (4) may be deduced at once, by the transformation $t = x+u$, from the particular form in which $x = 0$, there is no real loss of generality in supposing $x = 0$.

and it remains only to prove that

$$(5a) \qquad \int_{-\infty}^{\infty}\int_{\mu-\delta}^{\mu+\delta'} = \int_{-\infty}^{\infty} \frac{\sin\mu(t-w)}{t-w}\,\frac{\sin(\mu+\delta')t-\sin(\mu-\delta)t}{t}\,dt$$

has the limit zero when δ and δ' converge in any manner to zero.

It is enough to prove this on the hypothesis that $\delta=\delta'$ (which simplifies the proof appreciably). For suppose this proved. Then

$$P\int_0^m\int_{-\infty}^{\infty} = \lim\left(\int_0^{\mu-\delta}+\int_{\mu+\delta}^{m}\right)\int_{-\infty}^{\infty}$$

exists, and has a value equal to $\int_{-\infty}^{\infty}\int_0^m$; but, as we know, by the actual calculations, that the first repeated integral is convergent even when the sign of the principal value is removed, we are justified in simply omitting this sign.

In order to effect the proof, we observe first that

$$\begin{aligned}\int_\alpha^\beta \sin\mu(t-w)\{\sin(\mu+\delta)t-\sin(\mu-\delta)t\}\,dt \\ = \tfrac{1}{2}\int_\alpha^\beta [\cos(\delta t+\mu w)-\cos(\delta t-\mu w) \\ -\cos\{(2\mu+\delta)t-\mu w\}+\cos\{(2\mu-\delta)t-\mu w\}]\,dt\end{aligned}$$

is, for all values of α and β, numerically less than

$$\frac{2}{\delta}+\frac{1}{2\mu+\delta}+\frac{1}{2\mu-\delta}.$$

If now we divide the integral (5a) (in which now $\delta=\delta'$) into three parts

$$\int_{-\infty}^{-p}+\int_{-p}^{p}+\int_{p}^{\infty} = i_1+i_2+i_3,$$

it is clear that $$|i_2|<Kp\delta.$$

Also, since $\dfrac{1}{(t-w)t}$ is monotonic, we can apply the second mean-value theorem to i_3; we thus obtain

$$|i_3|<\frac{K}{p^2}\left(\frac{2}{\delta}+\frac{1}{2\mu+\delta}+\frac{1}{2\mu-\delta}\right)<\frac{K}{p^2\delta}.$$

If now we observe that i_1 satisfies the same inequality, and suppose p such a function of δ that

$$p\delta\to 0, \quad p^2\delta\to\infty,$$

we see that $$|i_1| + |i_2| + |i_3| \to 0;$$

and our proof is accordingly completed.*

5. Now consider the integral

$$f(t) = \int_a^A \frac{\sin \mu (w-t)}{w-t} \phi(w)\, dw,$$

where $$0 < \mu \leqslant m.$$

I suppose first that a and A are finite. Multiplying by

$$\frac{\sin m(t-x)}{t-x},$$

and integrating from $-\infty$ to ∞, we obtain

$$\begin{aligned}\int_{-\infty}^{\infty} \frac{\sin m(t-x)}{t-x} f(t)\, dt &= \int_{-\infty}^{\infty} \frac{\sin m(t-x)}{t-x} dt \int_a^A \frac{\sin \mu (t-w)}{t-w} \phi(w)\, dw \\ &= \int_a^A \phi(w)\, dw \int_{-\infty}^{\infty} \frac{\sin m(t-x)}{t-x} \frac{\sin \mu (t-w)}{t-w} dt \\ &= \pi \int_a^A \frac{\sin \mu (w-x)}{w-x} \phi(w)\, dw = \pi f(x).\end{aligned}$$

This transformation will certainly be valid if

(i.) $\phi(w)$ is continuous for $a \leqslant w \leqslant A$, with the possible exception of a finite number of points ;†

(ii.) $\int_a^A |\phi(w)|\, dw$ is convergent.

For the only point which requires proof is that

$$\int_{-\infty}^{\infty} \frac{\sin m(t-x)}{t-x} \frac{\sin \mu (t-w)}{t-w} dt$$

---

* It is, I confess, surprising to me that a rigid proof of the equation (4) should be, comparatively speaking, so difficult to obtain.

[*Sept.*, 1909.—Mr. Berry and Dr. Bromwich have each pointed out to me that a simpler proof may be obtained as follows. We have

$$\int_{-\infty}^{\infty} \frac{\sin m(t-x)}{t-x} \frac{\sin \mu (t-w)}{t-w} dt = \frac{1}{w-x} \int_{-\infty}^{\infty} \left(\frac{1}{t-w} - \frac{1}{t-x} \right) \sin m(t-x) \sin \mu (t-w)\, dt.$$

Divide the integral into two parts, and put $t = u+w$ in the first and $t = u+x$ in the second. We then obtain

$$\frac{1}{\lambda} \int_{-\infty}^{\infty} \frac{\sin \mu u}{u} \sin m(u+\lambda)\, du - \frac{1}{\lambda} \int_{-\infty}^{\infty} \frac{\sin mu}{u} \sin \mu (u-\lambda)\, du,$$

where $\lambda = w-x$; and the result then follows easily from familiar formulæ. The integral may thus be evaluated without any inversion of limit operations.]

† This supposition could easily be generalised, but is general enough as it stands for our present purposes.

is uniformly convergent for $a \leqslant w \leqslant A$; and this is almost obvious, since

$$\left| \int_T^\infty \frac{\sin m(t-x)}{t-x} \frac{\sin \mu(t-w)}{t-w} \, dt \right| < K \int_T^\infty \frac{dt}{t^2} < \frac{K}{T}.$$

6. There remains the more difficult case in which a or A or both are infinite. The formal argument is then precisely the same, but the inversion of the integrations is a good deal harder to justify.

Let us suppose that $A = \infty$, and that

$$\int^\infty \frac{|\phi(w)|}{w} \, dw$$

is convergent. If this is so it is easy to see that

$$(6) \quad \int_a^\beta \frac{\sin m(t-x)}{t-x} dt \int_a^\infty \frac{\sin \mu(w-t)}{w-t} \phi(w) \, dw = \int_a^\infty \phi(w) \, dw \int_a^\beta \frac{\sin m(t-x)}{t-x} \frac{\sin \mu(w-t)}{w-t} \, dt$$

for any finite values of a and β. For, if we replace ∞ by A, we obtain an equation already established; and so all that remains is to show that

$$\int_a^\beta \frac{\sin m(t-x)}{t-x} \, dt \int_A^\infty \frac{\sin \mu(w-t)}{w-t} \phi(w) \, dw$$

is convergent and tends to zero as $A \to \infty$. Now, if K is any constant greater than unity, we can choose A so that

$$\left| \frac{w}{w-t} \right| < K \quad (A \leqslant w, \ a \leqslant t \leqslant \beta);$$

and it follows that the inner integral above is absolutely and uniformly convergent for $a \leqslant t \leqslant \beta$, and so a continuous function of t; and moreover that

$$\left| \int_A^\infty \frac{\sin \mu(w-t)}{w-t} \phi(w) \, dw \right| < K \int_A^\infty \frac{|\phi(w)|}{w} \, dw,$$

and so tends to zero as $A \to \infty$, uniformly for $a \leqslant t \leqslant \beta$. Hence our conclusion is established.

7. In order to pass from the equation (6) to the equation

$$(7) \quad \int_{-\infty}^\infty \frac{\sin m(t-x)}{t-x} dt \int_a^\infty \frac{\sin \mu(w-t)}{w-t} \phi(w) \, dw = \int_a^\infty \phi(w) \, dw \int_{-\infty}^\infty \frac{\sin m(t-x)}{t-x} \frac{\sin \mu(w-t)}{w-t} \, dt,$$

all that is necessary is to prove that

$$\int_a^\infty \phi(w) \, dw \int_T^\infty \frac{\sin m(t-x)}{t-x} \frac{\sin \mu(w-t)}{w-t} \, dt$$

is convergent, and has the limit zero as $T \to \infty$, together with a corresponding result involving $-\infty$ and $-T$ as the limits of integration with respect to t. We can write this repeated integral in the form

$$\int_a^\infty \phi(w) F(x-T, w-T)\, dw, \tag{8}$$

where

$$F(y, z) = \int_0^\infty \frac{\sin m(\xi-y)}{\xi-y} \frac{\sin \mu(\xi-z)}{\xi-z} d\xi. \tag{9}$$

I shall now establish certain inequalities satisfied by the function $F(y, z)$: the most convenient method for doing this is based upon a preliminary transformation of $F(y, z)$ by means of Cauchy's theorem.*

8. Consider the complex integral

$$\int \frac{e^{i[(m-\mu)x-my+\mu z]} - e^{i[(m+\mu)x-my-\mu z]}}{(x-y)(x-z)} dx$$

taken round the contour formed by the positive halves of the real and imaginary axes, and an "infinite quadrant of a circle" whose centre is the origin.†

Taking the real parts only of each term in the resulting equation, we obtain

$$F(y, z) = -\tfrac{1}{2}R \int_0^\infty \left\{ e^{-(m-\mu)\eta-(my-\mu z)i} - e^{-(m+\mu)\eta-(my+\mu z)i} \right\} \frac{i\, d\eta}{(i\eta-y)(i\eta-z)}. \tag{10}$$

Suppose first that $m > \mu$. Then

$$F(y, z) = -\frac{1}{2(y-z)} R(\chi_1+\chi_2+\chi_3+\chi_4), \tag{11}$$

where

$$\left\{ \begin{aligned} \chi_1(y, z) &= e^{-(my-\mu z)i} \int_0^\infty \frac{e^{-(m-\mu)\eta}\, i\, d\eta}{i\eta-y}, \\ \chi_2(y, z) &= -e^{-(my+\mu z)i} \int_0^\infty \frac{e^{-(m+\mu)\eta}\, i\, d\eta}{i\eta-y}, \\ \chi_3(y, z) &= -e^{-(my-\mu z)i} \int_0^\infty \frac{e^{-(m-\mu)\eta}\, i\, d\eta}{i\eta-z}, \\ \chi_4(y, z) &= -e^{-(my+\mu z)i} \int_0^\infty \frac{e^{-(m+\mu)\eta}\, i\, d\eta}{i\eta-z}. \end{aligned} \right. \tag{12}$$

* The results of this transformation can be found directly, but then much less simply.

† The subject of integration is regular for $x = z$, but has a pole for $x = y$; but, in the applications which we have in view, y is large and negative, so that it is unnecessary to consider the point $x = y$.

It is clear that

$$|\chi_1| < \int_0^\infty \frac{e^{-(m-\mu)\eta}}{\sqrt{(\eta^2+y^2)}}\,d\eta < \frac{1}{(m-\mu)\,|y|} < \frac{K}{|y|}, \tag{13}$$

and, similarly,

$$|\chi_2| < \frac{K}{|y|}, \quad |\chi_3| < \frac{K}{|z|}, \quad |\chi_4| < \frac{K}{|z|}. \tag{14}$$

We shall be considering only cases in which y is large and negative, and these inequalities will be sufficient so far as χ_1 and χ_2 are concerned. But z will be capable of assuming all real values, so that different inequalities will be needed for χ_3 and χ_4, when $|z|$ is comparatively small.

9. Now, if ρ is positive,

$$\int_0^\infty \frac{e^{-\rho\eta}\,d\eta}{\sqrt{(\eta^2+z^2)}} = \int_0^\infty \frac{e^{-\rho|z|u}}{\sqrt{(u^2+1)}}\,du < \int_0^{1/|z|} \frac{du}{\sqrt{(u^2+1)}} + \int_{1/|z|}^\infty \frac{e^{-\rho|z|u}}{u}\,du$$

$$= \log\left\{\frac{1}{|z|} + \sqrt{\left(1+\frac{1}{|z|^2}\right)}\right\} + \int_1^\infty \frac{e^{-\rho u}}{u}\,du < K(1+|\log|z||).$$

Hence

$$|\chi_3|, \quad |\chi_4| < \frac{K}{|z|}, \quad K(1+|\log|z||), \tag{15}$$

where either function may be chosen on either side of the inequality. From (11), (13), (14), and (15), we see that

$$|F(y,z)| < F_1+F_2, \tag{16}$$

where

$$\begin{cases} 0 < F_1 < \dfrac{K}{|y-z|\,|y|}, \\ 0 < F_2 < \dfrac{K}{|y-z|\,|z|}, \quad \dfrac{K}{|y-z|}(1+|\log|z||). \end{cases} \tag{17}$$

From these inequalities it follows at once that the integral (8) is convergent. Moreover

$$\left|\int_a^\infty \phi(w)\,F(-T,\,w-T)\,dw\right| < \int_a^\infty |\phi(w)|\,F_1\,dw + \int_a^\infty |\phi(w)|\,F_2\,dw.*$$

And

$$\int_a^\infty |\phi(w)|\,F_1\,dw < \frac{K}{T}\int_a^\infty \frac{|\phi(w)|}{w}\,dw,$$

* In what follows I suppose $x = 0$ and $a > 0$; it is obvious that this involves no loss of generality.

which tends to zero as $T \to \infty$. Also

$$\int_a^\infty |\phi(w)| F_2 dw = \left(\int_a^{T-\tau} + \int_{T-\tau}^{T+\tau} + \int_{T+\tau}^\infty\right) |\phi(w)| F_2 dw = j_1 + j_2 + j_3,$$

say, τ being at our disposal. Then

$$j_1 < \frac{K}{\tau}\int_a^\infty \frac{|\phi(w)|}{w} dw, \qquad j_3 < \frac{K}{\tau}\int_a^\infty \frac{|\phi(w)|}{w} dw,$$

and $j_2 < K\int_{-\tau}^{\tau} \frac{|\phi(T+u)|}{T+u}(1+|\log|u||)\, du < \frac{K}{T}\left(\tau + \int_{-\tau}^{\tau} |\log u^2|\, du\right)$;

and if we choose τ to be such a function of T that

$$\tau \to \infty, \qquad \frac{\tau \log \tau}{T} \to 0,$$

we see that j_1, j_2, j_3 all tend to zero as $T \to \infty$.

We have thus established the equation (7) on the hypotheses that (i.) $\phi(w)$ is continuous save for at most a finite number of values of w, (ii.) $\int |\phi(w)|\, dw$ is convergent over any finite interval, (iii.) $\int^\infty \frac{|\phi(w)|}{w} dw$ is convergent, and (iv.) $m > \mu$. Thus a function $f(x)$ defined as at the beginning of § 4 is certainly an m-function for $m > \mu$, even when $A = \infty$, provided $\phi(w)$ satisfies these conditions. A similar conclusion, of course, is valid when $a = -\infty$.

10. We have, however, still to complete the discussion in the case in which $m = \mu$. In this case the integrals χ_1 and χ_3 are not convergent. We have, however,

$$F(y, z) = -\tfrac{1}{2}R\left(\frac{\chi_2 + \chi_4}{y - z} + \chi\right), \tag{18}$$

where

$$\chi(y, z) = e^{-m(y-z)i}\int_0^\infty \frac{i\, d\eta}{(i\eta - y)(i\eta - z)}. \tag{19}$$

The value of the last integral is

$$\frac{1}{y - z}\left\{\log\frac{|z|}{|y|} + \tfrac{1}{2}\pi i\,(1 + sgn\, z)\right\}.$$

Hence (i.) $\chi \to 0$ as $T \to \infty$, uniformly throughout any finite interval of values of w, and

$$\text{(ii.)}\ |\chi| < \frac{K}{w}\left\{1 + \left|\log\left(1 - \frac{w}{T}\right)^2\right|\right\}.$$

From this inequality, coupled with those already established for χ_2 and χ_4, it follows at once that the integral (8) is convergent. And all that remains is to prove that

$$\int_a^\infty |\phi(w)|\,|\chi|\,dw$$

has the limit zero as $T \to \infty$.

Now we may write

$$\int_a^\infty |\phi(w)|\,|\chi|\,dw = \left(\int_a^H + \int_H^\infty\right) |\phi(w)|\,|\chi|\,dw$$

$$\leqslant \int_a^H |\phi(w)|\,|\chi|\,dw + \int_H^\infty |\phi(w)|\,\chi_1\,dw + \int_H^\infty |\phi(w)|\,\chi_2\,dw$$

$$= k_1 + k_2 + k_3,$$

say; where

$$0 < \chi_1 < \frac{K}{w}, \qquad 0 < \chi_2 < \frac{K}{w}\left|\log\left(1-\frac{w}{T}\right)^2\right|.$$

We shall be obliged to subject $\phi(w)$ to a slightly more stringent condition than was imposed upon it in § 6, viz., that

$$\int^\infty \frac{|\phi(w)|\log w}{w}\,dw \tag{20}$$

is convergent. I have proved elsewhere* that if this condition is satisfied then

$$\int_H^\infty \frac{|\phi(w)|}{w}\left|\log\left(1-\frac{w}{T}\right)^2\right| dw$$

has the limit zero as $T \to \infty$.

Now $$k_2 < K\int_H^\infty \frac{|\phi(w)|}{w}\,dw < K\int_H^\infty \frac{|\phi(w)|\log w}{w}\,dw.$$

We can therefore choose H so that $k_2 < \sigma$. When H is fixed we can choose T_0 so that $k_1 < \sigma$ and $k_3 < \sigma$ for $T \geqslant T_0$, and then

$$\int_a^\infty |\phi(w)|\,|\chi|\,dw < 3\sigma \quad (T \geqslant T_0).$$

Our proof is accordingly completed, for the part of $F(y, z)$ which involves χ_2 and χ_4 may be treated as before.

The conclusion at which we arrived at the end of § 9 may therefore be extended to the case in which $m = \mu$, provided we replace (iii.) by the

---

* See *Proc. London Math. Soc.*, Ser. 2, Vol. 7, pp. 201 *et seq.*

slightly more stringent condition involved in the convergence of the integral (20).

11. We may sum up the conclusions of §§ 4–10 as follows :—

Any function $f(x)$ defined by an integral of the type

$$f(x) = \int_a^A \frac{\sin \mu(w-x)}{w-x} \phi(w)\, dw, \tag{21}$$

where $\phi(w)$ is subject to the conditions—

(i.) *$\phi(w)$ is continuous save perhaps for a finite nunber of values of w,*

(ii.) *$\int |\phi(w)|\, dw$ is convergent over any finite interval,*

is an m-function for $m \geqslant \mu$.

This conclusion holds for $A = \infty$ or $a = -\infty$, provided that $m > \mu$, and that (iii.) *the integrals*

$$\int^{\infty} \frac{|\phi(w)|}{w} dw, \qquad \int_{-\infty} \frac{|\phi(w)|}{w} dw$$

are convergent.

It holds for $A = \infty$ or $a = -\infty$, even when $m = \mu$, provided that (iii'.) *the integrals*

$$\int^{\infty} \frac{|\phi(w)| \log w}{w} dw, \qquad \int_{-\infty} \frac{|\phi(w)| \log(-w)}{w} dw$$

are convergent.

Further, if $f(x)$ is an m-function for $m = \mu$, and satisfies the conditions (i.), (ii.), (iii.), *it is an m-function for $m \geqslant \mu$.*

Finally, if $f(x)$ is subject to the conditions (i.), (ii.), (iii'.), *then the necessary and sufficient condition that it should be an m-function is that it should be expressible in the form* (21), *with either finite or infinite limits.* For that this condition is *sufficient* has just been proved, and that it is *necessary* is obvious, an expression of the form required being obtained by taking $a = -\infty$, $A = \infty$, $\mu = m$, $\phi(w) \equiv f(w)$.

IV.

Generalisations and examples.

12. The results of the preceding sections are capable of various generalisations.

Suppose that $F(x, w)$ is an m-function for $a \leqslant w \leqslant A$, and that

$$f(x) = \int_a^A \phi(w)\, F(x, w)\, dw. \tag{22}$$

Then

$$\begin{aligned}\int_{-\infty}^{\infty} \frac{\sin m(t-x)}{t-x} f(t)\, dt &= \int_{-\infty}^{\infty} \frac{\sin m(t-x)}{t-x}\, dt \int_a^A \phi(w)\, F(t, w)\, dw \\ &= \int_a^A \phi(w)\, dw \int_{-\infty}^{\infty} \frac{\sin m(t-x)}{t-x} F(t, w)\, dt \\ &= \pi \int_a^A \phi(w)\, F(x, w)\, dw = \pi f(x);\end{aligned}$$

so that $f(x)$ is an m-function. If a and A are finite, the conditions (i.) that $F(x, w)$ is continuous, (ii.) that $\phi(w)$ is continuous save for a finite number of values of w, (iii.) that $\int_a^A |\phi(w)|\, dw$ is convergent, and (iv.) that

$$\int_{-\infty}^{\infty} \frac{\sin m(t-x)}{t-x} F(t, w)\, dt$$

is uniformly convergent for $a \leqslant w \leqslant A$, will certainly be sufficient to ensure the validity of the transformation. In particular the last condition will certainly be satisfied, if

$$|F(t, w)| < K|t|^{-s} \quad (s > 0),$$

for $a \leqslant w \leqslant A$, and all large values of $|t|$. When a or A is infinite the argument (as will be clear from the preceding discussion of a particular case) will involve much greater difficulties.

13. The most interesting cases of this general result are obtained by taking

$$F(x, w) = F(w-x), \quad F(xw).$$

Let us consider in particular the case in which

$$F(x, w) = \begin{matrix}\cos \\ \sin\end{matrix} wx.$$

We have to justify the equation

$$\int_{-\infty}^{\infty} \frac{\sin m(t-x)}{t-x}\, dt \int_a^A \phi(w) \begin{matrix}\cos \\ \sin\end{matrix} wt\, dw = \int_a^A \phi(w)\, dw \int_{-\infty}^{\infty} \frac{\sin m(t-x)}{t-x} \begin{matrix}\cos \\ \sin\end{matrix} wt\, dt.$$

If $-m < a < A < m$, the proof of this presents no difficulty, since the inner integral on the right-hand side is uniformly convergent for $a \leqslant w \leqslant A$ (cf. § 4). But, if $a = -m$ or $A = m$ (say the latter) the

convergence ceases to be uniform for $w = m$. We have then to prove in addition that

$$\int_{-\infty}^{\infty} \frac{\sin m(t-x)}{t-x}\, dt \int_{m-\delta}^{m} \phi(w) \begin{matrix}\cos \\ \sin\end{matrix} wt\, dw \tag{23}$$

is convergent and has the limit zero as $\delta \to 0$.

Let us, for example, take the cosine in the inner integral, and let us suppose that

$$\phi(w) = (m-w)^{-\alpha} \psi(w),$$

where $0 \leqslant \alpha < 1$ and $\psi(w)$ is continuous and monotonic in $(m-\delta,\ m)$. Suppose, *e.g.*, that $\psi(w)$ is positive and decreases as $w \to m$. Then

$$\int_{m-\delta}^{m} \frac{\psi(w)}{(m-w)^{\alpha}} \cos wt\, dw$$

$$= \int_0^{\delta} \frac{\psi(m-u)}{u^{\alpha}} \cos t(m-u)\, du$$

$$= \cos mt \int_0^{\delta} \frac{\psi(m-u)}{u^{\alpha}} \cos tu\, du + \sin mt \int_0^{\delta} \frac{\psi(m-u)}{u^{\alpha}} \sin tu\, du.$$

But
$$\int_0^{\delta} \frac{\psi(m-u)}{u^{\alpha}} \cos tu\, du = \psi(m-\delta) \int_{\delta'}^{\delta} \frac{\cos tu}{u^{\alpha}}\, du \quad (0 < \delta' < \delta)$$

$$= \psi(m-\delta)\, t^{-(1-\alpha)} \int_{\delta' t}^{\delta t} \frac{\cos u}{u^{\alpha}}\, du,$$

and is therefore in absolute value less than a constant multiple of $t^{-(1-\alpha)}$, and the same argument may be applied to the second integral. And from this it follows at once that (23) is absolutely and uniformly convergent in an interval of values of δ including $\delta = 0$, and so has the limit zero as $\delta \to 0$.

Hence *the integrals*

$$f(x) = \int_a^A \phi(w) \begin{matrix}\cos \\ \sin\end{matrix} wx\, dw$$

represent m-functions, if $-m < a < A < m$, *provided only that*

$$\int_a^A |\, \phi(w)\, |\, dw$$

is convergent. They represent m-functions when $A = m$, *if*

$$\phi(w) = (m-w)^{-\alpha} \psi(w),$$

where $0 \leqslant \alpha < 1$ *and* $\psi(w)$ *is continuous and monotonic near* $w = m$.

14. Suppose, for example, that $a = 0$, $A = 1$ and $\phi(w) = (1-w^2)^{\beta-\frac{1}{2}}$, where $\beta > -\frac{1}{2}$. Then

$$f(x) = \int_0^1 (1-w^2)^{\beta-\frac{1}{2}} \cos wx\, dw = 2^{\beta-1}\sqrt{\pi}\,\Gamma(\beta+\tfrac{1}{2})\,\frac{J_\beta(x)}{x^\beta}.$$

Hence $x^{-\beta}J_\beta(x)$ is an m-function if $m \geqslant 1$ and $\beta > -\frac{1}{2}$. If $m > 1$, the conclusion can be extended to all cases in which $\beta > -\frac{3}{2}$.

It may be worth while to set down here a few further examples of m-functions defined by integrals such as have been considered here.

(i.) If $\phi(w)$ is subject to the restrictions (i.), (ii.), and (iii.') of § 11, we know that

$$f(x) = \int_{-\infty}^{\infty} \frac{\sin\mu(w-x)}{w-x}\,\phi(w)\,dw,$$

is an m-function for $m \geqslant \mu$. If we assume that $\phi(w)$ is *even*, and that the order of integration may be changed, we find

$$f(x) = \int_0^\mu d\xi \int_{-\infty}^{\infty} \cos\xi(w-x)\,\phi(w)\,dw = 2\int_0^\mu \cos x\xi\, d\xi \int_0^\infty \cos\xi w\,\phi(w)\,dw.$$

The assumptions

$$\phi(w) = \frac{1}{a^2+w^2}\ (a>0), \quad |w|^{-s}\ (0<s<1), \quad e^{-a|w|}, \quad e^{-w^2/4a}\ (a>0)$$

lead to the following examples of m-functions (for $m \geqslant \mu$):

$$\frac{1}{\pi}\int_{-\infty}^{\infty} \frac{\sin\mu(w-x)}{w-x}\,\frac{dw}{a^2+w^2} = \int_0^\mu e^{-a\xi}\cos x\xi\, d\xi$$

$$= \frac{a(1-e^{-a\mu}\cos\mu x)+xe^{-a\mu}\sin\mu x}{a^2+x^2},$$

$$\frac{\cos\frac{1}{2}s\pi\,\Gamma(s)}{\pi}\int_{-\infty}^{\infty} \frac{\sin\mu(w-x)}{w-x}\,\frac{dw}{|w|^s} = \int_0^\mu \xi^{s-1}\cos x\xi\, d\xi,$$

$$\frac{1}{2a}\int_{-\infty}^{\infty} \frac{\sin\mu(w-x)}{w-x}\,e^{-a|w|}\,dw = \int_0^\mu \frac{\cos x\xi\, d\xi}{a^2+\xi^2},$$

$$\frac{1}{2\sqrt{(a\pi)}}\int_{-\infty}^{\infty} \frac{\sin\mu(w-x)}{w-x}\,e^{-w^2/4a}\,dw = \int_0^\mu e^{-a\xi^2}\cos x\xi\, d\xi.$$

(ii.) The function $\dfrac{J_\beta\{\sqrt{(x^2-2ax\cos\theta+a^2)}\}}{(x^2-2ax\cos\theta+a^2)^{\frac{1}{2}\beta}}$

is an m-function for $m \geqslant 1$, if $\beta > -\frac{1}{2}$. This follows from the fact that

it can be expressed in the form*

$$\frac{(a \sin\theta)^{\frac{1}{2}-\beta}}{\sqrt{(2\pi)}} \int_0^\pi \cos(x\cos\phi - a\cos\theta\cos\phi)\, J^{\beta-\frac{1}{2}}(a\sin\theta\sin\phi)(\sin\phi)^{\beta+\frac{1}{2}}\, d\phi,$$

if we put $\cos\phi = w$, and use the results of § 13. If $m > 1$, the conclusion can be extended to all cases in which $\beta > -\frac{3}{2}$.

V.

Treatment of the equation (2) *by contour integration.*

15. I shall now consider the equation (2) from a different point of view, which, however, is not entirely unconnected with that adopted in the preceding sections. In order to make the connection clear I shall consider the function

$$f(x) = \int_a^A \cos xw\, \phi(w)\, dw, \tag{23'}$$

where a and A are finite and $\int_a^A |\phi(w)|\, dw$ convergent. We saw in § 14 that this function is certainly an m-function, if $-m < a < A < m$.

The integral (23') is convergent for all values of x real or complex. The integral

$$\int_a^A (-w \sin xw)\, \phi(w)\, dw,$$

obtained by differentiation under the integral sign with respect to x, is also convergent, and uniformly so with respect to all values of x in any finite region of the x-plane. Hence, *the integral* (23') *represents an integral function of* x.

Again, if $x = u + iv$, where $v > 0$, we have

$$|\cos xw| < Ke^{v|w|},$$

and so

$$|f(x)| < \int_a^A e^{v|w|}\, |\phi(w)|\, dw < Ke^{av},$$

where a is the greater of $|a|$ and $|A|$, so that $a < m$.

Similar conclusions might be established (though in some cases with

* Nielsen, *Cylinderfunktionen*, p. 182.

much greater difficulty) about the other types of definite integrals that we have considered. They suggest the possibility of defining large classes of m-functions by a reference to their properties when considered as analytic functions of a complex variable; and this I shall now proceed to do.

16. Let us suppose that $t = u+iv$ is a complex variable, and that $f(t)$ is an integral function of t, real when t is real. Further, suppose that, when $v > 0$, $f(t)$ satisfies an inequality

$$|f(t)| < \lambda_1(|t|)\, e^{mv} + |t|\, \lambda_2(|t|)\, e^{\mu v}, \tag{24}$$

where $0 < \mu < m$, and λ_1 and λ_2 are positive functions of $|t|$ which tend to zero as $|t| \to \infty$.

Let us consider the integral

$$\int \frac{e^{mi(t-x)}}{t-x} f(t)\, dt$$

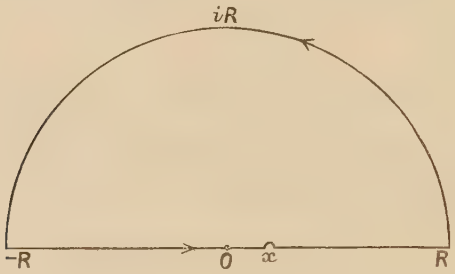

taken round the contour shown in the figure. It is clear that when the radius of the small semi-circle about the point $t = x$ is diminished indefinitely, we obtain

$$P\int_{-R}^{R} \frac{e^{mi(t-x)}}{t-x} f(t)\, dt = \pi i f(x) - J(R),$$

where $J(R)$ is the value of the integral round the large semi-circle.

Now, if on this semi-circle, we put $t = Re^{\phi i}$, we have

$$|e^{mi(t-x)}| = e^{-mR\sin\phi} = e^{-mv}, \qquad \left|\frac{1}{t-x}\right| < \frac{K}{R},$$

where K is a constant which, if R be large enough, may be taken as near to unity as we please. Hence

$$|J(R)| < j_1 + j_2,$$

where
$$0 < j_1 < K\lambda_1(R) \int_0^\pi d\phi = \pi K \lambda_1(R),$$

$$0 < j_2 < KR\lambda_2(R) \int_0^\pi e^{-(m-\mu)R\sin\phi}\, d\phi$$

$$< 2KR\lambda_2(R) \int_0^{\frac{1}{2}\pi} e^{-2(m-\mu)R\phi/\pi}\, d\phi$$

$$< \pi K \lambda_2(R)/(m-\mu).$$

Hence $J(R) \to 0$ as $R \to \infty$: and so, separating the real and imaginary parts, we obtain

$$(25) \qquad \begin{cases} P\int_{-\infty}^{\infty} \frac{\cos m(t-x)}{t-x} f(t)\, dt = 0, \\ P\int_{-\infty}^{\infty} \frac{\sin m(t-x)}{t-x} f(t)\, dt = \pi f(x). \end{cases}$$

In these equations, it should be observed, the symbol P refers, not only to the infinity of the subject of integration of the first integral for $t = x$, but also to the fact that each integral is defined as a limit

$$\lim_{R\to\infty} \int_{-R}^{R},$$

and not as a limit
$$\lim_{R,\, R'\to\infty} \int_{-R'}^{R}.$$

It is easy, however, to see that they remain true with the more general interpretation of the infinite limits in all cases in which *either* (*a*) the first term on the right-hand side of (24) may be omitted, or (*b*) the integral

$$\int^{\infty} \frac{\lambda_1(R)}{R}\, dR$$

is convergent. One or other of these circumstances will occur in all cases with which we shall be concerned, and then the symbol of the principal value in the second formula (25) may be omitted.

17. The following results are immediate applications of the theorem of § 16.

(i.) $\cos \mu x$ and $\sin \mu x$ are m-functions for $m > \mu$. The formulæ

$$P \int_{-\infty}^{\infty} \frac{\sin m(t-x)}{t-x} \begin{matrix}\cos \\ \sin\end{matrix} mt\,dt = \tfrac{1}{2}\pi \begin{matrix}\cos \\ \sin\end{matrix} mx,$$

show that they are *not* m-functions for $m = \mu$. On the other hand, $\sin\{\mu(x-a)\}/(x-a)$ is an m-function for $m \geqslant \mu$.

(ii.) The functions

$$\frac{J_\beta\{\mu(x-a)\}}{(x-a)^\beta}, \qquad \frac{J_\beta\{\mu\sqrt{(x^2-2ax\cos\theta+a^2)}\}}{(x^2-2ax\cos\theta+a^2)^{\frac{1}{2}\beta}}$$

are m-functions, if $0 < \mu < m$ and $\beta > -\frac{3}{2}$, or if $m = \mu$ and $\beta > -\frac{1}{2}$.

(iii.) The function

$$\frac{J_\beta\{\mu(x-a)\}}{(x-a)^\beta} \begin{matrix}\cos \\ \sin\end{matrix} \mu'(x-a'),$$

is an m-function, if $0 < \mu < \mu+\mu' < m$ and $\beta > -\frac{3}{2}$, or if $\mu+\mu' = m$ and $\beta > -\frac{1}{2}$. And such examples may, of course, be multiplied indefinitely; some of them have already been obtained by other methods.

VI.

The function $\dfrac{\sin m(t-x)}{t-x}$ *as the kernel of an integral equation.*

18. In the preceding sections I have used only the classical methods of analysis, and have made no reference to the ideas of the theory of integral equations. It is, however, of some interest to consider briefly the properties of

$$K(t,x) = \frac{\sin m(t-x)}{t-x} \tag{26}$$

as a "kernel" of an integral equation. It is convenient to divide the kernel by the constant factor π: it then possesses the property

$$\int_{-\infty}^{\infty} K(t,x)\,K(t,y)\,dt = K(x,y), \tag{27}$$

and its properties are shared by any symmetrical kernel which possesses this particular property.

We have to consider the equations

$$f(x) = \int_{-\infty}^{\infty} K(t, x)\, u(t)\, dt, \tag{28}$$

$$u(x) = F(x) + \lambda \int_{-\infty}^{\infty} K(t, x)\, u(t)\, dt, \tag{29}$$

where $f(x)$ is a given function.

If we multiply (28) by $K(x, y)$, integrate from $-\infty$ to $+\infty$, and assume that the order of integration can be changed, we obtain

$$\int_{-\infty}^{\infty} K(x, y)\, f(x)\, dx = \int_{-\infty}^{\infty} u(t)\, dt \int_{-\infty}^{\infty} K(t, x)\, K(x, y)\, dx$$

$$= \int_{-\infty}^{\infty} K(t, y)\, u(t)\, dt = f(y).$$

Hence, *the equation* (28) *has no solution unless*

$$f(x) = \int_{-\infty}^{\infty} K(t, x)\, f(t)\, dt, \tag{28a}$$

in which case it has the solution $u(x) = f(x)$. A more general solution is $u(x) = f(x) + F(x)$, where $F(x)$ is any solution of

$$\int_{-\infty}^{\infty} K(t, x)\, F(t)\, dt = 0. \tag{28b}$$

Now apply the same process to (29). We find

$$\int_{-\infty}^{\infty} K(x, y)\, u(x)\, dx = \int_{-\infty}^{\infty} K(x, y)\, F(x)\, dx + \lambda \int_{-\infty}^{\infty} K(t, y)\, u(t)\, dt.$$

From this it follows that, *unless* $\lambda = 1$, *the equation* (29) *has the one solution*

$$u(x) = F(x) + \frac{\lambda}{1-\lambda} \int_{-\infty}^{\infty} K(t, x)\, F(t)\, dt.$$

On the other hand, if $\lambda = 1$, the equation has no solution unless $F(x)$ is a solution of (28*b*), in which case $u(x) = F(x)$ is a solution. A more general solution is $u(x) = F(x) + f(x)$, where $f(x)$ is any solution of (28*a*).

The kernel has the one *Eigenwert* 1, to which correspond an infinity of *Eigenfunktionen*. When the kernel is

$$\frac{1}{\pi} \frac{\sin m(t-x)}{t-x},$$

these latter are, in fact, our m-functions.

I have been content to give formal proofs of these assertions, as my only object is to indicate generally the nature of this particular kernel. It is well known that, when the interval of integration is infinite, the fundamental results of the ordinary theory of integral equations lose their validity. For example, Weyl* has discussed in detail a class of kernels (*Fourierkerne*) which have two *Eigenwerte* (-1 and $+1$).

VII.

Inversion formulæ satisfied by m-functions.

20. Suppose that we can express

$$\frac{\sin m(t-x)}{t-x}$$

in the form

$$\frac{\sin m(t-x)}{t-x} = \int_\alpha^\beta \phi(\lambda, x)\,\psi(\lambda, t)\,d\lambda. \tag{30}$$

If we multiply this equation by $f(t)$, an m-function, and integrate from $t=-\infty$ to $+\infty$, inverting the order of integration on the right-hand side, we are led formally to the equations

$$\pi f(x) = \int_\alpha^\beta \phi(\lambda, x)\,d\lambda \int_{-\infty}^{\infty} \psi(\lambda, t)\,f(t)\,dt, \tag{31}$$

$$\left\{\begin{aligned} F(\lambda) &= \int_{-\infty}^{\infty} \psi(\lambda, t)\,f(t)\,dt, \\ \pi f(x) &= \int_\alpha^\beta \phi(\lambda, x)\,F(\lambda)\,d\lambda. \end{aligned}\right. \tag{32}$$

In each case, of course, the validity of our transformations requires a special discussion.

Mr. Bateman, in the paper already referred to, gave two examples of

---

* *Inaug. Diss.*, Göttingen, 1908, and *Math. Annalen*, Bd. LXVI., s. 273. See also Bôcher, *Introduction to Integral Equations* (Cambridge Tracts, No. 10, p. 70).

such inversion formulæ, based on the equations

$$\frac{\sin m(t-x)}{t-x} = \tfrac{1}{2}m\int_{-1}^{1} e^{-m(t-x)\lambda i}\,d\lambda, \tag{33}$$

$$\frac{\sin m(t-x)}{t-x} = \tfrac{1}{2}m\pi\int_{x}^{\infty} J_0\{m(\lambda-x)\}\,\frac{J_1\{m(\lambda-t)\}}{\lambda-t}\,d\lambda. \tag{34}$$

I do not propose to discuss the second of these two equations here, but I shall conclude this paper by (1) stating sufficient conditions for the truth of Mr. Bateman's first inversion formula, and (2) investigating another formula of a slightly different character.

21. (1) If

$$F(\lambda) = \int_{-\infty}^{\infty} e^{-m\lambda t i} f(t)\,dt, \tag{35}$$

$f(t)$ being an m-function such that the integral is convergent, and if we multiply by $e^{mx\lambda i}$, and integrate from $\lambda = -1$ to $\lambda = 1$, inverting the order of integration on the right-hand side, we obtain

$$\begin{aligned}\int_{-1}^{1} e^{mx\lambda i} F(\lambda)\,d\lambda &= \int_{-1}^{1} e^{mx\lambda i}\,d\lambda \int_{-\infty}^{\infty} e^{-m\lambda t i} f(t)\,dt \\ &= \int_{-\infty}^{\infty} f(t)\,dt \int_{-1}^{1} e^{-m(t-x)\lambda i}\,d\lambda \\ &= \frac{2}{m}\int_{-\infty}^{\infty} \frac{\sin m(t-x)}{t-x} f(t)\,dt,\end{aligned}$$

or

$$f(x) = \frac{m}{2\pi}\int_{-1}^{1} e^{mx\lambda i} F(\lambda)\,d\lambda. \tag{35'}$$

The transformation is certainly justifiable, if (i.) $f(t)$ is continuous except for a finite number of values of t, (ii.) the integral $\int |f(t)|\,dt$ is convergent over any finite interval, and (iii.) the integral (35) is uniformly convergent for $-1 \leqslant \lambda \leqslant 1$.* But this last condition is unnecessarily restrictive

* Cf. Bateman, *l.c.*, p. 483.

and would prevent the application of the result to some of the simplest and most natural cases. For example, suppose that

$$f(t) = \frac{\sin \mu t}{t} \quad (0 < \mu < m).$$

Then
$$F(\lambda) = 2\int_0^\infty \frac{\sin \mu t}{t} \cos m\lambda t\, dt = \pi \quad (-\mu < m\lambda < \mu),$$
$$= 0 \quad (|m\lambda| > \mu),$$

and
$$\frac{m}{2\pi}\int_{-1}^{1} e^{mx\lambda i} F(\lambda)\, d\lambda = \tfrac{1}{2}m\int_{-\mu/m}^{\mu/m} e^{mx\lambda i}\, d\lambda = \frac{\sin \mu x}{x}.$$

But the integral (35) is non-uniformly convergent near $\lambda = \pm \mu/m$.

I shall suppose that the integral (35) is uniformly convergent except for a finite number of values of λ, a number which we may without loss of generality suppose to be one; say for $\lambda = \lambda_0$. Then

$$\int_{-\infty}^{\infty} f(t)\, dt \left(\int_{-1}^{\lambda_0-\delta} + \int_{\lambda_0+\delta'}^{1}\right) e^{-m(t-x)\lambda i}\, d\lambda$$
$$= \left(\int_{-1}^{\lambda_0-\delta} + \int_{\lambda_0+\delta'}^{1}\right) e^{mx\lambda i}\, d\lambda \int_{-\infty}^{\infty} e^{-m\lambda t i} f(t)\, dt.$$

The inversion of the integrations will be justified if

$$\int_{-\infty}^{\infty} f(t)\, dt \int_{\lambda_0-\delta}^{\lambda_0+\delta'} e^{-m(t-x)\lambda i}\, d\lambda = \int_{-\infty}^{\infty} \frac{e^{-m(t-x)(\lambda_0-\delta)i} - e^{-m(t-x)(\lambda_0+\delta')i}}{mi(t-x)} f(t)\, dt$$

is convergent, and has the limit zero as δ and δ' tend to zero.

Write the last integral in the form

$$\int_{-\infty}^{-T} + \int_{-T}^{T} + \int_{T}^{\infty} = j_1 + j_2 + j_3,$$

say. Then j_2 is certainly convergent, and tends to zero with δ and δ'. A sufficient condition that j_3 should do so is that

$$\int_T^\infty \frac{e^{-m(t-x)\lambda i}}{t-x} f(t)\, dt$$

should be convergent and represent a continuous function of λ: and this will certainly be the case, if

$$\int^\infty \frac{|f(t)|}{t}\, dt$$

is convergent. A similar argument may be applied to j_1, and so we deduce the following result :—

Mr. Bateman's inversion formula, expressed by the equations (35), (35′) *will certainly be true, if* (i.) $f(t)$ *is an m-function, with at most a finite number of discontinuities,* (ii.) $\int |f(t)|\,dt$ *is continuous over any finite interval,* (iii.) *the integral* (35) *is uniformly convergent save for a finite number of values of* λ, *and* (iv.) *the integrals*

$$\int^{\infty} \frac{|f(t)|}{t}\,dt, \qquad \int_{-\infty} \frac{|f(t)|}{t}\,dt$$

are convergent.

22. In conclusion I shall investigate a new inversion formula, satisfied by m-functions. I shall begin by determining the value of the integral

$$I_{\mu,\nu} = \int_{-\infty}^{\infty} \frac{J_\mu\{m(x-a)\}}{(x-a)^\mu} \frac{J_\nu\{m(x-b)\}}{(x-b)^\nu}\,dx, \tag{36}$$

which is convergent, if $\mu+\nu > 0$, a and b being supposed to be real, and m positive. I shall suppose first that

$$\mu > \tfrac{1}{2}, \quad \nu > -\tfrac{1}{2},$$

and that the integral has been reduced, by the substitution $x-b=\xi$, to the particular case in which $b=0$. We have then

$$\begin{aligned} I_{\mu,\nu} &= \frac{2^{1-\nu}m^\nu}{\sqrt{\pi}\,\Gamma(\nu+\tfrac{1}{2})} \int_{-\infty}^{\infty} \frac{J_\mu\{m(x-a)\}}{(x-a)^\mu}\,dx \int_0^{\frac{1}{2}\pi} \cos(mx\sin\phi)(\cos\phi)^{2\nu}\,d\phi \\ &= \frac{2^{1-\nu}m^\nu}{\sqrt{\pi}\,\Gamma(\nu+\tfrac{1}{2})} \int_0^{\frac{1}{2}\pi} (\cos\phi)^{2\nu}\,d\phi \int_{-\infty}^{\infty} \frac{J_\mu\{m(x-a)\}}{(x-a)^\mu} \cos(mx\sin\phi)\,dx \\ &= \frac{2^{2-\nu}m^\nu}{\sqrt{\pi}\,\Gamma(\nu+\tfrac{1}{2})} \int_0^{\frac{1}{2}\pi} \cos(ma\sin\phi)(\cos\phi)^{2\nu}\,d\phi \int_0^{\infty} \frac{J_\mu(mx)}{x^\mu} \cos(mx\sin\phi)\,dx. \end{aligned}$$

Now, if $\mu > -\tfrac{1}{2}$,*

$$\int_0^{\infty} \frac{J_\mu(mx)}{x^\mu} \cos(mx\sin\phi)\,dx = \frac{2^{-\mu}m^{\mu-1}\sqrt{\pi}}{\Gamma(\mu+\tfrac{1}{2})} (\cos\phi)^{2\mu-1}.$$

---

* Nielsen, *Cylinderfunktionen*, p. 198, where we must put $\rho = -\tfrac{1}{2}$.

Hence we obtain

$$\frac{2^{2-\mu-\nu}\, m^{\mu+\nu-1}}{\Gamma(\mu+\frac{1}{2})\,\Gamma(\nu+\frac{1}{2})}\int_0^{\frac{1}{2}\pi}\cos(ma\sin\phi)(\cos\phi)^{2\mu+2\nu-1}\,d\phi$$
$$=\frac{\Gamma(\mu+\nu)\,\sqrt{(2\pi/m)}}{\Gamma(\mu+\frac{1}{2})\,\Gamma(\nu+\frac{1}{2})}\,\frac{J_{\mu+\nu-\frac{1}{2}}(ma)}{a^{\mu+\nu-\frac{1}{2}}}.$$

Accordingly,

$$(37)\quad \int_{-\infty}^{\infty}\frac{J_\mu\{m(x-a)\}}{(x-a)^\mu}\,\frac{J_\nu\{m(x-b)\}}{(x-b)^\nu}\,dx$$
$$=\frac{\Gamma(\mu+\nu)\,\sqrt{(2\pi/m)}}{\Gamma(\mu+\frac{1}{2})\,\Gamma(\nu+\frac{1}{2})}\,\frac{J_{\mu+\nu-\frac{1}{2}}\{m(a-b)\}}{(a-b)^{\mu+\nu-\frac{1}{2}}}.$$

It is easy to verify that, when $\mu=\nu=\frac{1}{2}$, this formula reduces to (4).

If, as we supposed, $\mu>\frac{1}{2}$, the integral

$$\int_{-\infty}^{\infty}\frac{J_\mu\{m(x-a)\}}{(x-a)^\mu}\cos(mx\sin\phi)\,dx$$

is absolutely and uniformly convergent for $0\leqslant\phi\leqslant\frac{1}{2}\pi$, and the inversion of the order of integration needs no special justification. The formula (37) holds, however, for a wider range of values of μ and ν, in fact for all values of μ and ν such that $\mu+\nu>0$, and neither μ nor ν is a negative integer. It is, in fact, easy to see that both sides of (37) represent analytic functions of μ and ν regular throughout any region bounded by inequalities of the type

$$0<\mu+\nu,\quad |\mu|+|\nu|<K,\quad |\mu+n|>\delta>0,\quad |\nu+n|>\delta>0,$$

for $n=1, 2, \ldots$.

The most interesting case is that in which $\mu+\nu=1$. We then obtain

$$(38)\quad \int_{-\infty}^{\infty}\frac{J_\mu\{m(x-a)\}}{(x-a)^\mu}\,\frac{J_{1-\mu}\{m(x-b)\}}{(x-b)^{1-\mu}}\,dx=\frac{4\cos\mu\pi}{(1-2\mu)\,m\pi}\,\frac{\sin\{m(a-b)\}}{a-b},$$

which holds for all values of μ other than $-1, -2, \ldots, 2, 3, \ldots$ [except for $\mu=\frac{1}{2}$, when the formula reduces to (4)].

23. From (38) we deduce, by the formal argument of § 20, the inversion formulæ

$$(39)\quad \frac{4\cos\mu\pi}{(1-2\mu)\,m}f(x)=\int_{-\infty}^{\infty}\frac{J_{1-\mu}\{m(\lambda-x)\}}{(\lambda-x)^{1-\mu}}\,d\lambda\int_{-\infty}^{\infty}\frac{J_\mu\{m(t-\lambda)\}}{(t-\lambda)^\mu}\,f(t)\,dt,$$

$$(40)\quad \begin{cases} F(\lambda)=\displaystyle\int_{-\infty}^{\infty}\frac{J_\mu\{m(t-\lambda)\}}{(t-\lambda)^\mu}\,f(t)\,dt, \\ \dfrac{4\cos\mu\pi}{(1-2\mu)\,m}f(x)=\displaystyle\int_{-\infty}^{\infty}\frac{J_{1-\mu}\{m(\lambda-x)\}}{(\lambda-x)^{1-\mu}}\,F(\lambda)\,d\lambda, \end{cases}$$

where, of course, $f(t)$ is an m-function. The validity of the formula rests on the inversion of integrations expressed by

$$\int_{-\infty}^{\infty} \frac{J_{1-\mu}\{m(\lambda-x)\}}{(\lambda-x)^{1-\mu}}\,d\lambda \int_{-\infty}^{\infty} \frac{J_{\mu}\{m(t-\lambda)\}}{(t-\lambda)^{\mu}} f(t)\,dt$$

$$= \int_{-\infty}^{\infty} f(t)\,dt \int_{-\infty}^{\infty} \frac{J_{1-\mu}\{m(\lambda-x)\}}{(\lambda-x)^{1-\mu}} \frac{J_{\mu}\{m(t-\lambda)\}}{(t-\lambda)^{\mu}}\,d\lambda.$$

As all the limits are infinite it is not a very easy matter to investigate reasonably general conditions for the legitimacy of this inversion. And, in view of the length to which this paper has already extended, I shall not attempt to treat the question in any generality. I shall confine myself to taking the very simplest hypotheses possible, so as to show at any rate that there are *some* functions for which a rigorous proof is possible. I shall suppose that $-\frac{1}{2} < \mu < \frac{1}{2}$, and that the integral

$$\int_{-\infty}^{\infty} |f(t)|\,dt$$

is convergent. Then

$$\int^{\infty} \frac{|f(t)|}{t^{\mu+\frac{1}{2}}}\,dt, \qquad \int_{-\infty} \frac{|f(t)|}{(-t)^{\mu+\frac{1}{2}}}\,dt$$

are convergent, and the inner integral on the left-hand side is absolutely and uniformly convergent throughout any finite interval of values of λ. Hence

$$\int_{-\lambda_1}^{\lambda_2}\int_{-\infty}^{\infty} = \int_{-\infty}^{\infty}\int_{-\lambda_1}^{\lambda_2},$$

for any positive values of λ_1 and λ_2, and it remains only to show that

$$\int_{-\infty}^{\infty} f(t)\,dt \int_{\lambda_2}^{\infty} \frac{J_{1-\mu}\{m(\lambda-x)\}}{(\lambda-x)^{1-\mu}} \frac{J_{\mu}\{m(t-\lambda)\}}{(t-\lambda)^{\mu}}\,d\lambda$$

is convergent, and has the limit zero when $\lambda_2 \to \infty$, together with a corresponding result relating to $-\lambda_1$. This will certainly be the case if the same is true of

$$\int_{-\infty}^{\infty} |f(t)|\,dt \int_{\lambda_2}^{\infty} \left| \frac{J_{\mu}\{m(t-\lambda)\}}{(t-\lambda)^{\mu}} \right| \frac{d\lambda}{(\lambda-x)^{\frac{3}{2}-\mu}}.$$

But

$$\left| \frac{J_{\mu}\{m(t-\lambda)\}}{(t-\lambda)^{\mu}} \right| < K,$$

$$K \int_{\lambda_2}^{\infty} \frac{d\lambda}{(\lambda-x)^{\frac{3}{2}-\mu}} < \frac{K}{\lambda_2^{\frac{1}{2}-\mu}}.$$

Hence the repeated integral last written is in absolute value less than

$$K\lambda_2^{-(\frac{1}{2}-\mu)},$$

and tends to zero as $\lambda_2 \to \infty$.

These conditions would be satisfied, *e.g.*, if

$$f(t) = t^{-\rho} J_\rho(\lambda t),$$

where $0 < \lambda \leqslant m$ and $\rho > \frac{1}{2}$. They are, of course, far from being as general as they might be made: but a more detailed investigation would carry us too far to be undertaken at this stage, and they suffice at any rate to show that the formulæ (39), (40) are amenable to accurate methods.

THE ELIMINANT OF THREE QUANTICS IN TWO INDEPENDENT VARIABLES

(SECOND PAPER.)

By A. L. DIXON.

[Read December 10th, 1908.—Received January 8th, 1909.

THIS paper is a continuation of one having the same title which was read before the Society on November 12th, 1908, and published in the *Proceedings*, Ser. 2, Vol. 7, pp. 49–69. The paragraphs are numbered in continuation of those of the previous paper. The first section, §§ 23–27, contains a general theorem as to the expansion of determinants, which is shown to be specially applicable to eliminants. This theorem is analogous to one already given for a symmetrical determinant in a paper entitled "On a Form of the Eliminant of Two Quantics" (*Proceedings*, Ser. 2, Vol. 6, p. 468); references to this paper are denoted by I.

In the next two paragraphs 28, 29, it is shown that the determinant whose constituents are $F(a, b, \alpha, \beta)$, will vanish for three quantics of the ordinary standard form of degree greater than two, and its value for three quadratics is given.

The last section, §§ 30–41, contains some theorems as to the common roots of two quantics, the theorems being obtained by comparing together different expressions for the eliminant of three quantics.

In particular, what Sylvester has called the Osculant or Tact Invariant of two curves is found as the square of a determinant, whose constituents are the powers and products of the coordinates of the common points, and expressions for the eliminant of three quantics are found in terms of common roots of pairs of the quantics.

CONTENTS.

§§ 23, 24, 25.—A formula for the expansion of any determinant.
26, 27.—Special application to the eliminant determinants.
28.—The determinant whose elements are $F(a, b, \alpha, \beta)$ vanishes identically in general.
29.—Its value found for the case of three quadratics.
30.—Theorems as to the common roots of two ternary quantics.
31.—The weight of the eliminant of quantics $\Sigma a_{rs}x^r y^s$ ($r \leqslant n$, $s \leqslant m$).
32.—The expression of the eliminant in terms of the roots.
33.—$\Pi \frac{\partial(\phi_r, \chi_r)}{\partial(\alpha_r, \beta_r)}$ as the product of two determinants.
34.—Verification of a special case.
35.—Another theorem.
36, 37, 38, 39.—Analogous formulæ for quantics of the ordinary standard form. The osculant or tact invariant expressed in terms of the common roots as the square of a determinant.
*40.—Similar formulæ for quantics not of the same degree.
*41.—The expression of the eliminant of three quantics in terms of the common roots of pairs of the quantics.

A formula for the expansion of any determinant.

23. Take any determinant, of order n, the elements of which, those of the principal diagonal excepted, are denoted by $-(r, s)$, where r is the column number, and s the row number, the minus sign being prefixed for convenience. For the r-th element of the principal diagonal write $\Sigma(t, r)$, where

$$\Sigma(t, r) = (1, r)+(2, r)+\ldots+(n, r)+(n+1, r),$$

the term (r, r) being omitted; the notation $(n+1, r)$ for the last term of the Σ being merely used for symmetry, and having, as far as $n+1$ is concerned, no place significance.

Thus, for any given determinant whose elements are denoted in the usual way by a_{rs}, we put

$$(r, s) = -a_{rs} \quad (r \neq s),$$

and the value of $(n+1, r)$ is given by the relation

$$(n+1, r) = \sum_{s=1}^{s=n} a_{sr}.$$

Then with regard to the expansion of such a determinant

$$\begin{vmatrix} \Sigma(t, 1), & -(2, 1), & -(3, 1), & \ldots \\ -(1, 2), & \Sigma(t, 2), & -(3, 2), & \ldots \\ -(1, 3), & -(2, 3), & \Sigma(t, 3), & \ldots \\ \ldots & \ldots & \ldots & \ldots \end{vmatrix}$$

* §§ 40, 41 were added March 15th.

in sums of products of (r, s), n at a time, it is to be noticed that—

(i.) The number $n+1$ must occur in every such product at least once, since if all the terms containing $n+1$ are crossed out, the determinant vanishes.

(ii.) Of the other numbers 1, 2, 3, ..., n, with regard to which the determinant is symmetrical, there must be at least one which occurs only once in each product, since if each number occurred twice, we should on adding in the number $n+1$, which occurs once, have $2n+1$ numbers, and the total number of numbers is $2n$.

Thus on account of the symmetry with respect to the n numbers 1, 2, 3, ..., n, the expansion of the determinant is completely determined, if the terms which contain any selected number once only are known.

24. The expansion of the determinant of the second order is obviously

$$(3, 1)(3, 2) + (3, 1)(1, 2) + (2, 1)(3, 2),$$

and for the determinant of the third order, the terms which contain the figure 1 once only, are at once written down from this, viz. :—

$$[(2, 1) + (3, 1) + (4, 1)][(4, 2)(4, 3) + (4, 2)(2, 3) + (3, 2)(4, 3)],$$

and the complete expression is

$$\begin{aligned}
&(2, 1)(4, 2)(4, 3) + (2, 1)(4, 2)(2, 3) + (2, 1)(3, 2)(4, 3) \\
&+ (3, 1)(4, 2)(4, 3) + (3, 1)(4, 2)(2, 3) + (3, 1)(3, 2)(4, 3) \\
&+ (4, 1)(4, 2)(4, 3) + (4, 1)(4, 2)(2, 3) + (4, 1)(3, 2)(4, 3) \\
&+ (4, 1)(1, 2)(4, 3) + (4, 1)(1, 2)(1, 3) + (3, 1)(1, 2)(4, 3) \\
&+ (4, 1)(3, 2)(1, 3) + (4, 1)(4, 2)(1, 3) + (4, 1)(1, 2)(2, 3) \\
&+ (2, 1)(4, 2)(1, 3).
\end{aligned}$$

Then, exactly as in (I., §§ 3, 4), we may establish by induction the following rule for writing down the terms of the expansion of the determinant, as products of n brackets (r, s):—Take n brackets, and put the numbers 1, 2, 3, ..., n, one in each bracket, as the second number in the bracket. Fill in the first number of the bracket in every possible way with the numbers 1, 2, 3, ..., $n+1$, so that $n+1$ occurs at least once, and that in any one term no two brackets occur which contain the same pair of numbers.

Then the sum of all the terms obtained in this way, each with a positive sign, is the expansion of the determinant.

The number of terms in the expansion is $(n+1)^{n-1}$. This can be proved, either by the method of I., § 5, or by that of the note, I., p. 478.

25. It is curious to notice that taking, as in § 23, any given determinant whose elements are a_{rs}, and writing as before $(r, s) = -a_{rs}$, and further defining $(n+1, r)$ as $\sum_{s=1}^{s=n} a_{sr}$, and also defining $(r, n+1)$ as $\sum_{s=1}^{s=n} a_{rs}$, so that

$$a_{rr} = \sum_t (t, r) = \sum_t (r, t),$$

for all values of r, the determinant in its new form

$$\begin{vmatrix} \Sigma(1, s), & -(2, 1), & -(3, 1), & \dots \\ -(1, 2), & \Sigma(2, s), & -(3, 2), & \dots \\ -(1, 3), & -(2, 3), & \Sigma(3, s), & \dots \\ \dots & \dots & \dots & \dots \end{vmatrix}$$

is symmetrical with respect to all the numbers 1, 2, 3, ..., $n+1$, as may be seen by adding all the columns to the last column, and then all the rows to the last row, the effect of this operation being to interchange the numbers n and $n+1$.

26. The importance of this expansion theorem with regard to the determinants, whose elements are $F(a_r, b_r, a_s, \beta_s)$, which have been found in §§ 17, 18, lies in the fact that these determinants naturally take the required form when we put $a_r = a_r$, $b_r = \beta_r$, for all values of r.

For, if we put $a_r = a_r$, $b_r = \beta_r$, the elements of the determinant $F(a_r, b_r, a_s, \beta_s)$ become $F(a_r, \beta_r, a_s, \beta_s)$, with the exception of those of the principal diagonal, and for a term of the principal diagonal, we have

$$\begin{aligned} \operatorname*{Lt}_{a_r=a_r,\ b_r=\beta_r} & F(a_r, b_r, a_r, \beta_r) \\ &= \operatorname*{Lt}_{\theta=0,\ \phi=0} |\, \phi(a_r+\theta, \beta_r+\phi),\ \phi(a_r+\theta, \beta_r),\ \phi(a_r, \beta_r) \,|\, /\theta\phi \\ &= \left| \phi(a_r, \beta_r),\ \frac{\partial\phi(a_r, \beta_r)}{\partial\beta_r},\ \frac{\partial\phi(a_r, \beta_r)}{\partial a_r} \right|. \end{aligned}$$

But if, as in § 19, we take

$$F(a, b, x, y) \equiv (\phi(a, b),\ \chi(a, y),\ \psi(x, y)) / (x-a)(y-b),$$

as containing $2mn$ terms when expanded in terms of x and y, and so as determined by $2mn$ values of x, y, we have, when we take $2mn+1$ values of x, y, viz., α_1, β_1; α_2, β_2; ..., the identity

$$\sum_{r=1}^{r=2mn+1} F(a, b, \alpha_r, \beta_r)\,\omega_r = 0,$$

where ω_r is the co-factor of $F(a, b, \alpha_r, \beta_r)$ in the determinant, of order $2mn+1$, whose r-th row is

$$|\,F(a, b, \alpha_r, \beta_r),\ 1,\ \alpha_r,\ \beta_r,\ \ldots,\ \alpha_r^{n-1}\beta_r^{2m-1}\,|\,.$$

If in this identity we put $a = \alpha_1$, $b = \beta_1$, we have

$$\operatorname*{Lt}_{a=\alpha_1,\ b=\beta_1} F(a, b, \alpha_1, \beta_1)\,\omega_1 = -\sum_{r=2}^{r=2mn+1} F(\alpha_1, \beta_1, \alpha_r, \beta_r)\,\omega_r,$$

and similar results when α_1, β_1 are replaced by α_s, β_s.

Similarly, taking the corresponding function $F(x, y, a, b)$, which is also determined by $2mn$ values of x, y, we shall have the identity

$$\sum_{r=1}^{r=2mn+1} F(\alpha_r, \beta_r, a, b)\,\omega_r' = 0,$$

where ω_r' is the co-factor of $F(\alpha_r, \beta_r, a, b)$ in the corresponding determinant whose r-th row is

$$|\,F(\alpha_r, \beta_r, a, b),\ 1,\ \alpha_r,\ \beta_r,\ \alpha_r^2,\ \ldots,\ \alpha_r^{2n-1}\beta_r^{m-1}\,|\,.$$

On putting $a = \alpha_s$, $b = \beta_s$ in this, we get again a result similar to that already obtained.

27. Thus, if instead of the determinant whose elements are $F(\alpha_r, \beta_r, \alpha_s, \beta_s)$, we take the equivalent ones whose elements are

(i.) $\omega_r F(\alpha_r, \beta_r, \alpha_s, \beta_s)$, (ii.) $\omega_s' F(\alpha_r, \beta_r, \alpha_s, \beta_s)$, (iii.) $\omega_r \omega_s' F(\alpha_r, \beta_r, \alpha_s, \beta_s)$,

and denote any of these three expressions by $-(r, s)$, where r is the column number and s the row number, we have for the elements of the principal diagonal of the resulting determinants in the three cases the expressions

(i.) $\Sigma(s, 1)$, $\Sigma(s, 2)$, ...,

(ii.) $\Sigma(1, s)$, $\Sigma(2, s)$, ...,

(iii.) either of these two forms indifferently.

Thus for three quantics ϕ, ψ, χ of the form

$$\sum_{r=0}^{r=m} \sum_{s=0}^{s=n} a_{rs} x^r y^s,$$

we may, by taking $2mn+1$ sets of arbitrary quantities α_1, β_1; α_2, β_2; ..., obtain the eliminant as the sum of $(2mn+1)^{2mn-1}$ terms, each term being the product of $2mn$ factors (r, s), where (r, s) has any one of the three values just given. In all three cases there will be apparent symmetry with respect to $2mn$ of the sets of quantities α, β, and in case (iii.) there will be symmetry with respect to all of them, but in this case the symmetry is not necessarily apparent, on account of the identical relations between the (r, s).

28. The results of § 10 and § 17 (i.) in which determinants, all of whose elements are $F(a, b, \alpha, \beta)$, or determinants whose elements make up the complete array of the coefficients in the expansion of $F(a, b, \alpha, \beta)$, have been obtained for the eliminants of quantics of the form

$$\Sigma A_{rs} x^r y^s \quad (r \leqslant n,\ s \leqslant m),$$

suggest the investigation of the value of the corresponding determinants of orders $2n^2-n$ or $\frac{1}{2}n(3n-1)$, (§ 2), which can be formed for three quantics of degree n of the ordinary standard form. The result is curious; except when $n = 2$, they vanish identically.

To prove this I suppose the determinant whose elements are the coefficients of $F(x, y, a, b)$ arranged in rows and columns as in the examples, pp. 56, 57, and 60.

Then, taking the general form of $F(x, y, a, b)$, viz.,

$$|\ \phi(x, y),\ \lambda\phi(x, b)+\mu\phi(a, y),\ \phi(a, b)\ |/(x-a)(y-b),$$

the coefficients of x^{2n-2}, $x^{2n-3}y$, $x^{n-1}y^{n-1}$ in $F(x, y, a, b)$ are easily found to be

$$x^{2n-2} \ldots \lambda\,|A_{n0},\ A_{n-1\,1},\ \phi(a, b)|,$$

$$x^{2n-3}y \ldots \lambda\,|A_{n0},\ A_{n-2\,2},\ \phi(a, b)|,$$

$$x^{n-1}y^{n-1} \ldots (\lambda-\mu)\,|A_{n0},\ A_{0n},\ \phi(a, b)|,$$

and therefore, from the three corresponding columns of the determinant we may take out the factor

$$|(B_{n0}, C_{n-1\,1}),\ (B_{n0}, C_{n-2\,2}),\ (B_{n0}, C_{0n})|,$$

which is identically zero.

A similar result will follow, if we consider the coefficients of y^{2n-2}, $y^{2n-3}x$, so that Δ has a factor which is identically zero, for all constant values of λ and μ.

29. In the case of three quadratics, these conclusions are not valid, since $x^{2n-3}y$ is the same as $x^{n-1}y^{n-1}$, and in this case I find that the determinant of the fifth order whose elements are the coefficients in the expansion of

$$|\phi(a, b),\ \phi(a, b),\ \phi(a, \beta)|/(a-\alpha)(b-\beta),$$

gives the eliminant multiplied by (A_{00}, B_{02}, C_{20}); and that the symmetrical determinant of the sixth order whose elements are the coefficients in

$$|\phi(a, b),\ \phi(a, b)-\phi(a, \beta),\ \phi(a, \beta)|/(a-\alpha)(b-\beta),$$

gives the eliminant multiplied by the square of (A_{00}, B_{02}, C_{20}).

All the terms of these two determinants can be written down from the table on pp. 56, 57.

30. I wish now to consider some theorems as to the common roots of two quantics, these theorems being obtained by taking the determinant whose elements are $F(a_r, b_r, a_s, \beta_s)$, which I will call Δ, and making therein various special determinations of the arbitrary quantities (a, b) and (α, β), in particular by supposing that all or some of these arbitrary quantities are the common roots of two of the three equations $\phi = 0$, $\chi = 0$, $\psi = 0$.

I consider in the first place quantics of the form

$$\Sigma A_{rs}x^r y^s \quad (r < n,\ s < m),$$

and take the result given in § 18, viz.,

$$\Delta = EDD',$$

where E is the pure eliminant, not containing the arbitrary quantities (a, b) and (α, β), found in § 10, and D, D' are respectively the determinants

$$|1,\ a_r,\ b_r,\ a_r^2,\ \ldots,\ a_r^{2n-1}b_r^{m-1}|,$$

and

$$|1,\ \alpha_r,\ \beta_r,\ \alpha_r^2,\ \ldots,\ \alpha_r^{n-1}\beta_r^{2m-1}|.$$

Certain preliminary investigations must first be made.

31. *The weight of the eliminant E.*

The weight of E can be conveniently determined by the help of the equation just given.

Consider first the weight with respect to z, so that the weight of any coefficient A_{rs} in $\Sigma A_{rs}x^r y^s$ is $m+n-(r+s)$, and the quantic may be written in homogeneous variables $\Sigma A_{rs}x^r y^s z^{m+n-r-s}$.

If, then, we write $a_r = za_r$, $b_r = zb_r$, ..., for all values of a_r, b_r, a_s, β_s, we see that

$$F(a_r, b_r, a_s, \beta_s) = (\phi(a_r, b_r), \chi(a_r, \beta_s), \psi(a_s, \beta_s))/(a_r-a_s)(b_r-\beta_s),$$

is multiplied by $z^{3(m+n)-2}$.

Also D and D' are seen to be multiplied by z^κ, where κ has the values

$$m \cdot \tfrac{1}{2}\, 2n\,(2n-1)+2n \cdot \tfrac{1}{2} m\,(m-1) \quad \text{and} \quad n \cdot \tfrac{1}{2}\, 2m\,(2m-1)+2m \cdot \tfrac{1}{2} n\,(n-1),$$

respectively.

Thus the weight of E must be

$$2mn\,(3\,(m+n)-2)-mn\,(2m+n-2)-mn\,(m+2n-2),$$

that is,
$$3mn\,(m+n).$$

Again, the weight with regard to x may be found by multiplying A_{rs} by λ^r, and writing a_r/λ for a_r, ..., when F takes the factor λ, and D and D' the factor $\lambda^{-\kappa}$, where κ has the values $mn\,(2n-1)$ and $mn(n-1)$, respectively, so that the weight of E with regard to x is $3mn^2$, and similarly with regard to y is $3m^2n$.

32. We are now in a position to express E in terms of the $2mn$ common roots of two of the equations, say $\phi = 0$ and $\chi = 0$. For, if x'_r, y'_r is one of the $2mn$ intersections of $\phi = 0$ and $\chi = 0$, which are left when the m^2+n^2 points at infinity on the axes are excluded, $E = 0$ must be equivalent to

$$\Pi\psi\,(x'_r, y'_r) = 0.$$

But $\Pi\psi\,(x'_r, y'_r)$ is of weight $2mn\,(m+n)$ with regard to z, and of weight $2mn^2$ with regard to x, so that E and $\Pi\psi\,(x'_r, y'_r)$ are not identical. Also $\Pi\psi\,(x'_r, y'_r)$ is a symmetric function of the roots of the two equations $X = 0$ and $Y = 0$, got by eliminating y or x from ϕ and χ, and the term of the highest degree in the roots will be

$$C_{nm}^{2mn}\,[\Pi x'_r]^n\,[\Pi y'_r]^m,$$

C_{nm} being the coefficient of $x^n y^m$ in ψ.

The equation $X = 0$ is the eliminant of

$$\begin{aligned} &y^m\,(A_{n\,m}\,x^n + A_{n-1\,m}\,x^{n-1} + \ldots) \\ &+ y^{m-1}\,(A_{n\,m-1}\,x^n + A_{n-1\,m-1}\,x^{n-1} + \ldots) \\ &+ \ldots = 0, \end{aligned}$$

and a similar equation with B for A ; so that the coefficient of the highest power of x in $X = 0$, viz., x^{2mn}, will be the eliminant of the two equations

$$A_{n\,m}\,y^m + A_{n\,m-1}\,y^{m-1} + \ldots = 0,$$
$$B_{n\,m}\,y^m + B_{n\,m-1}\,y^{m-1} + \ldots = 0.$$

If we call this eliminant N, and M the corresponding eliminant of

$$A_{n\,m}\,x^n + A_{n-1\,m}\,x^{n-1} + \ldots = 0,$$
$$B_{n\,m}\,x^n + B_{n-1\,m}\,x^{n-1} + \ldots = 0,$$

it is obvious that $\Pi\psi\,(x_r', y_r')$ has a denominator $M^m N^n$. Now the weight of M, with regard to z, is n^2 and of N is m^2, so that $M^m N^n$, whose weight is $mn(m+n)$ is the factor by which we must multiply $\Pi\psi(x_r', y_r')$ in order to get E, and we have

$$E = M^m N^n \Pi\psi\,(x_r', y_r').$$

The formula analogous to this for two quantics in one variable is

$$R = a_0^n \Pi\psi(x_r'),$$

where R is the eliminant of two quantics

$$\phi \equiv a_0 x^n + \ldots, \quad \psi \equiv b_0 x^n + \ldots,$$

and x_r' is a root of $\phi = 0$.

33. From this investigation may be derived a result analogous to the theorem that if $\theta(x) \equiv a_0 x^n + \ldots = 0$, an equation in one variable, has the n roots $\alpha_1, \alpha_2, \ldots, \alpha_n$, $\prod_{r=1}^{r=n} \theta'(\alpha_r)$ is equal to a_0^n times the square of the determinant whose r-th row is

$$|\,1,\ \alpha_r,\ \alpha_r^2,\ \alpha_r^3,\ \ldots,\ \alpha_r^{n-1}\,|.$$

The analogous theorem is:—

If $\quad \phi(x, y) \equiv \Sigma A_{rs} x^r y^s = 0, \quad \chi(x, y) \equiv \Sigma B_{rs} x^r y^s = 0$

$$(r \not> n,\ s \not> m),$$

have the $2mn$ common roots α_1, β_1 ; α_2, β_2 ; ...,

$$\prod_{r=1}^{r=2mn} \begin{vmatrix} \dfrac{\partial\phi(\alpha_r, \beta_r)}{\partial\alpha_r}, & \dfrac{\partial\phi(\alpha_r, \beta_r)}{\partial\beta_r} \\ \dfrac{\partial\chi(\alpha_r, \beta_r)}{\partial\alpha_r}, & \dfrac{\partial\chi(\alpha_r, \beta_r)}{\partial\beta_r} \end{vmatrix}$$

is equal to $M^m N^n$ times the product of the two determinants whose r-th

rows are $$|\,1,\ \alpha_r,\ \beta_r,\ \ldots,\ \alpha_r^{2n-1}\beta_r^{m-1}\,|$$

and $$|\,1,\ \alpha_r,\ \beta_r,\ \ldots,\ \alpha_r^{n-1}\beta_r^{2m-1}|,$$

where M is the eliminant of the coefficients of y^m in ϕ and χ, and N is the eliminant of the coefficients of x^n.

For it has been shown that, taking arbitrary values of α_r, β_r, EDD' is equal to Δ, the determinant whose elements are $F(\alpha_r, \beta_r, \alpha_s, \beta_s)$, and further that E in this relation is expressed in a form independent of any α, β as a function of the coefficients of ϕ, ψ, χ only.

But, if α_r, β_r; α_s, β_s are common roots of $\phi(x, y) = 0$ and $\chi(x, y) = 0$, it is obvious that

$$F(\alpha_r, \beta_r, \alpha_s, \beta_s) \equiv (\phi(\alpha_r, \beta_r),\ \chi(\alpha_r, \beta_s),\ \psi(\alpha_s, \beta_s))/(\alpha_r - \alpha_s)(\beta_r - \beta_s),$$

will vanish when α_r, β_r and α_s, β_s are different, but that when $\alpha_r = \alpha_s$, $\beta_r = \beta_s$, we get, as in § 26,

$$F(\alpha_r, \beta_r, \alpha_r, \beta_r) = \left(\phi(\alpha_r, \beta_r),\ \frac{\partial\chi(\alpha_r, \beta_r)}{\partial\beta_r},\ \frac{\partial\psi(\alpha_r, \beta_r)}{\partial\alpha_r}\right)$$

$$= \psi(\alpha_r, \beta_r) \begin{vmatrix} \dfrac{\partial\phi(\alpha_r, \beta_r)}{\partial\beta_r}, & \dfrac{\partial\chi(\alpha_r, \beta_r)}{\partial\beta_r} \\ \dfrac{\partial\phi(\alpha_r, \beta_r)}{\partial\alpha_r}, & \dfrac{\partial\chi(\alpha_r, \beta_r)}{\partial\alpha_r} \end{vmatrix},$$

so that EDD' is equal to the product of the values of the above expression for the $2mn$ values of r.

But $\Pi\psi(\alpha_r, \beta_r)$ has been shown to be E/M^mN^n, so that, disregarding a possible numerical factor, we have the theorem required.

34. This theorem may be verified for a particular case by taking

$$\phi(x, y) \equiv \phi_1(x)\,\phi_2(y) \equiv \Pi(x - \lambda_r)\,\Pi(y - \mu_r),$$

$$\chi(x, y) = \chi_1(x)\chi_2(y) = \Pi(x - \rho_r)\,\Pi(y - \sigma_r),$$

the common roots of which are λ, σ and μ, ρ, λ_r occurring n times, once with each σ, and so on.

For $$\frac{\partial\phi(\lambda, \sigma)}{\partial\lambda} = \phi_1'(\lambda)\,\phi_2(\sigma), \quad \frac{\partial\chi(\lambda, \sigma)}{\partial\lambda} = 0,$$

$$\frac{\partial\phi(\lambda, \sigma)}{\partial\sigma} = 0, \quad \frac{\partial\chi(\lambda, \sigma)}{\partial\sigma} = \chi_1(\lambda)\,\chi_2'(\sigma),$$

so that the left-hand side of the relation to be verified becomes

$$[\Pi\phi_1'(\lambda)\,\Pi\phi_2(\sigma)\,\Pi\chi_1'(\rho)\,\Pi\chi_2(\mu)]^n\,[\Pi\phi_2'(\mu)\,\Pi\phi_1(\rho)\,\Pi\chi_2'(\sigma)\,\Pi\chi_1(\lambda)]^m.$$

Also N is $\Pi\phi_2(\sigma)$ or $\Pi\chi_2(\mu)$; M is $\Pi\phi_1(\rho)$ or $\Pi\chi_1(\lambda)$; D is

$$\Pi(\lambda_r-\lambda_s)\,\Pi(\mu_r-\mu_s)\,\Pi(\rho_r-\rho_s)\,\Pi(\sigma_r-\sigma_s)\,\Pi(\lambda-\rho);$$

D' is $$\Pi(\lambda_r-\lambda_s)\,\Pi(\mu_r-\mu_s)\,\Pi(\rho_r-\rho_s)\,\Pi(\sigma_r-\sigma_s)\,\Pi(\mu-\sigma),$$

so that the theorem is exact and the two sides of the relation differ at most in sign.

35. We may deduce other theorems by supposing that in the relation $\Delta = EDD'$, the sets of quantities a, b remain arbitrary, whilst the set α, β are the common roots of $\phi = 0$ and $\chi = 0$. Then, as before, $\Pi\psi(a_r, \beta_r)$ can be taken out as a factor of Δ, and the determinant whose elements are

$$\Theta(a_r, b_r, \alpha_s, \beta_s) \equiv (\phi(a_r, \beta_s),\ \chi(a_r, b_r))\,/\,(a_r-\alpha_s)(b_r-\beta_s),$$

is equal to M^mN^n times the product of the two determinants whose r-th rows are

$$|\,1,\ a_r,\ b_r,\ a_r^2,\ a_rb_r,\ \ldots,\ a_r^{2n-1}b_r^{m-1}\,|,$$

and

$$|\,1,\ \beta_r,\ \alpha_r,\ \beta_r^2,\ \beta_r\alpha_r,\ \ldots,\ \beta_r^{2m-1}\alpha_r^{n-1}\,|.$$

But since $\Theta(a_r, b_r, \alpha_s, \beta_s)$ is a function of degree $2n-1$ in a_r, and $m-1$ in b_r, we may write a_r+a for a_r, and b_r+b for b_r, and expanding by Taylor's theorem, put

$$\Theta(a_r+a,\ b_r+b,\ \alpha_s,\ \beta_s) = \Sigma a_r^h b_r^k \frac{1}{h!\,k!}\frac{\partial^{h+k}}{\partial a^h\,\partial b^k}\Theta_s\ \ (h<2n,\ k<m);$$

where Θ_s is written for $\Theta(a, b, \alpha_s, \beta_s)$—$a$, b being unchanged for all values of s—so that, applying the rule for the multiplication of determinants, exactly as in I., § 7, p. 475, we may take out the factor

$$|\,1,\ a_r,\ b_r,\ a_r^2,\ a_rb_r,\ \ldots,\ a_r^{2n-1}b_r^{m-1}\,|,$$

from the left-hand side.

This gives the result that the determinant

$$|\,1,\ \beta_s,\ \alpha_s,\ \beta_s^2,\ \beta_s\alpha_s,\ \ldots,\ \beta_s^{2m-1}\alpha_s^{n-1}|,$$

multiplied by M^mN^n, is equal to

$$\left|\Theta_s,\ \frac{\partial\Theta_s}{\partial a},\ \frac{\partial\Theta_s}{\partial b},\ \frac{1}{2!}\frac{\partial^2\Theta_s}{\partial a^2},\ \frac{\partial^2\Theta_s}{\partial a\,\partial b},\ \ldots,\ \frac{1}{(2n-1)!\,(m-1)!}\frac{\partial^{2n+m-2}\Theta_s}{\partial a^{2n-1}\partial b^{m-1}}\right|.$$

36. To obtain corresponding theorems for quantics of the ordinary standard form, that is, theorems concerning the n^2 intersections of two curves ϕ and χ of the n-th degree, consider the determinant Δ', given in § 17 (ii.), $\theta_r(x, y)$ being taken to have the $\frac{1}{2}n(n-1)$ different values

$$x^h y^k \quad (h+k \not> n-2).$$

In this case we have (cf. § 18)

$$\Delta' = DD'E,$$

where E is the pure eliminant as found in §§ 4, 5, 6, D is the determinant of order $\frac{1}{2}n(n+1)$,

$$|\, 1,\ a_r,\ b_r,\ \ldots,\ a_r^{n-1},\ a_r^{n-2}b_r,\ \ldots,\ b_r^{n-1}\,|,$$

and D' that of order $2n^2-n$,

$$|\, 1,\ a_r,\ \beta_r,\ \ldots,\ a_r^{2n-2},\ a_r^{2n-3}\beta_r,\ \ldots,\ \beta_r^{2n-2}\,|.$$

The constituents of Δ' are of four different types, and using (r, s) to denote the element in the r-th row and s-th column of Δ', we may take

$$(r, s) = (\phi(a_r, b_r),\ \chi(a_r, \beta_s),\ \psi(a_s, \beta_s))/(a_r-a_s)(b_r-\beta_s)$$
$$[\text{when } r \not> \tfrac{1}{2}n(n+1)];$$

but

$$(r, s) = a_s^h \beta_s^k \phi(a_s, \beta_s) \quad [\tfrac{1}{2}n(n+1) < r \not> n^2],$$
$$(r, s) = a_s^h \beta_s^k \chi(a_s, \beta_s) \quad [n^2 < r \not> \tfrac{1}{2}n(3n-1)],$$
$$(r, s) = a_s^h \beta_s^k \psi(a_s, \beta_s) \quad [\tfrac{1}{2}n(3n-1) < r \not> 2n^2-n],$$

so that, when we put $a_t = a_t$, $b_t = \beta_t$, and take a_t, β_t $(t \not> n^2)$ as the common roots of χ and ψ; and also, to avoid confusion, change the notation for the remaining values of a, β, and write $a_t = \rho_{t'}$, $\beta_t = \sigma_{t'}$, where $t = n^2+t'$, the determinant Δ' appears as the product of the three separate parts

(i.) $$\prod_{r=1}^{r=\frac{1}{2}n(n+1)} \phi(a_r, \beta_r) \begin{vmatrix} \dfrac{\partial\chi(a_r, \beta_r)}{\partial a_r}, & \dfrac{\partial\psi(a_r, \beta_r)}{\partial a_r} \\ \dfrac{\partial\chi(a_r, \beta_r)}{\partial \beta_r}, & \dfrac{\partial\psi(a_r, \beta_r)}{\partial \beta_r} \end{vmatrix}.$$

(ii.) $\prod_{r=\frac{1}{2}n(n+1)+1}^{r=n^2} \phi(a_r, \beta_r)$ multiplied by D_1, where D_1 is the determinant of order $\frac{1}{2}n(n-1)$,

$$|\, 1,\ a_r,\ \beta_r,\ a_r^2,\ \ldots,\ a_r^{n-2},\ a_r^{n-3}\beta_r,\ \ldots,\ \beta_r^{n-2}\,|,$$

and $$\tfrac{1}{2}n(n+1) < r \not> n^2.$$

(iii.) A determinant D_2 of order $n(n-1)$, of which half the rows consist of elements of the form $\rho_s^h \sigma_s^k \chi(\rho_s, \sigma_s)$, and the other half of elements of the form $\rho_s^h \sigma_s^k \psi(\rho_s, \sigma_s)$.

Then writing χ_r and ψ_r for $\chi(\alpha_r, \beta_r)$ and $\psi(\alpha_r, \beta_r)$ the relation $\Delta' = DD'E$ becomes

$$D_1 D_2 \prod_{r=1}^{r=n^2} \phi(\alpha_r, \beta_r) \prod_{r=1}^{r=\frac{1}{2}n(n+1)} \frac{\partial(\chi_r, \psi_r)}{\partial(\alpha_r, \beta_r)} = DD'E.$$

But
$$E = R^n \Pi\phi(\alpha_r, \beta_r),$$

where R is the eliminant of the terms of the n-th degree in ψ and χ, so that

$$D_1 D_2 \prod_{r=1}^{r=\frac{1}{2}n(n+1)} \frac{\partial(\chi_r, \psi_r)}{\partial(\alpha_r, \beta_r)} = DD'R^n, \qquad (A)$$

where D is the determinant of order $\frac{1}{2}n(n+1)$,

$$| 1, \alpha_r, \beta_r, \alpha_r^2, \ldots \alpha_r^{n-1}, \alpha_r^{n-2}\beta_r, \ldots, \beta_r^{n-1} |,$$

in which
$$r \not> \tfrac{1}{2}n(n+1),$$

and D' that of order $2n^2-n$, in which n^2 rows contain α, β, and $n(n-1)$ contain ρ, σ.*

37. This formula is a very general one, since ρ, σ are arbitrary, the simplest deduction from it would seem to be that which is obtained by equating to one another the coefficients, on each side, of the determinant (of order n^2-n) whose elements are $\rho^h\sigma^k$, where either h or k is greater than $n-1$.

The coefficient of this in D_2, which I will call H, will be found to be a function of the coefficients of terms of the n-th degree only, of the quantics ψ and χ, and to consist of the product of determinants of orders 2, 4, 6, ..., $2(n-1)$, respectively, the first two of the series being

$$\begin{vmatrix} B_{n0}, & B_{0n} \\ C_{n0}, & C_{0n} \end{vmatrix} \quad \text{and} \quad \begin{vmatrix} B_{n0}, & B_{n-11}, & B_{0n}, & 0 \\ C_{n0}, & C_{n-11}, & C_{0n}, & 0 \\ 0, & B_{n0}, & B_{1n-1}, & B_{0n} \\ 0, & C_{n0}, & C_{1n-1}, & C_{0n} \end{vmatrix},$$

* In this formula, and in the analogous formulæ which follow, the n^2 roots (α, β) are divided into two sets; those which occur in $\Pi \frac{\partial(\chi_r, \psi_r)}{\partial(\alpha_r, \beta_r)}$ and in D are one and the same set, those in D_1 are the complementary set, whilst all occur in D'.

whilst in D' the coefficient will be the determinant of order n^2 whose rows consist of the terms of

$$\Sigma\Sigma\, a_r^h \beta_r^k \quad (k < n,\ h < n).$$

Calling this determinant T, I get

$$HD_1 \prod_{r=1}^{r=\frac{1}{2}n(n+1)} \frac{\partial(\chi_r, \psi_r)}{\partial(a_r, \beta_r)} = DTR^n, \tag{B}$$

As a verification I notice that giving to each a and β the weight one, the weights of the two sides of this equation are the same. For T is of weight $n^2(n-1)$, D of weight $\frac{1}{3}(n-1)\,n(n+1)$, D_1 of weight $\frac{1}{3}(n-2)(n-1)\,n$ and $\dfrac{\partial(\chi, \psi)}{\partial(a, \beta)}$ of weight $2(n-1)$.

38. But again I might have applied the same process of reasoning to the determinant of order $2n^2+n$ (*vide* § 8, p. 58), which differs from Δ' in having $\frac{1}{2}n(n-1)$ rows, instead of $\frac{1}{2}n(n+1)$, whose elements are $F(a_r, b_r, a_s, \beta_s)$; and $\frac{1}{2}n(n+1)$ rows, instead of $\frac{1}{2}n(n-1)$, whose elements are $a_s^h \beta_s^k \phi(a_s, \beta_s)$, ...

In this way I should get a relation

$$hd_1 \prod_{r=1}^{r=\frac{1}{2}n(n-1)} \frac{\partial(\chi_r, \psi_r)}{\partial(a_r, \beta_r)} = dTR^n, \tag{C}$$

where d_1 corresponds to D_1, but is of order $\frac{1}{2}n(n+1)$, and d to D, but is of order $\frac{1}{2}n(n-1)$, whilst h corresponds to H, and is, in fact, the product of H by the next determinant of the series. But since no order has been assigned to the common roots a_r, β_r, we may take the two sets which occur in these two formulæ, in number $\frac{1}{2}n(n+1)$ and $\frac{1}{2}n(n-1)$ respectively, to be complementary to one another, so that taken together they make up the n^2 common roots.

But in this case $D = d_1$, and $D_1 = d$, so that multiplying the two results together we have*

$$Hh \prod_{r=1}^{r=n^2} \frac{\partial(\chi_r, \psi_r)}{\partial(a_r, \beta_r)} = T^2R^{2n}; \tag{D}$$

and dividing one by the other

$$\prod_{r=1}^{r=\frac{1}{2}n(n+1)} \frac{\partial(\chi_r, \psi_r)}{\partial(a_r, \beta_r)} \div \prod_{r=1+\frac{1}{2}n(n+1)}^{r=n^2} \frac{\partial(\chi_r, \psi_r)}{\partial(a_r, \beta_r)} = \frac{D^2}{D_1^2} \cdot \frac{h}{H}.$$

* Thus T^2 is an expression for the tact-invariant or osculant (Sylvester). Cf. Salmon, *Higher Algebra*, p. 171 (4th ed.).

39. Many other theorems can be deduced from (B) and (C). For instance, in (B) we may change a root (α_r, β_r) which occurs in D for any other (α_s, β_s) which occurs in D_1, so that isolating two roots (α_r, β_r) and (α_s, β_s), and dividing the other n^2-2 into two sets, denoted by $[\frac{1}{2}n(n+1)-1]$ and $[\frac{1}{2}n(n-1)-1]$, respectively, we get on division a theorem which may be written

$$\frac{\partial(\chi_r, \psi_r)}{\partial(\alpha_r, \beta_r)} \div \frac{\partial(\chi_s, \psi_s)}{\partial(\alpha_s, \beta_s)} = \frac{D[r, [\frac{1}{2}n(n+1)-1]]}{D[s, [\frac{1}{2}n(n+1)-1]]} \frac{D_1[r, [\frac{1}{2}n(n-1)-1]]}{D_1[s, [\frac{1}{2}n(n-1)-1]]},$$

where $D[r, [\frac{1}{2}n(n+1)-1]]$ is used to denote the determinant of order $\frac{1}{2}n(n+1)$ whose rows are

$$|\ 1,\ \alpha,\ \beta,\ \ldots,\ \alpha^{n-1},\ \alpha^{n-2}\beta,\ \ldots,\ \beta^{n-1}\ |,$$

the roots that occur being α_r, β_r and the set $[\frac{1}{2}n(n+1)-1]$, and $D_1[r, [\frac{1}{2}n(n-1)-1]]$ a similar determinant of order $\frac{1}{2}n(n-1)$.

Again, suppose that the $\frac{1}{2}n(n-1)$ roots which occur in d in (C) also occur in D in (B). Then denoting a set of n roots by $[n]$, and dividing the remaining n^2-n into two sets denoted by $[\frac{1}{2}n(n-1)]$ and $(\frac{1}{2}n(n-1))$, we get, on division,

$$\Pi_{[n]} \frac{\partial(\chi, \psi)}{\partial(\alpha, \beta)} = \frac{h}{H} \frac{D[[n], [\frac{1}{2}n(n-1)]]}{D_1[(\frac{1}{2}n(n-1))]} \frac{D[[n], (\frac{1}{2}n(n-1))]}{D_1[[\frac{1}{2}n(n-1)]]}.$$

[*Added March 15th.*]

40. Formulæ similar to (B) and (C) can be obtained concerning sets of common roots of two equations which are not of the same degree.

Take ϕ of degree n, ψ of degree $n+p$, χ of degree n. Then it has been shown in § 3,* that the eliminant may be obtained by replacing ψ by $\psi - a\chi$, where in $\psi - a\chi$ the highest power of x which occurs is x^{n-1}.

But this substitution will not affect the common roots of ψ and χ, or the value of $\frac{\partial(\psi_r, \chi_r)}{\partial(\alpha_r, \beta_r)}$, when (α_r, β_r) is a common root of ψ and χ, so that in the investigation I may assume that ψ does not contain x to a higher power than $n-1$.

On this assumption, following the reasoning of § 36, I deduce from the relation

$$\Delta' = DD'E,$$

* See Corrigenda at the end of this paper, p. 492.

the relation $D_1 D_2 \prod_{r=1}^{r=n(n+p)} \phi(\alpha_r, \beta_r) \prod_{r=1}^{r=\frac{1}{2}n(n+1)} \frac{\partial(\chi_r, \psi_r)}{\partial(\alpha_r, \beta_r)} = DD'E,$

where now D_1 is the determinant of order $\frac{1}{2}n(n-1)+np$,

$$|\, 1,\ \alpha_r,\ \beta_r,\ \alpha_r^2,\ \ldots,\ \alpha_r^{n-1}\beta_r^{p-1},\ \ldots,\ \beta_r^{n+p-2}\,|\,,$$

in which $$\tfrac{1}{2}n(n+1) < r \not> n^2+np,$$

and the terms which occur in the rows of the determinant are those of a quantic of degree $n+p-2$ in which x^{n-1} is the highest power of x which occurs; D_2 is of order $n(n-1)+np$, and $\frac{1}{2}n(n-1)$ of the rows consist of elements of the form $$\rho_s^h \sigma_s^k \psi(\rho_s, \sigma_s) \quad [h+k < n-1],$$

and $\frac{1}{2}n(n-1)+np$ of elements of the form

$$\rho_s^h \sigma_s^k \chi(\rho_s \sigma_s) \quad [h+k < n+p-1,\ h < n];$$

D is the same determinant as before

$$|\, 1,\ \alpha_r,\ \beta_r,\ \alpha_r^2,\ \ldots,\ \alpha_r^{n-1},\ \alpha_r^{n-2}\beta_r,\ \ldots,\ \beta_r^{n-1}\,|\,,$$

in which $$r \not> \tfrac{1}{2}n(n+1);$$

and D' is the determinant of order $2n^2-n+2np$, in which n^2+np rows contain α, β, and $n(n-1)+np$ contain ρ, σ, the terms which occur being those of a quantic of degree $2n+p-2$, the highest power of x which occurs being x^{2n-1}.

But now, if $$\psi(x, y) = \Sigma C_{rs} x^r y^s \quad (r+s < n+p+1,\ r < n),$$

and $$\chi(x, y) = \Sigma B_{rs} x^r y^s \quad (r+s < n+1);$$

we have $$E = R'^n \Pi\phi(\alpha_r, \beta_r),$$

where R' is the eliminant of the terms of highest degree in ψ and χ, so that

$$D_1 D_2 \prod_{r=1}^{r=\frac{1}{2}n(n+1)} \frac{\partial(\chi_r, \psi_r)}{\partial(\alpha_r, \beta_r)} = DD'R'^n. \qquad \text{(E)}$$

In this equation we may, just as before, equate the coefficients, on each side, of the determinant of order n^2-n+np whose elements are $\rho^h\sigma^k$, where either $h > n-1$ or $k > n+p-1$. The coefficient of this in D_2 will be a function analogous to H of § 37, which I will call H', and in D' will be a determinant whose constituents are

$$\alpha_r^h \beta_r^k \quad (h < n,\ k < n+p),$$

so that, calling this determinant T', I get

$$H'D_1 \prod_{r=1}^{r=\frac{1}{2}n(n+1)} \frac{\partial(\chi_r, \psi_r)}{\partial(\alpha_r, \beta_r)} = DT'R'^n. \tag{F}$$

This process also might have been applied to the determinant of order $2n^2+n+2np$ obtained by methods of § 8,* and we should obtain a relation

$$h'd_1 \prod_{r=1}^{r=\frac{1}{2}n(n-1)} \frac{\partial(\chi_r, \psi_r)}{\partial(\alpha_r, \beta_r)} = dT'R'^n, \tag{G}$$

where d_1 is $\quad |\, 1,\ \alpha_r,\ \beta_r,\ \alpha_r^2,\ \ldots,\ \alpha_r^{n-1}\beta_r^p,\ \ldots,\ \beta_r^{n+p-1} \,|,$

the highest power of α_r being α_r^{n-1}, and d is

$$|\, 1,\ \alpha_r,\ \beta_r,\ \alpha_r^2,\ \ldots,\ \alpha_r^{n-2},\ \alpha_r^{n-3}\beta_r,\ \ldots,\ \beta_r^{n-2} \,|.$$

Taking the two sets of roots in these two formulæ (F) and (G) as mutually exclusive, we have, on multiplication,

$$H'h' \prod_{r=1}^{r=n^2} \frac{\partial(\chi_r, \psi_r)}{\partial(\alpha_r, \beta_r)} = \frac{dD}{d_1 D_1} T'^2 R'^{2n}, \tag{H}$$

where on the left-hand side (α_r, β_r) is any one of a set of n^2 roots out of the $n(n+p)$ roots of ψ and χ and

$$\psi - a\chi = \Sigma C_{rs} x^r y^s \quad (r+s < n+p+1,\ r < n).$$

41. This investigation may also be made to yield an expression for the eliminant of three quantics in terms of the common roots of two pairs of the quantics.

Take, for example, ϕ, ψ, χ all of degree n of the usual standard form.

Then the formulæ (A) of § 36, and (B) of § 37, are

$$D_1 D_2 \prod_{r=1}^{r=\frac{1}{2}n(n+1)} \frac{\partial(\chi_r, \psi_r)}{\partial(\alpha_r, \beta_r)} = DD'R^n, \tag{A}$$

$$HD_1 \prod_{r=1}^{r=\frac{1}{2}n(n+1)} \frac{\partial(\chi_r, \psi_r)}{\partial(\alpha_r, \beta_r)} = DTR^n, \tag{B}$$

---

* If in accordance with § 8 we take $\xi = \frac{1}{2}n(n-1)$, we have, in the notation used in § 3,

$$\eta_1 = \tfrac{1}{2}(n+p+q)(n+p+q+1) - \tfrac{1}{2}p(p+1) - \tfrac{1}{2}q(q+1),$$
$$\eta_2 = \tfrac{1}{2}(n+q)(n+q+1) - \tfrac{1}{2}q(q+1),$$
$$\eta_3 = \tfrac{1}{2}(n+p)(n+p+1) - \tfrac{1}{2}p(p+1),$$

so that $\quad \xi + \eta_1 + \eta_2 + \eta_3 = \tfrac{1}{2}(2n+p+q)(2n+p+q+1) - \tfrac{1}{2}p(p+1) - \tfrac{1}{2}q(q+1),$

and this when $q = 0$ is $2n^2 + n + 2np$.

where (α_r, β_r) is a common root of

$$\psi\,(\equiv \Sigma C_{rs} x^r y^s) \quad \text{and} \quad \chi\,(\equiv \Sigma B_{rs} x^r y^s).$$

Dividing (A) by (B), I get

$$D_2 T = D'H. \qquad \text{(K)}^*$$

In D_2, of order $n(n-1)$, half the rows are of the form $\rho_s^h \sigma_s^k \chi(\rho_s, \sigma_s)$, where h and k are the same for any row, and s is the column number, and the other half of the form $\rho_s^h \sigma_s^k \psi(\rho_s, \sigma_s)$.

Reintroduce the quantic ϕ, and let γ_r, δ_r be a common root of ϕ and χ.

Take $\frac{1}{2}n(n-1)$ of the arbitrary quantities (ρ, σ) to be equal to γ_s, δ_s. Then, since $\chi(\gamma_s, \delta_s) = 0$, D_2 splits up into

$$\prod_{r=1}^{r=\frac{1}{2}n(n-1)} \psi(\gamma_r, \delta_r) \prod_{s=1}^{s=\frac{1}{2}n(n-1)} \chi(\rho_s, \sigma_s)\, \Gamma P,$$

where Γ, P are the determinants of order $\frac{1}{2}n(n-1)$,

$$|\, 1, \gamma_r, \delta_r, \gamma_r^2, \ldots, \gamma_r^{n-2}, \gamma_r^{n-3}\delta_r, \ldots, \delta_r^{n-2}\,|,$$

and

$$|\, 1, \rho_s, \sigma_s, \rho_s^2, \ldots, \rho_s^{n-2}, \rho_s^{n-3}\sigma_s, \ldots, \sigma_s^{n-2}\,|.$$

Also D' is of order $2n^2-n$, and n^2 of the rows contain (α, β), $\frac{1}{2}n(n-1)$ contain (γ, δ), and $\frac{1}{2}n(n-1)$ contain (ρ, σ).

In the general formula thus obtained

$$\Gamma P T \prod_{r=1}^{r=\frac{1}{2}n(n-1)} \psi(\gamma_r, \delta_r) \prod_{s=1}^{s=\frac{1}{2}n(n-1)} \chi(\rho_s, \sigma_s) = D'H\,;$$

we may equate the coefficients of $P\Pi\rho_s^n$, and we have

$$\Gamma T B_{n0}^{\frac{1}{2}n(n-1)} \prod_{r=1}^{r=\frac{1}{2}n(n-1)} \psi(\gamma_r, \delta_r) = SH,$$

where S is of order $\frac{1}{2}n(3n-1)$, n^2 of the rows contain (α, β), $\frac{1}{2}n(n-1)$ contain (γ, δ), and the terms are those of a quantic of degree $2n-2$, in which x^{n-1} is the highest power that occurs.

---

* A formula more general than (K) is obtained by replacing (A) by the corresponding formula obtained by starting with Φ, ψ, χ, where Φ is any quantic of degree greater than n.

If n, the degree of ϕ, ψ, χ is odd, and we take Φ of degree $n+\frac{1}{2}(n+1)$, expressions for the eliminant symmetrical with respect to the sets of common roots of ϕ, ψ, χ can be obtained.

For instance, for three cubics, I have obtained the result that the determinant, of order twenty-seven, whose elements are the terms of the equation of a curve of the sixth degree, omitting x^6 or y^6, each row containing the coordinates of a point of intersection of a pair of cubics, is equal to $E^2TT'T''/HH'H'R^2R'^2R''^2$; where H, T, R are defined for a pair of cubics as in §§ 36, 37.

Or, again, equating the coefficients of P,

$$\Gamma T B_{00}^{\frac{1}{2}n(n-1)} \prod_{r=1}^{r=\frac{1}{2}n(n-1)} \psi(\gamma_r, \delta_r) = ZH,$$

where Z is a similar determinant, and the terms are those terms of a quantic of degree $2n-2$, which are of degree higher than $n-2$.

We may also obtain in the same way, from (C) and the corresponding relation,

$$\Gamma' T B_{n0}^{\frac{1}{2}n(n+1)} \prod_{r=1}^{r=\frac{1}{2}n(n+1)} \psi(\gamma_r, \delta_r) = S'h,$$

$$\Gamma' T B_{00}^{\frac{1}{2}n(n+1)} \prod_{r=1}^{r=\frac{1}{2}n(n+1)} \psi(\gamma_r, \delta_r) = Z'h,$$

where S' and Z' are of order $\frac{1}{2}n(3n+1)$, n^2 of the rows contain (α, β), $\frac{1}{2}n(n+1)$ contain (γ, δ), and the terms are those of a quantic of degree $2n-1$, omitting for S' those in which x^n occurs, and for Z' those of degree lower than n, whilst Γ' corresponds to Γ but is of order $\frac{1}{2}n(n+1)$.

But now, taking the sets of roots (γ, δ) in these two pairs of equations as mutually exclusive, and multiplying the corresponding expressions together, we may replace $\prod_{r=1}^{r=n^2} \psi(\gamma_r, \delta_r)$ by $E/[R(\phi, \chi)]^n$, which gives the following expressions for E in terms of the roots :—

$$E = SS'Hh[R(\phi, \chi)]^n / B_{n0}^{n^2} T^2 \Gamma\Gamma',$$

$$E = ZZ'Hh[R(\phi, \chi)]^n / B_{00}^{n^2} T^2 \Gamma\Gamma'.$$

We may also obtain an expression for E^2 in terms of the common roots of all the pairs of quantics.

Let (ϵ, ζ) denote a common root of ϕ and ψ. Take the original relation (K), and let us put, not only $\frac{1}{2}n(n-1)$ of the (ρ, σ) equal to (γ, δ), but also the other $\frac{1}{2}n(n-1)$ of the (ρ, σ) equal to (ϵ, ζ).

In this way we shall get a formula which may be written

$$E^2T^2/Hh[R(\phi, \chi)]^n[R(\phi, \psi)]^n$$

$$= \frac{\begin{matrix}\{n^2, (\alpha, \beta);\ \frac{1}{2}n(n-1), (\gamma, \delta);\ \frac{1}{2}n(n-1), (\epsilon, \zeta)\} \\ \times \{n^2, (\alpha, \beta);\ \frac{1}{2}n(n+1), (\gamma, \delta);\ \frac{1}{2}n(n+1), (\epsilon, \zeta)\}\end{matrix}}{\{\frac{1}{2}n(n-1), (\gamma, \delta)\}\{\frac{1}{2}n(n+1), (\gamma, \delta)\}\begin{matrix}\{\frac{1}{2}n(n-1), (\epsilon, \zeta)\} \\ \times \{\frac{1}{2}n(n+1), (\epsilon, \zeta)\}\end{matrix}},$$

the symbol $\{n^2, (\alpha, \beta);\ \frac{1}{2}n(n-1), (\gamma, \delta);\ \frac{1}{2}n(n-1), (\epsilon, \zeta)\}$, for example, being used to denote the determinant of order $2n^2-n$, n^2 of whose rows

contain (α, β), $\frac{1}{2}n(n-1)$, (γ, δ) and $\frac{1}{2}(n-1)$, (ϵ, ζ), the terms which occur being those of a general quantic of degree $2n-2$.

It is obvious that similar relations can be found for any three quantics of the standard type, of whatever degrees; and also for quantics of the type

$$\Sigma A_{rs} x^r y^s \quad (r < n+1,\ s < n+1),$$

if we start from the eliminant given by the third or fourth methods (§§ 12, 13).

[*Postscript.*—I take this opportunity of stating that some of the results obtained in my paper, "On a Form of the Eliminant of Two Quantics" (*Proceedings*, Ser. 2, Vol. 6, p. 468), are not new, as I imagined, but were given fifty years ago by Borchardt in *Crelle's Journal*, Bd. LVII. (1859), p. 111, "Ueber eine der Interpolation entsprechende Darstellung der Eliminations-Resultante." In particular, the expression of the eliminant as a determinant, as given on p. 468 of my paper, had been already given by Borchardt.

I owe this reference to Borchardt's paper to the kindness of Dr. T. Muir.]

Corrigenda to first paper, pp. 49–69 of this volume:—

P. 52, line 9 from bottom, should *read*

"$F(x, y, a, b) \equiv (\phi(x, y), \lambda\psi(x, b) + \mu\psi(a, y), \chi(a, b))/(x-a)(y-b)$."

P. 53, lines 18, 19, *read* "in which the highest power of x is x^{n+q-1}, and of y, y^{n+p-1}."

„ line 20, *for* "y^n," *read* "y^{n-1}."

„ line 21, *for* "x^n," *read* "x^{n-1}."

P. 67, line 11, *for* "M sets of points," *read* "a set of M points."

Corrigendum to this paper:—

P. 479, lines 9, 13, *for* "(A_{00}, B_{02}, C_{20})," *read* "(A_{11}, B_{02}, C_{20})."

INDEX.

INDEX OF PROCEEDINGS.

[*The numbers refer to pages.*]

Admissions of Members, vi, vii, ix.

Annual General Meeting (November, 1908), iv.

Auditor's Report, vi.

Council and Officers for the Session 1908–1909, iv.

De Morgan Medal (Presentation), iv.

Elections of Members, iv, vi, vii, ix.

Exchanges of Publications, xi.

International Catalogue, xiii.

Number of Members, iv.

Presents to Library, xi.

Treasurer's Report, iv, vi.

INDEX OF PAPERS READ AND COMMUNICATIONS MADE DURING THE SESSION NOVEMBER, 1908—JUNE, 1909.

[*The names of Authors are given and the numbers of the pages on which the titles of the papers, &c., will be found.*]

Bateman, H., v, viii, ix.

Bateman, H., and Cunningham, E., vii.

Bromwich, T. J. I'A., v.

Burnside, W., v, v.

Cunningham, A., vii.

Cunningham, E., viii.

Dickson, L. E., viii.

Dixon, A. C., v, vi, viii.

Dixon, A. L., v, vi, vi, viii, x.

Hammond, J., vii.

Hardy, G. H., v, vi, viii.

Harrison, W. J., v.

Hassé, H. R., ix.

Hilton, H., vii.

Hobson, E. W., v, v, vi, vi, vii, vii.

Jackson, F. H., v, v, vii.

Lamb, H., vi.

Larmor, J., viii.

Leathem, J. G., ix.

Littlewood, J. E., v, ix.

Macdonald, H. M., vii.

Morley, F., v.

O'Sullivan, A. C., v.

Pidduck, F. B., v.

Ram, Balak, vi.

Rogers, L. J., vi.

Salmon, W. H., vii, x.

Sommerville, D. M. Y., v.

Stuart, T., v, vi.

Tavani, F., viii.

Turnbull, H. W., ix.

Watson, G. N., vi, ix.

Western, A. E., ix.

Whipple, F. J. W., x.

Young, W. H., vi, viii, viii, ix.

INDEX OF PAPERS PUBLISHED IN THIS VOLUME ARRANGED ACCORDING TO NAMES OF AUTHORS.

[*The numbers refer to pages.*]

Bateman, H. The Conformal Transformations of a Space of Four Dimensions and their Applications to Geometrical Optics, 70.

Bromwich, T. J. I'A. An Asymptotic Formula for the Generalised Hypergeometric Series, 101.

Burnside, W. On the Theory of Groups of Finite Order (Presidential Address), 1.

——— On the Arithmetical Nature of the Coefficients in a Group of Linear Substitutions (Third Paper), 8.

Dickson, L. E. Modular Invariants of a General System of Linear Forms, 430.

Dixon, A. C. On Systems of Three Quaternary Quadrics that can be expressed by means of Five Squares, 150.

——— The Solution of Integral Equations, 314.

——— On the Relation between Pfaff's Problem and the Calculus of Variations, 422.

Dixon, A. L. The Eliminant of Three Quantics in Two Independent Variables, 49.

——— On Cubic Surfaces. The Reduction of a Quaternary Cubic from the Sum of Six Cubes to the Sum of Five, 389.

——— The Eliminant of Three Quantics in Two Independent Variables (Second Paper), 473.

Hardy, G. H. A Note on the Continuity or Discontinuity of a Function defined by an Infinite Product, 40.

——— The Theory of Cauchy's Principal Values (Fourth Paper), 181.

——— On an Integral Equation, 445.

——— Correction, xiv.

Harrison, W. J. The Influence of Viscosity and Capillarity on Waves of Finite Amplitude, 107.

Hobson, E. W. On the Second Mean Value Theorem of Integral Calculus, 14.

——— On the Representation of a Function by a Series of Legendre's Functions, 24.

——— Sir William Rowan Hamilton's Fluctuating Functions, 338.

——— On the Representation of a Function by Series of Bessel's Functions, 359.

——— Corrections, xiv.

Lamb, H. On the Theory of Waves Propagated Vertically in the Atmosphere, 122.

Littlewood, J. E. On the Dirichlet Series and Asymptotic Expansions of Integral Functions of Zero Order, 209.

Macdonald, H. M. Note on the Evaluation of a certain Integral containing Bessel's Functions, 142.

Pidduck, F. B. The Energy and Momentum of an Ellipsoidal Electron, 90.

Sommerville, D. M. Y. On certain Periodic Properties of Cyclic Compositions of Numbers, 263.

Young, W. H. On Differentials, 157.

——— On Implicit Functions and their Differentials, 397.

INDEX ACCORDING TO SUBJECTS.

[*The numbers refer to pages.*]

Cauchy's Principal Values. *See* Integrals, Definite.
Compositions of Numbers. *See* Partitions.
Cubic Surfaces: Dixon, A. C., 150; Dixon, A. L., 389
Differential Calculus, Principles of the: Young, W. H., 157, 397.
Differential Geometry. Conformal Transformations of Hyperspace: Bateman, H., 70.
Dirichlet Series. *See* Functions, Integral.
Electrons, Theory of: Pidduck, F. B., 90.
Elimination: Dixon, A. L., 49, 473.
Fluctuating Functions. *See* Harmonic Analysis.
Functions. Bessel's: Macdonald, H. M., 142; Hobson, E. W., 359, xiv. Hypergeometric: Bromwich, T. J. I'A., 101. Integral: Littlewood, J. E., 209. Legendre's: Hobson, E. W., 24.
Groups, Theory of: Burnside, W., 1, 8.
Harmonic Analysis: Hobson, E. W., 24, 338, 359, xiv.
Implicit Functions. *See* Differential Calculus.
Integral Calculus, Principles of the: Hobson, E. W., 14.
Integral Equations: Dixon, A. C., 314; Hardy, G. H., 445.
Integrals, Definite: Hardy, G. H., 181.
Numbers, Theory of. Modular Invariants of Systems of Linear Forms: Dickson, L. E., 430.
Optics, Geometrical: Bateman, H., 70.
Partitions: Sommerville, D. M. Y., 263.
Pfaffians: Dixon, A. C., 422.
Products, Infinite: Hardy, G. H., 40.
Quadric Surfaces, Systems of: Dixon, A. C., 150.
Quaternary Forms. *See* Cubic Surfaces *and* Quadric Surfaces.
Series, Theory of: Bromwich, T. J. I'A., 101; Hardy, G. H., xiv.
Variations, Calculus of: Dixon, A. C., 422.
Waves, On Liquids: Harrison, W. J., 107; in Air: Lamb, H., 122.

Printed by C. F. Hodgson & Son, 2 Newton Street, Kingsway, W.C.

BIBL. LONDIN. UNIV.